#	SECTION/DRAWING	ART./NOTE #	Nom
1	26 24 17	2.1	EATON SHORT CIRCUIT PROTECTIVE DEVICE STUDY
2	26 29 89	2.1	EATON CUTLER-HAMMER 9000X AF DRIVE
3	26 53 00	2.1	THOMAS & BETTS EXTRUDED ALUMINIUM PICTOGRAM ESIT SIGN
4	E2610-1	KN-1	ALLEN BRADLEY 1769-L33ER PROGRAMMABLE AUTOMATION CONTROLLER
5	E2610-1	KN-2	ROCKWELL AUTOMATION 1769-OW8 RELAY OUTPUT MODULE
6	E2610-1	KN3	ROCKWELL AUTOMATION 1769-IA16 AC INPUT MODULE
7	E2610-1	KN5	ROCKWELL AUTOMATION 1769-OF8C AND OF8V ANALOG OUTPUT MODULE
8	E2610-1	KN-6	ALLEN BRADLEY 1783-US08T ETHERNET UNMANAGED SWITCHES
9	E2610-1	KN7	ROCKWELL AUTOMATION 1769-IF8 ANALOG INPUT MODULE USER MANUAL
10	E2630-1	KN-3	ROCKWELL AUTOMATION 1769-OW8I AC-DC RELAY OUTPUT MODULE
11	E2634-1	SLOT 11	ROCKWELL AUTOMATION 1606-XLS480 SINGLE PHASE INPUT

Powering Business Worldwide

Electrical Services & Systems
940 Michelin, Suite #9
Laval, Quebec

ORDER NUMBER: Q13-115 CSVQ050334

SUBMITTED BY: TODD SAMPSON, ENG.

SHORT CIRCUIT, ARC FLASH, PROTECTIVE DEVICE COORDINATION STUDY REVISION 1.0 FOR WWTP PLANT UPGRADE PANGNIRTUNG, NU

JANUARY 2015

1.0 EXECUTIVE SUMMARY 1-1

1.1 Objectives 1-1
1.2 Results 1-1
1.3 Recommendations 1-2

2.0 SHORT-CIRCUIT ANALYSIS 2-1

2.1 Short-Circuit Objectives 2-1
2.2 System Modeling 2-1
2.3 Short-Circuit Results 2-2
2.4 Equipment Evaluation 2-2

3.0 PROTECTIVE DEVICE COORDINATION STUDY 3-1

3.1 Codes and Standards 3-1
3.2 Coordination Results 3-1
3.3 Coordination Comments 3-1
3.4 Coordination Recommendations 3-2
3.5 Time-Current Characteristic Plots 3-2

4.0 RECOMMENDED PROTECTIVE DEVICE SETTINGS 4-1

5.0 ARC FLASH HAZARD ANALYSIS 5-2

5.1 Introduction 5-2
5.2 Study Procedure 5-3
5.3 Arc Flash Hazard Analysis Results 5-4
5.4 Table 5.1 Heading Descriptions 5-5
5.5 Selection of Arc Rated PPE Based on Incident Energy Analysis 5-6
5.6 Arc Flash Hazard Analysis Results 5-8
5.7 Arc Flash Hazard Analysis Recommendations 5-9

Revision History

Revision #	Date Issued	Remarks
1.0	Jan 7, 2015	Initial Issue

1.0 EXECUTIVE SUMMARY

This report contains the results of analysis performed on the electrical distribution system for the **WWTP upgrade located in Pangnirtung, NU**. The purpose of this study is to evaluate new electrical equipment provided for this facility, as detailed in our objectives below.

The executive summary contains the description and guide to the rest of the report. In addition, it also contains the recommendations of the entire study.

1.1 Objectives

1. Short-Circuit Study

Perform a short-circuit study on the new and existing electrical distribution system shown in order to determine the available fault current at pertinent locations throughout the distribution system.

The available fault currents determined by the short-circuit study will be used in the coordination and device evaluation analysis.

2. Equipment Evaluation

Evaluate the short-circuit ratings of new protective devices and other distribution equipment supplied by Eaton under this contract, including existing equipment.

3. Coordination Study

Develop time-current coordination plots to derive coordinated settings for new protective devices, and select existing equipment.

4. Recommendations

Provide specific recommendations for improving the electrical distribution system performance and correcting any deficiencies found by the studies.

1.2 Results

1. Short-Circuit Study

Short-circuit currents were calculated for each bus shown on the one-line diagram in Appendix A. The system was modeled for worst-case fault currents.

See Appendix A and Sections 2 and 5 for more information.

2. Equipment Evaluation

The Equipment Evaluation is based on the power system worst-case short-circuit current configuration.

In summary of the tables in Section 2, all equipment passed the equipment evaluation.

The short-circuit withstand ratings of low voltage disconnect switches are not evaluated in this study. Care should be taken in order to ensure that these devices are applied within their UL listed short-circuit withstand ratings. The typical withstand ratings for Eaton disconnect switches (safety switches) range from 10,000 A to 200,000 A for certain fused types.

3. Testing and Preventative Maintenance

It is recommended that regularly scheduled testing and preventative maintenance be performed to ensure that the electrical distribution equipment continues to perform at an optimum level.

4. Coordination Study

The time-current coordination plots of the protective overcurrent devices are shown in Section 3. In developing the device settings, consideration was given to both isolation of faults, protection of cables, and protection of transformers.

Efforts were made to provide the best coordination possible with the protective devices supplied under this contract, and existing protective devices. It should be understood that selective coordination between two instantaneous trip units cannot be achieved for fault levels above the instantaneous pickup of the upstream device. As a result, some overlapping of curves cannot be avoided.

See Section 3 for more information and Section 4 for recommended device settings.

5. Suggested Protective Device Settings

Settings for the protective devices are shown in Section 4.

1.3 Recommendations

1. Overdutied Equipment

No equipment was found to be overdutied. See Section 2 for detailed short-circuit analysis.

2. Selective Coordination

See Section 3 for the detailed selective coordination evaluation.

2.0 SHORT-CIRCUIT ANALYSIS

The short-circuit study determines the fault currents that flow in the system during various fault conditions. The calculated fault currents are used in the device evaluation and coordination studies.

The short-circuit calculations were done using A_FAULT, a computer software package by SKM Systems Analysis. The short-circuit analysis performed by A_FAULT is based on IEEE Std C37.010™-1999, IEEE Std C37.5™-1979, and IEEE Std C37.13™-2008.

2.1 Short-Circuit Objectives

The objective of the short-circuit analysis is to calculate the maximum short-circuit currents produced by balanced three-phase and unbalanced faults at each bus shown on the study one-line diagram in Appendix A.

2.2 System Modeling

Short-circuit currents were calculated at each bus shown on the study one-line diagram found in Appendix A. The system was modeled for worst-case fault currents.

1. Utility Information:

Utility information was not received from the client. Maximum short circuit fault current values were estimated using a utility transformer of 3X100kVA and impedance of Z = 3.8%. Max utility 24,940V contribution estimated at 400MVA, X/R = 8.

2. System Information:

Input data used in this study was obtained from the following sources:

- Contract single line diagram, drawing# E2601-1
- Manufacturer's equipment drawings
- Client / Contractor response to inquiries

3. Assumptions:

The following assumptions were used in modeling the power system, and ensure conservative, worst-case results:

- Motor contribution estimated according to single line diagram
- System voltage is modeled at 100% nominal.
- All low voltage cable was modeled in magnetic conduit.
- All low voltage cable of unknown length was modeled as 10 feet long.
- Existing Square D Panel 'A' was modeled with type 'FA' breakers.

2.3 Short-Circuit Results

The results of the short-circuit analysis, are provided in table 2.2. The one-line diagram with referenced bus identification is included in Appendix A.

2.4 Equipment Evaluation

The purpose of the equipment evaluation is to compare the ***maximum*** calculated short-circuit currents to the short-circuit ratings of protective devices. The comparison is made in order to determine if the device can interrupt or withstand the available fault currents of the electrical system to which the device is applied.

The device evaluation follows the evaluation procedures outlined in IEEE Std C37.13-2008, IEEE Std C37.010-1999, IEEE Std C37.5-1979, IEEE Std C37.41™-2008, IEEE Std 1015™-2006 (Blue Book), and applicable ANSI, NEMA, and UL standards.

The results of the short-circuit equipment evaluation are summarized in Table 2.1. **No equipment has been found to be overdutied (failed).**

For equipment with series ratings, the maximum duty rating is calculated using the series rating instead of the individual device short-circuit rating. All short-circuit current values are reported in units of kA.

1. <u>For low voltage devices:</u>

The calculated short-circuit duty is reported under “Calc Isc (kA)" and the device short-circuit rating is reported under "Equip Isc (kA)". The calculated duty has been adjusted accordingly per the system X/R and device test X/R.

Table 2-1: Device Evaluation

Device/Location/Manufacturer	State	Description	Voltage (Volt) panel / equipment	Calculated short circuit current (kA)/Device Rating/ Device Series Rating
A - 100	Pass	FA	600	8.73 (*N1)
EXIST PANEL A-225		15-100A	600	14.00
SQUARE D		FA		
B - 200A	Pass	FDC	600	8.18
PANEL D - 400		15-225A	600	35.00
CUTLER-HAMMER		FDC		
B - PRIN 400	Pass	HKD	600	8.18
PANEL D - 400		100-400A	600	35.00
CUTLER-HAMMER		HKD		
B-U400	Pass	PowerPact L-Frame, 3.3	600	2.11 (*N1)
BUS-0007		LI, 400AS	600	14.00
SQUARE D		LD		
FD-ENT-400	Pass	NRS, 600V	600	8.24
BUS-0005		225-600A	600	10.00
GOULD SHAWMUT		NRS		

(*N1) System X/R higher than Test X/R, Calc INT kA modified based on low voltage factor.

Table 2.2 - Ansi Short Circuit Levels

Localisation	ANSI Isc 3P sym: (kA)	X/R	ANSI Isc SLG sym: (kA)	X/R
ATS-400-N	8.2	4.6	7.8	4.4
EXIST PANEL A-225	8.1	4.3	7.7	4.1
PANEL D - 400	8.2	4.6	7.8	4.4

3.0 PROTECTIVE DEVICE COORDINATION STUDY

The protective device coordination study determines overcurrent protective relay and circuit breaker settings in order to provide an optimal compromise between protection and selectivity.

3.1 Codes and Standards

The minimum protection requirements as outlined in the Canadian Electrical Code (CEC). ANSI and IEEE Standards were used as guidelines for protective device settings.

3.2 Coordination Results

Efforts were made to provide the best coordination possible with the protective devices supplied under this contract. Areas where breaker trip curves overlap indicate areas of possible non-selective breaker operation. Where possible, efforts were made to reduce non-selective breaker operation while maintaining adequate system protection. In some cases, because of device limitations, little can be done to improve selective coordination. Such device limitations include the fixed operating characteristic of a fuse, the built-in instantaneous or instantaneous “over-ride” elements of moulded case circuit breakers, and the limited instantaneous trip range of trip units with an instantaneous trip function. It should be understood that selective coordination between two instantaneous trip units cannot be achieved for fault levels above the instantaneous pickup of the upstream device. There is some overlapping of curves that cannot be avoided.

In cases involving redundant protective devices, non-selective breaker operation is of little or no concern. Protective devices are redundant if, regardless of which device opens, the same system outage occurs. Often, in order to improve overall system protection and coordination, redundant devices are intentionally set to overlap (i.e. non-selectively coordinate with) one another.

Adequate coordination is achieved using the recommended protective devices, with settings and ratings as listed in Section 4. The recommended adjustments would maximize coordination in an attempt to allow the various downstream devices to isolate faults without operation of the upstream devices. Although instantaneous trip devices provide the highest degree of protection, when applied in series they compromise selectivity at high-magnitude fault currents.

3.3 Coordination Comments

- The device time-current characteristics are truncated at maximum through-fault current for a downstream fault.

- Type AJT time delay Gould-Shawmut fuses were modeled for motor circuit protection where fuse type has not been specified.
- Full coordination was not possible with series fuses and thermal magnetic breakers or similar ratings. Breakers featuring adjustable electronic trip devices will be required for a full coordination (refer to TCC plots for further details).

3.4 Coordination Recommendations

All of the adjustable low voltage electronic trip and thermal magnetic circuit breakers should be tested and adjusted according to the recommended settings given in Section 4.

3.5 Time-Current Characteristic Plots

Refer to the following pages for the plotted coordination curves, which graphically indicate the degree of selectivity and protection obtained.

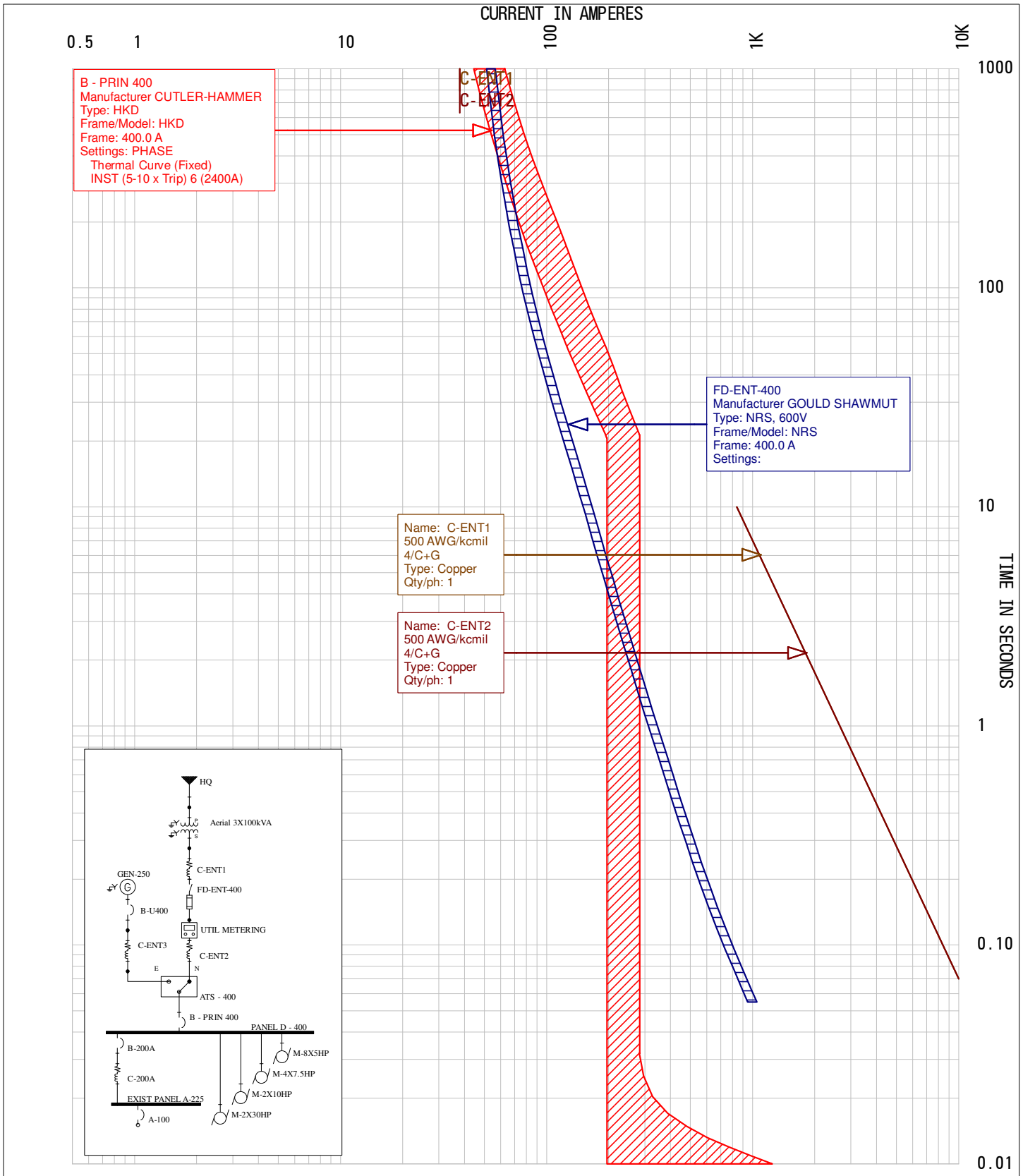

Waste Water Treatment
Plant Upgrade
PANGNIRTUNG, NU

Q13-115 CSVQ050334

Reference voltage : 600 volts
Current scale : x 10

tcc_1

Prepared by : T. Sampson, P.Eng.
Tel.: (450) 668-0853
Date : 7 Jan 2015

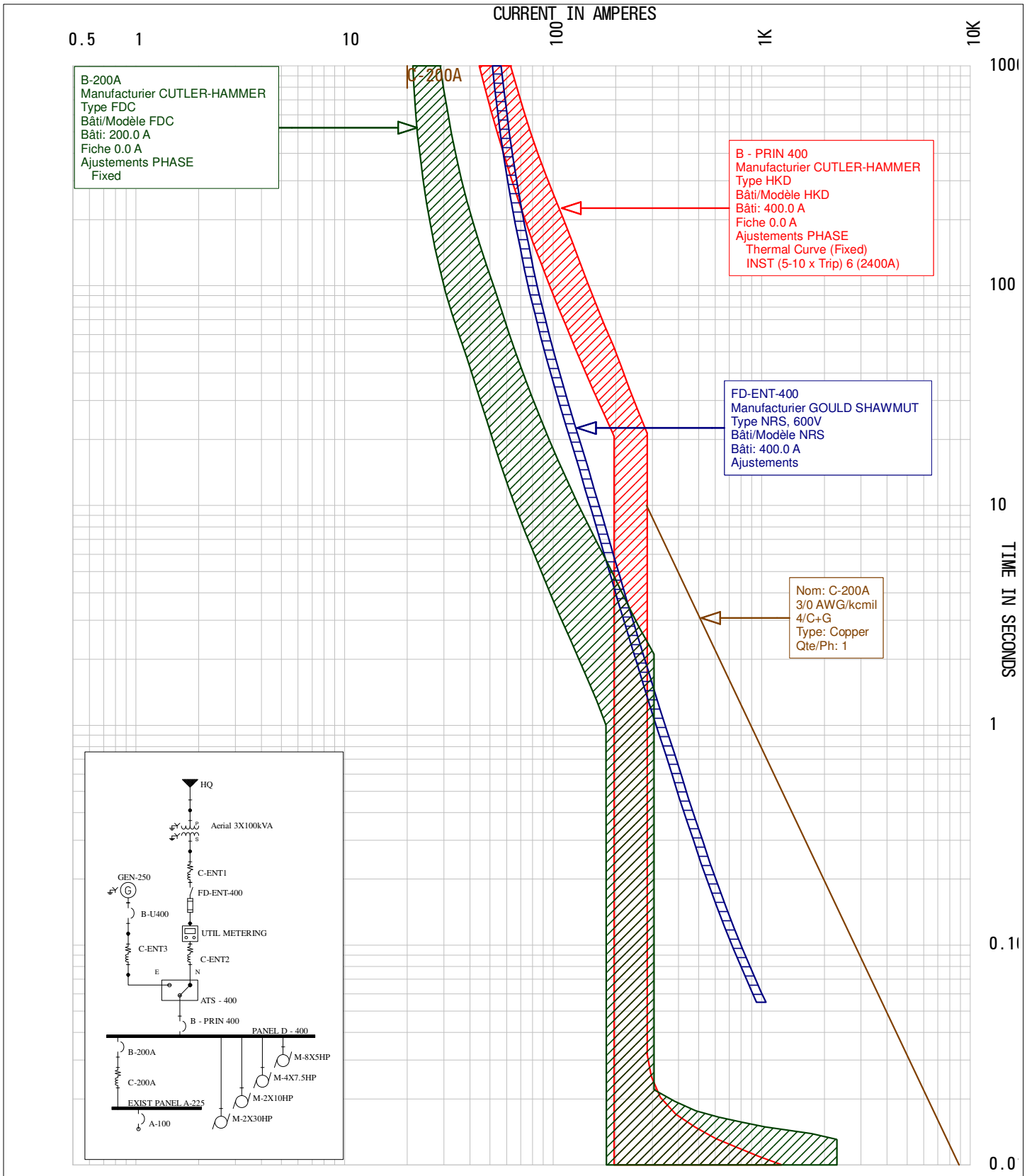

Waste Water Treatment
Plant Upgrade
PANGNIRTUNG, NU

Q13-115 CSVQ050334

Reference voltage : 600 volts
Current scale : x 10

tcc_2

Prepared by : T. Sampson, P.Eng.
Tel.: (450) 668-0853
Date : 7 Jan 2015

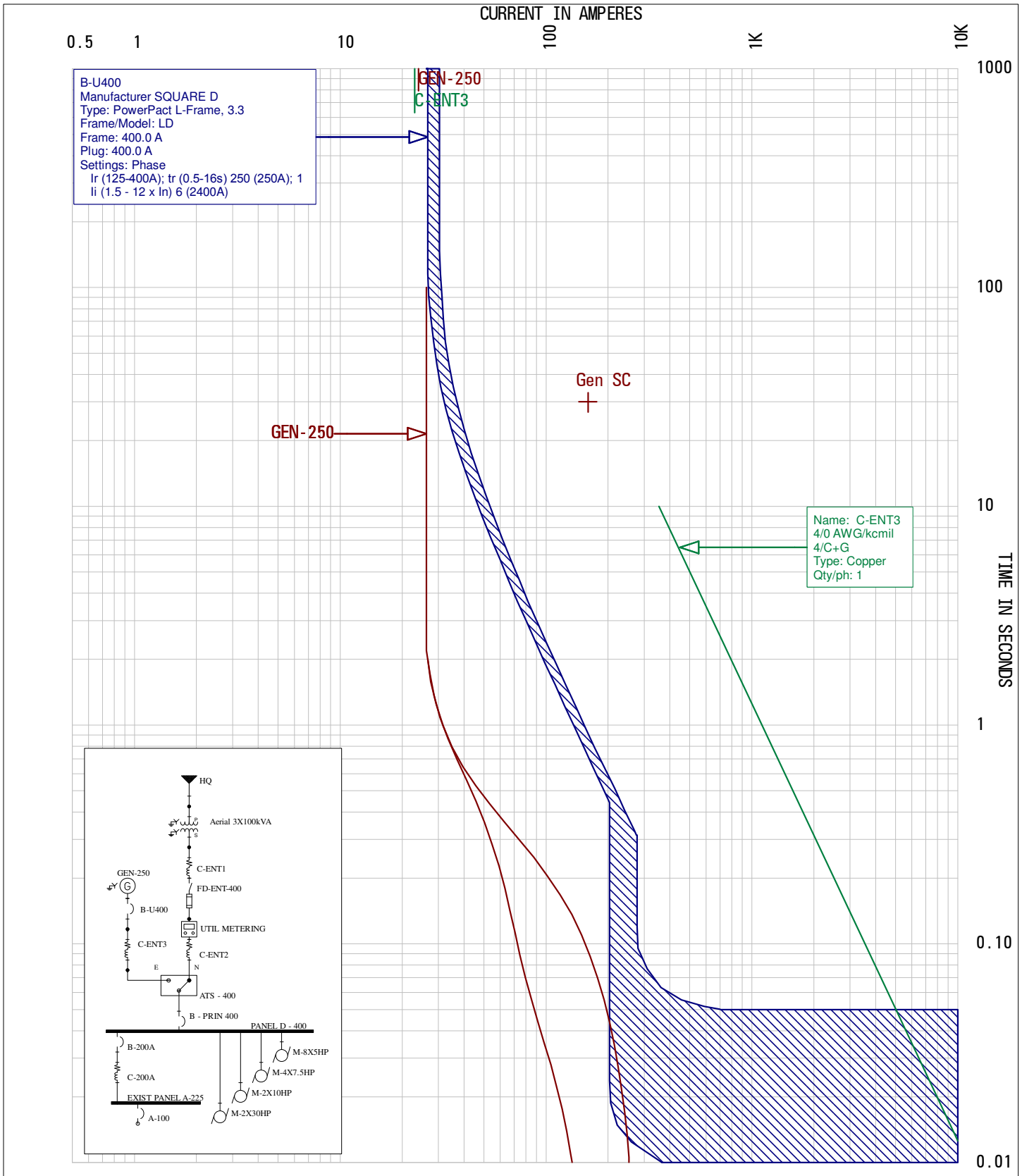

Waste Water Treatment
Plant Upgrade
PANGNIRTUNG, NU

Q13-115 CSVQ050334

Reference voltage : 600 volts
Current scale : x 10

tcc_3

Prepared by : T. Sampson, P.Eng.
Tel.: (450) 668-0853
Date : 7 Jan 2015

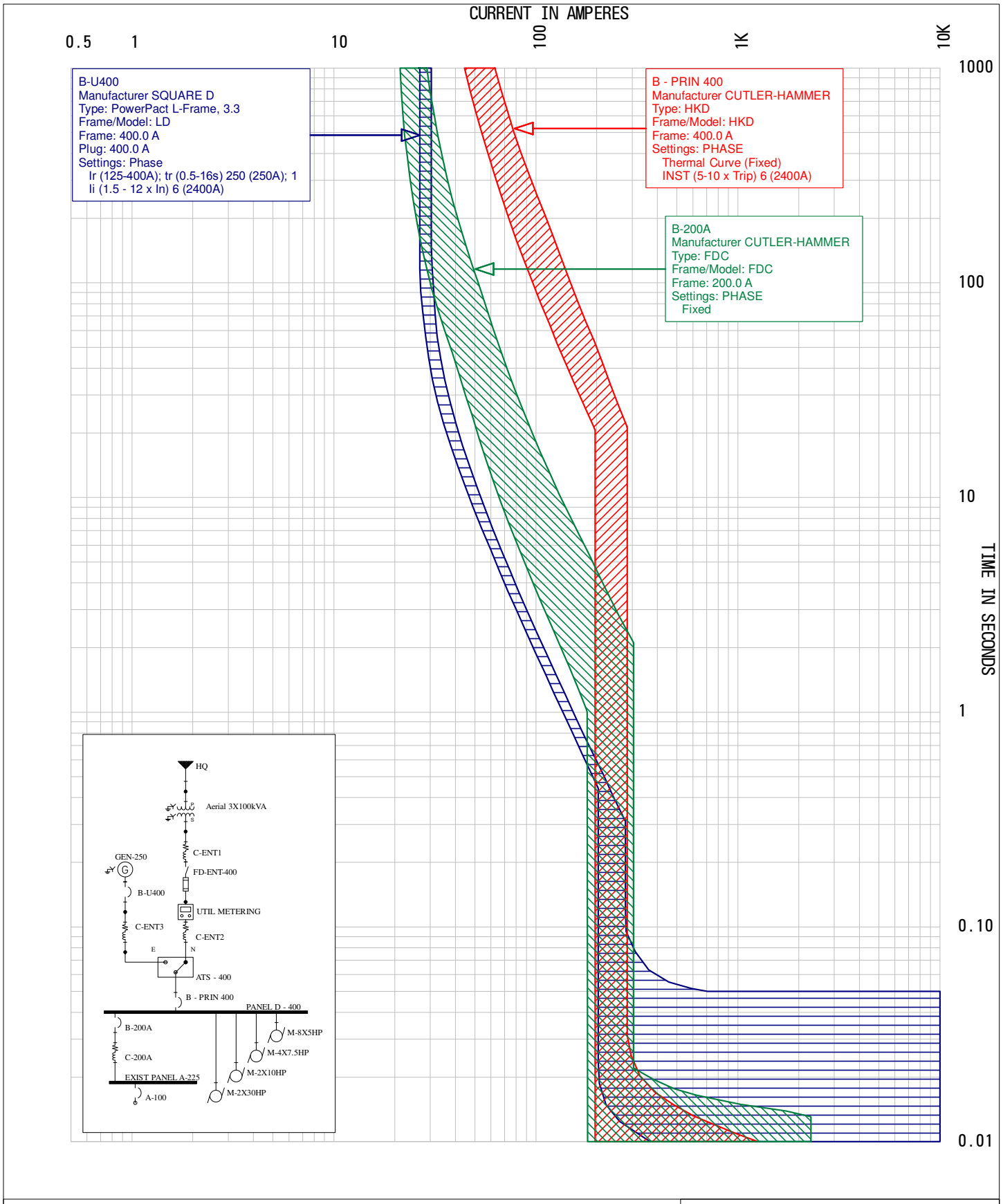

Waste Water Treatment
Plant Upgrade
PANGNIRTUNG, NU

Q13-115 CSVQ050334

Reference voltage : 600 volts
Current scale : x 10

tcc_4

Prepared by : T. Sampson, P.Eng.
Tel.: (450) 668-0853
Date : 7 Jan 2015

4.0 RECOMMENDED PROTECTIVE DEVICE SETTINGS

The following table shows a comprehensive summary of the recommended settings for the adjustable protective devices. Refer to the study one-line diagram in Appendix A for protective device identification.

Table 4.1 - Relay / Breaker / Fuse Settings

Name / Type	Manufacturer	Model	Frame / Sensor / Plug	Settings
A - 100 Thermal Magnetic	SQUARE D	FA	100.0A 100.0A	Fixed
B - 200A Thermal Magnetic	CUTLER-HAMMER	FDC	200.0A 200.0A	Fixed
B - PRIN 400 Thermal Magnetic	CUTLER-HAMMER	HKD	400.0A 400.0A	Thermal Curve (Fixed) INST (5-10 x Trip) 6 (2400A)
B-U400 Static Trip	SQUARE D	LD	400.0A 400.0A	Ir (125-400A); tr (0.5-16s) 250 (250A); 1 Ii (1.5 - 12 x In) 6 (2400A)
FD-ENT-400 Low Voltage Fuse	GOULD SHAWMUT	NRS	400.0A 400.0A	

5.0 ARC FLASH HAZARD ANALYSIS

This section of the report contains the interpretation for the Arc Flash Hazard Analysis. The calculations made in this arc flash hazard analysis conform to CSA Z462-12 and IEEE Std 1584. Actual heat and radiation exposure may be more or less than reflected in the analysis.

Only qualified personnel who are familiar with the installation and maintenance of electrical distribution equipment should perform work associated with such products. All recommendations of the manufacturer, warnings and cautions relating to the safety of personnel and equipment should be followed. All applicable health and safety laws, codes, standards and procedures should be adhered to. All equipment should be de-energized prior to any maintenance or service. All guidelines of CSA Z462-12 should be followed, and in particular appropriate personal protective equipment must be provided and worn.

Eaton will not be responsible for the misuse or misapplication of the information contained in this analysis. Those providing service for electrical equipment should contact an Electrical Engineering Services and Systems representative, or other qualified individual, if any questions arise.

5.1 Introduction

CSA Z462-12, Clause 4.3.3.2.1 states that appropriate safety-related work practices shall be determined before any person is exposed to the electrical hazards involved by using both shock hazard analysis and arc flash hazard analysis. CSA Z462-12, Clause 4.3.7.1 states that workers working in areas where electrical hazards are present shall be provided with and use protective equipment that is designed and constructed for the specific part of the body to be protected and for the work to be performed.

CSA Z462-12 and IEEE Std 1584 provide equations and methods to accurately calculate the arc flash boundary and incident energy at specific locations within a facility's electrical system. These results are used to determine the safe approach distance, hazard category, and personal protective equipment requirements for each location. Any location where work may be performed on live parts or near energized equipment is subject to the arc flash standards. Personal protective equipment used to guard against arc flash hazard should be considered the last line of defense. It is also important to note that the use of PPE is not intended to prevent all injuries from an arc flash. The goal of determining PPE levels using the arc flash hazard approach is to identify the level of protection required to prevent a second degree burn in the event of an arc flash while avoiding the use of more protection than is needed so as to minimize hazards of heat stress, reduced visibility and limited body movement.

Although the arc flash calculation procedure is based upon CSA Z462-12 and IEEE Std 1584 equations and methods, it is a relatively new approach to determining degree of required PPE. The calculations are derived from

theory and research involving arc current incident energy measurements conducted under a specific set of controlled test conditions. Therefore, calculation results may be more severe or less severe than the hazard presented by an actual arc flash exposure. Also, the arc flash calculations do not take into account hazards associated with the splattering of molten metal, explosively propelled pieces of equipment and air pressure shock waves.

The results of this arc flash hazard analysis are not intended to imply that personnel be permitted to work on exposed energize equipment or circuits.

Even if work is not being performed directly on energized equipment, it is important that the proper PPE be used during some load interruption actions, during visual verification of the state of disconnecting devices, and during lockout/tagout procedures.

Before the arc flash equations can be applied, a comprehensive short circuit and protective device coordination study must be completed to include all locations where work may be performed on or near energized components; e.g. motor control centres and power distribution panels. Since the short circuit current must be calculated at every pertinent location and the clearing time of each location's upstream protective device is required, the arc flash circuit model is more detailed and extends deeper into the facility electrical distribution system than is typical of a basic short circuit and protective device coordination study. Accurate fault currents and device clearing times are extremely important in deriving reliable results. A conservative (high) fault current value could yield a faster clearing time of a protective device, depending upon its curve shape, and the calculated incident energy may actually be less than the incident energy calculated for a lower magnitude of fault current and a longer clearing time.

5.2 Study Procedure

This study is done in accordance with CSA Z462-12 and IEEE 1584.

The intent of the CSA Z462-12 and IEEE 1584 standards is to establish calculations to determine an Approach Boundary and an associated PPE Hazard Level that will prevent the onset of a second-degree burn to the face and the torso of the worker. An incident energy of 1.2 cal/cm^2 represents the onset of a second-degree burn.

The Arc Flash analysis considers each medium and low voltage system location within the scope of the work. **IEEE Std 1584TM-2002 states that equipment below 240V need not be considered unless it involves at least one 125kVA or larger low-impedance transformer in its immediate power supply. Therefore, no detailed calculations will be performed for 120/208V locations supplied by a transformer smaller than 125kVA, however labels will be provided for these locations and will be labeled as hazard category zero.**

Utility fault contribution values were obtained and used in this study. The following scenarios involving different operating configurations were run:

Scenario #	Utility (Max, Min, Off)	GEN (Max, Off)	Motors (On, Off)
1	Max	Off	On
2	Max	Off	Off
3	Min	Off	On
4	Min	Off	Off
5	Off	Max	On
6	Off	Max	Off

From these different operating scenarios, the worst case incident energy was determined for each location analyzed. This worst case incident energy is reported in Table 5.1.

5.3 Arc Flash Hazard Analysis Results

The incident energy associated with an arc flash is dependent upon the following parameters:

- The maximum "bolted fault" three-phase short circuit current and associated protective device arcing currents available at the equipment location.
- The total protective device clearing time of the arcing fault.
- The gap between conductors based on IEEE 1584-2002, Table 2 below.

IEEE 1584-2002, Table 2—Classes of equipment and typical bus gaps	
Classes of equipment	***Typical bus gap mm (Inch)**
15 kV switchgear	152 (6)
5 kV switchgear	104 (4)
Low-voltage switchgear	32 (1.3)
Low-voltage MCCs and panelboards	25 (1)
Cable	13 (0.5)
Other	Not required

- The distance of the worker from the prospective arc based on IEEE 1584-2002, Table 3 below

IEEE 1584-2002, Table 3—Classes of equipment and typical working distances	
Classes of equipment	***Typical working distance mm (Inch)**
15 kV switchgear	910 (36)
5 kV switchgear	910 (36)
Low-voltage switchgear	610 (24)
Low-voltage MCCs and panelboards	455 (18)

Cable	455 (18)
Other	To be determined in field

*Typical working distance is the sum of the distance between the worker standing in front of the equipment, and from the front of the equipment to the potential arc source inside the equipment.

The Arc Flash Hazard Analysis results shown in Table 5.1 are based on a protective device clearing time that is capped at 2 seconds. This is based on IEEE Std 1584™-2002, Annex B, Instructions and Examples, page 76, which states *"If the time is longer than two seconds, consider how long a person is likely to remain in the location of the arc flash. It is likely that a person exposed to an arc flash will move away quickly if it is physically possible and two seconds is a reasonable maximum time for calculations. A person in a bucket truck or a person who has crawled into equipment will need more time to move away."*

5.4 Table 5.1 Heading Descriptions

Table 5.1 shows results of the analysis. The following column headings describe the results.

Column #1 - Bus Name: The names in this column correlate to the names implemented in the software system model (reference the one-line(s) included) These locations correspond to plant locations such as main switchboards, panelboards, enclosed breakers, etc.

Column #2 - Protective Device Name: This column lists the name of the device primarily responsible for clearing a potential fault as the associated bus. Again, these device names correlate to the system model.

Column #3 - Bus kV: The values in this column show the nominal voltage of the bus location noted in Column #1.

Column #4 - Bus Bolted Fault (kA): This column shows the bolted fault current available for the bus location referenced in Column #1. This current value corresponds to the system operating conditions that will result in the worst-case calculated value for incident energy. (See Column #11)

Column #5 - Prot Dev Bolted Fault Current: This column displays the portion of calculated bolted fault currents (See Column #4) that is contributed through the protective device referenced in Column #2.

Column #6 - Prot Dev Arcing Fault (kA): This column displays the portion of calculated arcing fault currents that is contributed through the protective device referenced in Column #2. These values demonstrate a reduction in available fault current due to the arc resistance.

Column #7 - Trip/Delay Time (sec): This column displays the length of time required by the protective device (See Column #2) to trip in the presence of the arcing fault current calculated in Column #6. For low voltage breakers and fuses, this time represents the total clearing time of the device. Time is capped at 2 seconds based on IEEE Std 1584™-2002, Annex B.

Column #8 - Breaker Opening Time (sec): For circuit breakers tripped by a relay, this column shows the opening time of the breaker. This time is added to the Trip time (See Column #7) to determine the total clearing time used in the calculation of incident energy. (See Column #11)

Column #9 - Arc Flash Boundary (in): This column displays the distance within which a person must be clothed in the appropriate PPE (Personal Protection Equipment.)

Column #10 - Working Distance (in): This distance indicates the typical working distance associated with the system location referenced in Column #1.

Column #11 - Incident Energy (cal/cm^2): Based on the arcing fault current, the total clearing time of the protective device, the bus bar gap, the grounding method, and the typical working distance, the column displays the results of the arc flash calculations at the reference location.

5.5 Selection of Arc Rated PPE Based on Incident Energy Analysis

The tables in this section document the incident energy exposure of the worker in cal/cm^2 based on a typical working distance of the worker's face and chest areas from a prospective arc source. Because incident energy increases as the distance from the arc flash decreases, additional PPE shall be used for any parts of the body that are closer than the distance at which the incident energy was determined.

Changes were made in CSA Z462-12 with regards to the selection of arc rated PPE based on incident energy analysis. This change reflects the fact that risk is not evaluated when incident energy calculations are performed. Therefore, Hazard Risk Category (HRC) information is not shown in the arc flash hazard report or on the arc flash hazard labels. CSA Z462-12, Clause 4.3.5.3.2, Note (2) states: *For information on selection of arc-rated clothing and other PPE, see Tables H.2 and H.3.*

Users of the calculated incident energy and associated working distance information in this report are encouraged to refer to CSA Z462-12 for information on selection of arc-rated clothing and other PPE. Listed below are items that are shown in CSA Z462-12 Tables H.2 and H.3.

Incident energy exposures up to and including 1.2 cal/cm^2

<u>Mandatory Items</u>

- Non-melting or untreated natural fibre long sleeve shirt and long pants or coverall
- Safety glasses
- Hearing protection

<u>Optional Items that can be used in addition (as needed) are:</u>

- Heavy duty leather gloves
- Rubber insulating gloves with leather protectors
- Heavy duty leather work shoes or boots
- Class G hard hat or Class E hard hat
- Faceshield that covers the face, neck, and chin

Incident energy exposures > 1.2 cal/cm^2 up to and including 12 cal/cm^2

Mandatory Items

- Arc-rated clothing system (with an arc rating appropriate to the anticipated incident energy exposure)
- Clothing underlayers (when used) must be either arc-rated or non-melting untreated natural fibre
- Safety glasses
- Hearing protection
- Heavy duty leather work shoes or boots
- Heavy duty leather gloves or rubber insulating gloves with leather protectors for exposures > 1.2 cal/cm^2 and ≤ 8 cal/cm^2
- Rubber insulating gloves with leather protectors for exposures > 8 cal/cm^2 and up to and including 12 cal/cm^2
- Class G hard hat or Class E hard hat
- Arc rated faceshield that covers the face, neck, and chin (with an arc rating appropriate to the anticipated incident energy exposure)
- Arc-rated balaclava (with an arc rating appropriate to the anticipated incident energy exposure)

Optional Items

- Arc-rated arc flash suit hood (with an arc rating appropriate to the anticipated incident energy exposure) instead of an arc rated faceshield and arc-rated balaclava
- Arc-rated gloves (with an arc rating appropriate to the anticipated incident energy exposure) instead of rubber insulating gloves with leather protectors for exposures > 8 cal/cm^2 and up to and including 12 cal/cm^2

Incident energy exposures > 12 cal/cm^2

Mandatory Items

- Arc-rated clothing system (with an arc rating appropriate to the anticipated incident energy exposure)
- Clothing underlayers (when used) must be either arc-rated or non-melting untreated natural fibre
- Safety glasses
- Hearing protection
- Heavy duty leather work shoes or boots

- Rubber insulating gloves with leather protectors (note that higher class rubber insulating gloves with leather protectors due to the increased material thickness provide increased arc flash protection)
- Class G hard hat or Class E hard hat
- Arc-rated arc flash suit hood (with an arc rating appropriate to the anticipated incident energy exposure)

Optional Items

- Arc-rated gloves (with an arc rating appropriate to the anticipated incident energy exposure) instead of rubber insulating gloves with leather protectors

5.6 Arc Flash Hazard Analysis Results

The incident energy associated with an arc flash is dependent upon the following parameters:

- The maximum "bolted fault" three-phase short-circuit current available at the equipment and the minimum fault level at which the arc will self-sustain.
- The total protective device clearing time (upstream of the prospective arc location) at the maximum short-circuit current and the minimum fault level at which the arc will self-sustain.
- The distance of the worker from the prospective arc for the task to be performed.

The arc flash hazard analysis results are based on a protective device clearing time that is capped at 2 seconds. This is based on IEEE Std 1584-2002 which states in Annex B, Instructions and Examples; *"If the time is longer than two seconds, consider how long a person is likely to remain in the location of the arc flash. It is likely that a person exposed to an arc flash will move away quickly if it is physically possible, and two seconds is a reasonable maximum time for calculations. A person in a bucket truck or a person who has crawled into equipment will need more time to move away."*

Two calculations are typically provided for labels on locations where there is adequate separation between the line side terminals of the main protective device, and the work location. The "Load Side" calculation provides the incident energy based on the main protective device clearing in the event of an arc flash incident. If the work location or task is such that the main breaker may not trip in the event of an arc flash incident, then the "Line Side" calculation for incident energy should be observed. This could occur if the main breaker is being racked-out, and a fault occurred on the line terminals. For this case, the next upstream device is the one that must clear the fault.

One should always remember that the terms "Line Side" and "Load Side" are always in reference to the main protective device (see example below).

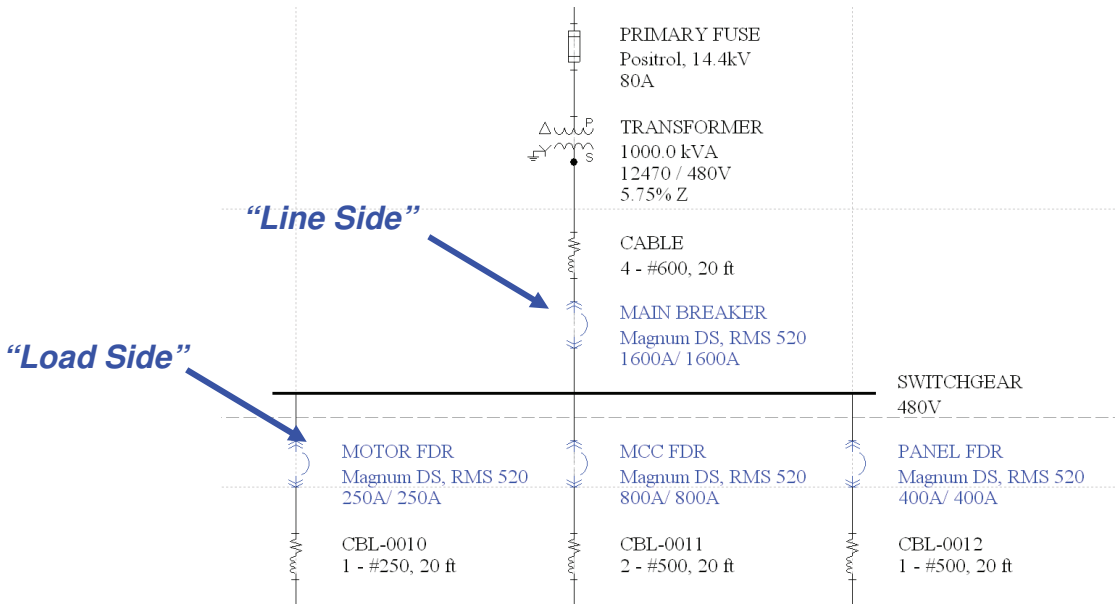

Figure 1: Line Side vs. Load Side

5.7 Arc Flash Hazard Analysis Recommendations

Only after the following recommendations have been taken into account are the results of this study valid and the arc flash labels can be applied.

1) All of the adjustable protective devices listed in Section 4 must be set per the recommended settings to achieve the results listed in Table 5.1.
2) The locations in Table 5.1 that have incident energy levels that are above 40 cal/cm^2. CSA Z462-2012 Clause 4.3.7.1 Note (2) implies that a much stronger emphasis on de-energization should be considered for these locations. Personal protective equipment combinations exist that can provide higher APTV ratings than 40 cal/cm^2, but it is our recommendation that live work at these locations be avoided. Labels for these locations will show "WARNING" instead of the incident energy level.
3) We recommend further study to reduce incident energy levels while maintaining good coordination for each location where the hazard is unacceptable.
4) Arc Flash labels, produced based on this report, should be applied to system equipment, ***only under the supervision of qualified and properly trained personnel.***

Table 5.1 - Arc Flash Summary Table

BUS NAME	Protective Device Name	Bus (kV)	Bus Bolted Fault (kA)	Protective Device Bolted Fault (kA)	Protective Device Arcing Fault (kA)	Breaker opening time (sec)	Equipment type	Arc Flash Boundary (in)	Working Distance (in)	Incident Energy (cal/cm2)	Category
ATS-400-N	FD-ENT-400	0,60	6,46	5,62	3,89	0.729	PNL	61	18	8,96	Level 3 (*N3) (*S3)
EXIST PANEL A-225	B - 200A	0,60	2,44	2,44	2,14	2	PNL	59	18	8,40	Level 3 (*N9) (*S5)
EXIST PANEL B	MaxTripTime @2.0s	0,21	n/a	n/a	n/a	n/a	PNL	18	18	1,20	Level 0 (*N15) (*S1)
PANEL C	MaxTripTime @2.0s	0,21	n/a	n/a	n/a	n/a	PNL	18	18	1,20	Level 0 (*N15) (*S1)
PANEL D - 400 (B - PRIN 400 LineSide)	FD-ENT-400	0,60	6,46	5,62	3,89	0.729	PNL	61	18	8,96	Level 3 (*N3) (*S3)

Category 0: 0 - 1.2 cal/cm^2
Category 1: 1.2 - 4.0 cal/cm^2
Category 2: 4.0 - 8.0 cal/cm^2
Category 3: 8.0 - 25.0 cal/cm^2
Category 4: 25.0 - 40.0 cal/cm^2
Danger > 40 cal/cm^2

S1: Scenario HQ max, motors on
S2: Scenario HQ max, motors off
S3: Scenario HQ min, motor on
S4: Scenario HQ min, motor off
S5: Generator on, motor on
S6: Generator on, motor off

*(*N3) - Arcing Current Low Tolerances Used*
*(*N9) - Max Arcing Duration Reached*
*(*N15) - Report as category 0 if fed by one transformer size < 125 kVA*

A. STUDY ONE-LINE DIAGRAM & CABLE LIST

See power system study one-line diagram and Cable List on the attached sheets.

Appendix A - Cable List

Cable	Qty/ph:	Calibre (AWG / Kcmil)	Type:		Length (ft):
C-200A	1	3/0	Copper	4/C+G	10.0
C-ENT1	1	500	Copper	4/C+G	10.0
C-ENT2	1	500	Copper	4/C+G	10.0
C-ENT3	1	4/0	Copper	4/C+G	10.0

1Line001
Q13-115 CSVQ050334
12 Jan 2015

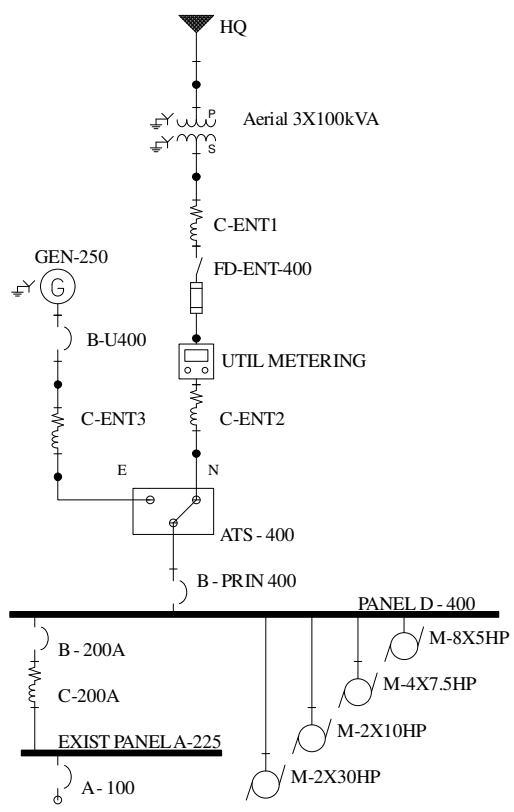

Waste Water Treatment
Plant Upgrade
PANGNIRTUNG, NU

THIS PAGE WAS INTENTIONALLY LEFT BLANK

THIS PAGE WAS INTENTIONALLY LEFT BLANK

Cutler-Hammer

9000X AF Drives

User Manual

October 2007
Supersedes September 2006

October 2007

Important Notice – Please Read

The product discussed in this literature is subject to terms and conditions outlined in Eaton Electrical Inc. selling policies. The sole source governing the rights and remedies of any purchaser of this equipment is the relevant Eaton Electrical Inc. selling policy.

NO WARRANTIES, EXPRESS OR IMPLIED, INCLUDING WARRANTIES OF FITNESS FOR A PARTICULAR PURPOSE OR MERCHANTABILITY, OR WARRANTIES ARISING FROM COURSE OF DEALING OR USAGE OF TRADE, ARE MADE REGARDING THE INFORMATION, RECOMMENDATIONS AND DESCRIPTIONS CONTAINED HEREIN. In no event will Eaton Electrical Inc. be responsible to the purchaser or user in contract, in tort (including negligence), strict liability or otherwise for any special, indirect, incidental or consequential damage or loss whatsoever, including but not limited to damage or loss of use of equipment, plant or power system, cost of capital, loss of power, additional expenses in the use of existing power facilities, or claims against the purchaser or user by its customers resulting from the use of the information, recommendations and descriptions contained herein.

The information contained in this manual is subject to change without notice.

Cover Photo: Cutler-Hammer® SVX9000/SPX9000 AF Drives.

October 2007

Table of Contents

LIST OF FIGURES iii
LIST OF TABLES v
SAFETY vii
Definitions and Symbols vii
Hazardous High Voltage vii
Warnings and Cautions viii
CHAPTER 1 — OVERVIEW 1-1
How to Use This Manual 1-1
Receiving and Inspection. 1-1
Open SVX9000/SPX9000 Catalog Numbers. 1-2
CHAPTER 2 — MOUNTING 2-1
Space Requirements 2-1
Environmental Requirements 2-2
Standard Mounting Instructions 2-2
CHAPTER 3 — POWER WIRING 3-1
Guidelines 3-1
UL Compatible Cable Selection and Installation 3-2
UL Compatible Cable Selection and Installation with Breaker. 3-6
Installation Instructions 3-8
Standard Wiring Diagrams and Terminal Locations 3-11
Power and Motor Wiring Terminal Photos. 3-14
Checking the Cable and Motor Insulation 3-20
CHAPTER 4 — CONTROL WIRING 4-1
General Information. 4-1
Control Wiring Details 4-3
CHAPTER 5 — MENU INFORMATION 5-1
Keypad Operation 5-1
Menu Navigation 5-3
CHAPTER 6 — START-UP 6-1
Safety Precautions 6-1
Overview. 6-2
Sequence of Operation to Commission an Induction Motor 6-3
Manual Tuning of the SVX9000/SPX9000 6-6
Closed Loop Vector Control Manual Tuning (SPX9000 Only). 6-11
APPENDIX A — TECHNICAL DATA A-1
General A-1
Specifications A-2
Power Ratings. A-4
Power Loss and Switching Frequency A-7
Dimensions. A-11
EMC Capability A-27
Declaration of Conformity A-27
Warranty and Liability Information. A-28
APPENDIX B — FAULT AND WARNING CODES B-1
APPENDIX C — TROUBLESHOOTING CHARTS USING FAULT CODES C-1
APPENDIX D — SPARE PARTS D-1
Series Option Board Kits D-1
Drive Options D-4
Spare Units & Replacement Parts for 9000X Drives D-5

List of Figures

Figure 2-1: Mounting Space Requirements. 2-1
Figure 3-1: Input Power and Motor Cable Stripping and Wire Lengths 3-8
Figure 3-2: Wiring Plate 3-9
Figure 3-3: Ground Terminal Locations 3-10
Figure 3-4: Cable Protection Plate 3-10
Figure 3-5: Principle Wiring Diagram of SVX9000/SPX9000 Power Unit, FR4 to FR5 and FR6 3-11
Figure 3-6: Principle Wiring Diagram of SVX9000/SPX9000 Power Unit, FR6, FR7 and FR8 3-12
Figure 3-7: Principle Wiring Diagram of SVX9000/SPX9000 Power Unit, FR9 to FR10 3-13
Figure 3-8: FR4 Power and Motor Wiring Terminals 3-14
Figure 3-9: FR5 Power and Motor Wiring Terminals 3-15
Figure 3-10: FR6 Power and Motor Wiring Terminals 3-16
Figure 3-11: FR7 Power and Motor Wiring Terminals 3-17
Figure 3-12: FR8 Power and Motor Wiring Terminals 3-18
Figure 3-13: FR9 Power and Motor Wiring Terminals 3-19
Figure 4-1: Option Board Slots 4-1
Figure 4-2: Option Board A9 Wiring Diagram 4-3
Figure 4-3: Option Board A9 Jumper Location and Settings 4-5
Figure 4-4: Option Board A2 Wiring Diagram 4-5
Figure 4-5: Option Board A2 Terminal Locations 4-6
Figure 4-6: Positive/Negative Logic 4-6
Figure 5-1: Keypad and Display 5-1
Figure 5-2: Main Menu Navigation 5-4
Figure 5-3: Parameter Menu Structure Example 5-5
Figure 5-4: Keypad Control Menu 5-6
Figure 5-5: Active Fault Display Example 5-7
Figure 5-6: Sample Fault History Display 5-9
Figure 5-7: System Menu Structure 5-10
Figure 5-8: Expander Board Menu Structure 5-18
Figure 5-9: Digital Inputs — DIN1, DIN2, DIN3 Status 5-19
Figure 5-10: Digital Inputs — DIN4, DIN5, DIN6 Status 5-19
Figure 5-11: Digital and Relay Outputs — DO1, RO1, RO2 Status 5-19
Figure 5-12: Operate Menu Navigation 5-21
Figure 6-1: Open Loop Tuning 6-6
Figure 6-2: Motor Current after V/f-Curve Tuning 6-8
Figure 6-3: Motor Equivalent Circuit 6-9
Figure 6-4: Left: OL Speed Control Off. Right: OL Speed Control ON. 6-10
Figure 6-5: Closed Loop Motor Voltage 6-12
Figure 6-6: Closed Loop Current Limit 6-13
Figure A-1: SVX9000/SPX9000 Block Diagram A-2
Figure A-2: Power Loss as Function of Switching Frequency — 3/4 – 3 hp 230V, 1 – 5 hp 480V A-7
Figure A-3: Power Loss as Function of Switching Frequency — 5 – 7-1/2 hp 230V, 7-1/2 – 15 hp 480V A-8
Figure A-4: Power Loss as Function of Switching Frequency — 10 – 15 hp 230V, 20 – 30 hp 480V A-8
Figure A-5: Power Loss as Function of Switching Frequency — 20 – 30 hp 230V, 40 – 60 hp 480V A-9

List of Figures (Continued)

Figure A-6: Power Loss as Function of Switching Frequency — 75 – 125 hp 480V A-9
Figure A-7: Power Loss as Function of Switching Frequency — 150 – 200 hp 480V A-10
Figure A-8: NEMA Type 1 Enclosure Dimensions A-11
Figure A-9: NEMA Type 1 and 12 with Flange Kit, FR4, FR5 and FR6 Enclosure Dimensions A-12
Figure A-10: NEMA Type 1 with Flange Kit, FR7 and FR8 Enclosure Dimensions A-13
Figure A-11: FR9 Enclosure Dimensions A-14
Figure A-12: FR9 with Flange Kit Enclosure Dimensions A-15
Figure A-13: SPX9000 Dimensions, FR10 Open Chassis A-16
Figure A-14: SPX9000 Dimensions, FR11 Open Chassis A-17
Figure A-15: SPX9000 Dimensions, FR13 Open Chassis Inverter A-18
Figure A-16: SPX9000 Dimensions, FR13 Open Chassis Converter A-19
Figure A-17: SPX9000 Dimensions, FR13 Open Chassis Converter — 900/1000 hp 480V A-20
Figure A-18: AC Choke (CHK0650) Dimensions A-21
Figure A-19: AC Choke (CHK0520) Dimensions A-22
Figure A-20: AC Choke (CHK0400) Dimensions A-23
Figure A-21: AC Choke (CHK0261) Dimensions A-24
Figure A-22: Control Unit Dimensions A-25
Figure A-23: Control Unit with Star-Coupler Board, FR12 or FR14 Only A-26
Figure C-1: F1 — Overcurrent C-1
Figure C-2: F2 — Overvoltage C-2
Figure C-3: F3 — Earth Fault C-3
Figure C-4: F5 — Charging Switch C-4
Figure C-5: F6 — Emergency Stop C-5
Figure C-6: F7 — Saturation Trip C-6
Figure C-7: F8 — System Fault C-7
Figure C-8: F9 — Undervoltage C-8
Figure C-9: F10 — Input Line Supervision C-9
Figure C-10: F11 — Output Phase Supervision C-10
Figure C-11: F12 — Brake Chopper Supervision C-11
Figure C-12: F13 — Frequency Converter Under Temperature C-12
Figure C-13: F14 — Frequency Converter Over Temperature C-13
Figure C-14: F15 — Motor Stalled C-14
Figure C-15: F16 — Motor Over Temperature C-15
Figure C-16: F17 — Motor Under Load C-16
Figure C-17: F22 — Param Fault C-17
Figure C-18: F24 — Counter Fault C-18
Figure C-19: F25 — Microprocessor Watchdog Fault C-18
Figure C-20: F31 — IGBT Temperature (Hardware) C-19
Figure C-21: F32 — Fan Cooling C-20
Figure C-22: F36 — Control Unit C-21
Figure C-23: F37 — Device Change (Indication Only) C-21
Figure C-24: F38 — Device Added (Indication Only) C-22
Figure C-25: F39 — Device Removed (Indication Only) C-22
Figure C-26: F40 — Device Unknown C-23
Figure C-27: F41 — IGBT Temperature C-24
Figure C-28: F42 — Brake Resistor Over Temperature C-25

List of Figures (Continued)

Figure C-29: F44 — DevParChange C-26
Figure C-30: F45 — DevParAdded C-27
Figure C-31: F50 — Analog Input Iin < 4 mA C-28
Figure C-32: F51 — External Fault C-29
Figure C-33: F52 — Keypad Communication Fault C-30
Figure D-1: 9000X Series Option Boards D-1

List of Tables

Table 1-1: SVX9000/SPX9000 AF Drive Catalog Numbering System 1-2
Table 2-1: Space Requirements for Mounting a SVX9000/SPX9000 Drive 2-1
Table 2-2: Cooling Airflow Requirements 2-2
Table 3-1: Cable Spacings 3-1
Table 3-2: 40°C Cable and Fuse Sizes — 230V Ratings 3-2
Table 3-3: 40°C Cable and Fuse Sizes — 480V Ratings 3-3
Table 3-4: 40°C Cable and Fuse Sizes — 575V Ratings 3-4
Table 3-5: Cable and Busbar Sizes, SPX FR10 – FR12 — 480V Ratings 3-4
Table 3-6: Cable and Busbar Sizes, SPX FR13 – FR14 — 480V Ratings 3-5
Table 3-7: Cable and Busbar Sizes, SPX FR10 – FR12 — 575V Ratings 3-5
Table 3-8: Cable and Busbar Sizes, SPX FR13 – FR14 — 575V Ratings 3-5
Table 3-9: Maximum Symmetrical Supply Current 3-5
Table 3-10: Cable and Breaker ② Sizes – 230V Ratings 3-6
Table 3-11: Cable and Breaker ④ Sizes – 480V Ratings 3-6
Table 3-12: Cable and Breaker ② Sizes – 575V Ratings 3-7
Table 3-13: Power Connection Tightening Torque. 3-8
Table 3-14: Power and Motor Cable Stripping Lengths 3-9
Table 4-1: Tightening Torques of Terminals 4-2
Table 4-2: Control Wiring Instructions 4-2
Table 4-3: Option Board A9 Terminal Descriptions 4-4
Table 4-4: Option Board A2 Terminal Descriptions 4-6
Table 5-1: LCD Status Indicators 5-1
Table 5-2: LED Status Indicators 5-2
Table 5-3: Navigation Buttons 5-2
Table 5-4: Fault Types 5-8
Table 5-5: Fault Time Data 5-8
Table 5-6: Total Counters 5-15
Table 5-7: Trip Counters 5-16
Table 5-8: Software Information 5-16
Table 5-9: Application Information 5-16
Table 5-10: Hardware Information 5-17
Table 5-11: Expander Board Information 5-17
Table 5-12: Monitoring Menu Items — Standard Application Example 5-19
Table 5-13: Operate Menu Items — Standard Application Example 5-20
Table A-1: SVX9000/SPX9000 Drive Specifications A-2
Table A-2: Output Power Ratings — 230V IH A-4
Table A-3: Output Power Ratings — 480V IH A-5
Table A-4: Output Power Ratings — 480V SPX FR10 – FR14 . . . . . A-5
Table A-5: Output Power Ratings — 575V IH A-6
Table A-6: Output Power Ratings — 575V SPX FR10 – FR14 . . . . . A-6
Table A-7: NEMA Type 1/Type 12 Enclosure Dimensions. A-11
Table A-8: FR4, FR5 and FR6 with Flange Kit Enclosure Dimensions A-12
Table A-9: FR7 and FR8 with Flange Kit Enclosure Dimensions. A-13

List of Tables (Continued)

Table A-10: FR9 Enclosure Dimensions. A-14
Table A-11: FR9 with Flange Kit Enclosure Dimensions A-15
Table A-12: Dimensions for SPX9000, FR10 Open Chassis A-16
Table A-13: Dimensions for SPX9000, FR11 Open Chassis A-17
Table A-14: Dimensions for SPX9000, FR13 Open Chassis Inverter A-18
Table A-15: FR13 — Number of Input Units A-19
Table A-16: Dimensions for SPX9000, FR13 Open Chassis Converter A-19
Table A-17: FR13 — Number of Input Units A-20
Table A-18: Dimensions for SPX9000, FR13 Open Chassis Converter — 900/1000 hp 480V A-20
Table B-1: Fault Codes B-1
Table D-1: Option Board Kits D-1
Table D-2: Control Panel Factory Options D-4
Table D-3: 9000X Spare Units D-5
Table D-4: Replacement Parts — 9000X Drives, 208 – 240V D-5
Table D-5: Replacement Parts — FR4 – FR9 9000X Drives, 380 – 500V D-7
Table D-6: Replacement Parts — FR10 – FR12 9000X Drives, 380 – 500V D-9
Table D-7: Replacement Parts — FR6 – FR9 9000X Drives, 525 – 690V D-11
Table D-8: Replacement Parts — FR10 – FR12 9000X Drives, 525 – 690V D-13
Table D-9: Power Module Catalog Number Matrix D-14
Table A-10: FR9 Enclosure Dimensions. A-14

October 2007

Safety

Definitions and Symbols

WARNING

This symbol indicates high voltage. It calls your attention to items or operations that could be dangerous to you and other persons operating this equipment. Read the message and follow the instructions carefully.

This symbol is the "Safety Alert Symbol." It occurs with either of two signal words: CAUTION or WARNING, as described below.

WARNING

Indicates a potentially hazardous situation which, if not avoided, can result in serious injury or death.

CAUTION

Indicates a potentially hazardous situation which, if not avoided, can result in minor to moderate injury, or serious damage to the equipment. The situation described in the CAUTION may, if not avoided, lead to serious results. Important safety measures are described in CAUTION (as well as WARNING).

Hazardous High Voltage

WARNING

Motor control equipment and electronic controllers are connected to hazardous line voltages. When servicing drives and electronic controllers, there may be exposed components with housings or protrusions at or above line potential. Extreme care should be taken to protect against shock.

- Stand on an insulating pad and make it a habit to use only one hand when checking components.
- Always work with another person in case an emergency occurs.
- Disconnect power before checking controllers or performing maintenance.
- Be sure equipment is properly grounded.
- Wear safety glasses whenever working on electronic controllers or rotating machinery.

Warnings and Cautions

Read this manual thoroughly and make sure you understand the procedures before you attempt to install, set up, or operate this Cutler-Hammer® SVX9000/SPX9000 Adjustable Frequency Drive from Eaton's electrical business.

Warnings

WARNING

Be sure to ground the unit following the instructions in this manual. Ungrounded units may cause electric shock and/or fire.

WARNING

This equipment should be installed, adjusted, and serviced by qualified electrical maintenance personnel familiar with the construction and operation of this type of equipment and the hazards involved. Failure to observe this precaution could result in death or severe injury.

WARNING

Components within the SVX9000/SPX9000 power unit are live when the drive is connected to power. Contact with this voltage is extremely dangerous and may cause death or severe injury.

WARNING

Line terminals (L1, L2, L3), motor terminals (U, V, W) and the DC-link/brake resistor terminals (-/+) are live when the drive is connected to power, even if the motor is not running. Contact with this voltage is extremely dangerous and may cause death or severe injury.

WARNING

Even though the control I/O-terminals are isolated from line voltage, the relay outputs and other I/O-terminals may have dangerous voltage present even when the drive is disconnected from power. Contact with this voltage is extremely dangerous and may cause death or severe injury.

WARNING

The SVX9000/SPX9000 drive has a large capacitive leakage current during operation, which can cause enclosure parts to be above ground potential. Proper grounding, as described in this manual, is required. Failure to observe this precaution could result in death or severe injury.

WARNING

Before applying power to the SVX9000/SPX9000 drive, make sure that the front and cable covers are closed and fastened to prevent exposure to potential electrical fault conditions. Failure to observe this precaution could result in death or severe injury.

WARNING

An upstream disconnect/protective device must be provided as required by the National Electric Code (NEC). Failure to follow this precaution may result in death or severe injury.

WARNING

Before opening the SVX9000/SPX9000 drive covers:

- Disconnect all power to the SVX9000/SPX9000 drive.
- Wait a minimum of 5 (five) minutes after all the lights on the keypad are off. This allows time for the DC bus capacitors to discharge.
- A hazard voltage may still remain in the DC bus capacitors even if the power has been turned off. Confirm that the capacitors have fully discharged by measuring their voltage using a multimeter set to measure DC voltage.

Failure to follow the above precautions may cause death or severe injury.

Cautions

CAUTION

Do not perform any meggar or voltage withstand tests on any part of the SVX9000/SPX9000 drive or its components. Improper testing may result in damage.

CAUTION

Prior to any tests or measurements of the motor or the motor cable, disconnect the motor cable at the SVX9000/SPX9000 output terminals (U, V, W) to avoid damaging the SVX9000/SPX9000 during motor or cable testing.

CAUTION

Do not touch any components on the circuit boards. Static voltage discharge may damage the components.

CAUTION

Any electrical or mechanical modification to this equipment without prior written consent of Eaton will void all warranties and may result in a safety hazard in addition and voiding of the UL listing.

CAUTION

Install the SVX9000/SPX9000 drive on flame-resistant material such as a steel plate to reduce the risk of fire.

CAUTION

Install the SVX9000/SPX9000 drive on a perpendicular surface that is able to support the weight of the drive and is not subject to vibration, to lessen the risk of the drive falling and being damaged and/or causing personal injury.

CAUTION

Prevent foreign material such as wire clippings or metal shavings from entering the drive enclosure, as this may cause arcing damage and fire.

CAUTION

Install the SVX9000/SPX9000 drive in a well-ventilated room that is not subject to temperature extremes, high humidity, or condensation, and avoid locations that are directly exposed to sunlight, or have high concentrations of dust, corrosive gas, explosive gas, inflammable gas, grinding fluid mist, etc. Improper installation may result in a fire hazard.

Motor and Equipment Safety

CAUTION

Before starting the motor, check that the motor is mounted properly and aligned with the driven equipment. Ensure that starting the motor will not cause personal injury or damage equipment connected to the motor.

CAUTION

Set the maximum motor speed (frequency) in the SVX9000/SPX9000 drive according to the requirements of the motor and the equipment connected to it. Incorrect maximum frequency settings can cause motor or equipment damage and personal injury.

CAUTION

Before reversing the motor rotation direction, ensure that this will not cause personal injury or equipment damage.

CAUTION

Make sure that no power correction capacitors are connected to the SVX9000/SPX9000 output or the motor terminals to prevent SVX9000/SPX9000 malfunction and potential damage.

CAUTION

Make sure that the SVX9000/SPX9000 output terminals (U, V, W) are not connected to the utility line power as severe damage to the SVX9000/SPX9000 may occur.

Chapter 1 — Overview

This chapter describes the purpose and contents of this manual, the receiving inspection recommendations and the Cutler-Hammer® SVX9000/SPX9000 catalog numbering system.

How to Use This Manual

The purpose of this manual is to provide you with information necessary to install, set and customize parameters, start up, troubleshoot and maintain the Cutler-Hammer SVX9000/SPX9000 AF Drives by Eaton's electrical business. To provide for safe installation and operation of the equipment, read the safety guidelines at the beginning of this manual and follow the procedures outlined in the following chapters before connecting power to the SVX9000/SPX9000. Keep this user manual handy and distribute to all users, technicians and maintenance personnel for reference along with the appropriate application manual.

Chapter 1 – Overview is the chapter you are reading now.

Chapter 2 – Mounting

Chapter 3 – Power Wiring

Chapter 4 – Control Wiring

Chapter 5 – Menu Information

Chapter 6 – Start-Up

Appendix A – Technical Data

Appendix B – Fault and Warning Codes

Appendix C – Troubleshooting Charts

Appendix D – Spare Parts

Receiving and Inspection

This SVX9000/SPX9000 AC drive has met a stringent series of factory quality requirements before shipment. It is possible that packaging or equipment damage may have occurred during shipment. After receiving your SVX9000/SPX9000 drive, please check for the following:

- Check to make sure that the package(s) includes the proper drive, the User Manual, and rubber conduit covers, screws, conduit plate and ground straps.
- Inspect the unit to ensure it was not damaged during shipment.
- Make sure that the part number indicated on the nameplate corresponds with the Catalog Number on your order.

If shipping damage has occurred, please contact and file a claim with the carrier involved immediately.

If the delivery does not correspond to your order, please contact your Eaton representative.

Note: Do not destroy the packing. The template printed on the protective cardboard can be used for marking the mounting points of the SVX9000/SPX9000 AF Drives on the wall or cabinet.

Open SVX9000/SPX9000 Catalog Numbers

Table 1-1: SVX9000/SPX9000 AF Drive Catalog Numbering System

SVX 007A 1 - 4 A 1 B 1 _ _ _

Product

SVX = SVX Industrial Drive
SPX = SPX Drive

Horsepower (I_H) ①②

F07 = 3/4	**150** = 150
001 = 1	**200** = 200
F15 = 1-1/2	**250** = 250
002 = 2	**300** = 300
003 = 3	**350** = 350
004 = 5 I_L Only	**400** = 400
005 = 5	**500** = 500
006 = 7-1/2 I_L Only	**550** = 550
007 = 7-1/2	**600** = 600
010 = 10	**650** = 650
015 = 15	**700** = 700
020 = 20	**800** = 800
025 = 25	**900** = 900
030 = 30	**H10** = 1000
040 = 40	**H12** = 1200
050 = 50	**H13** = 1350
060 = 60	**H15** = 1500
075 = 75	**H16** = 1600
100 = 100	**H20** = 2000
125 = 125	

AFD Software Series

A = Standard Software

Enclosure ⑦

0 = Open Chassis
1 = NEMA Type 1
2 = NEMA Type 12

Voltage

2 = 208 – 230V
4 = 380 – 500V
5 = 525 – 690V

Keypad

A = AlphaNumeric

Input Options ①②

1 = 3-Phase, EMC H
2 = 3-Phase, EMC N
4 = 3-Phase, EMC L

Braking

N = No Brake Chopper ③⑤
B = Internal Brake Chopper ④⑥

Board Modifications

1 = Standard Boards (A9, A2)

Expansion Slots 3 through 5

- Option boards be selected from left to right, in alpha-numeric order.
- Characters to be left blank if no options are selected

① All 230V Drives and 480V Drives up to 200 hp (I_H) are only available with Input Option **1**.
② 480V Drives 250 hp (I_H) or larger are only available with Input Option **2**.
③ 480V Drives up to 30 hp (I_H) are only available with Brake Chopper Option **B**.
④ 480V Drives 40 hp (I_H) and larger come with Brake Chopper Option **N** as standard.
⑤ 230V Drives up to 15 hp (I_H) are only available with Brake Chopper Option **B**.
⑥ 230V Drives 20 hp (I_H) or larger come with Brake Chopper Option **N** as standard.
⑦ 480V Drives 250 hp, 300 hp and 350 hp (I_H) are only available with Enclosure Style **0** (Chassis).

Chapter 2 — Mounting

The SVX9000/SPX9000 drive may be mounted side-by-side or stacked vertically, as outlined in the following section.

Space Requirements

To ensure proper air circulation and cooling, follow the guidelines below.

Table 2-1: Space Requirements for Mounting a SVX9000/SPX9000 Drive

Frame	Drive Type	Dimensions in Inches (mm) ①				
		A	A_2	B	C	D
4	230V, 1 – 3 hp I_L, 3/4 – 3 hp I_H 480V, 1 – 5 hp I_H, 1-1/2 – 7-1/2 hp I_L	0.8 (20)	—	0.8 (20)	3.9 (100)	2.0 (50)
5	230V, 5 – 10 hp I_L, 5 – 7-1/2 hp I_H 480V, 7-1/2 – 15 hp I_H, 10 – 20 hp I_L	1.2 (30)	—	0.8 (20)	4.7 (120)	2.4 (60)
6	230V, 15 – 20 hp I_L, 10 – 15 hp I_H 480V, 20 – 30 hp I_H, 25 – 40 hp I_L 575V, 2 – 25 hp I_H, 3 – 30 hp I_L	1.2 (30)	—	0.8 (20)	6.3 (160)	3.1 (80)
7	230V, 25 – 40 hp I_L, 20 – 30 hp I_H 480V, 40 – 60 hp I_H, 50 – 75 hp I_L 575V, 30 – 40 hp I_H, 40 – 50 hp I_L	3.1 (80)	—	3.1 (80)	11.8 (300)	3.9 (100)
8	480V, 75 – 125 hp I_H, 100 – 150 hp I_L 575V, 50 – 75 hp I_H, 60 – 100 hp I_L	3.1 (80)	5.9 (150)	3.1 (80)	11.8 (300)	7.9 (200)
9	480V, 200 – 250 hp I_L, 150 – 200 hp I_H 575V, 100 – 150 hp I_H, 150 – 200 hp I_L	2.0 (50)	—	3.1 (80)	15.7 (400)	9.8 (250) 13.8 (350) ②

① Dimensions represent the minimum clearance needed when mounting a SVX9000/SPX9000. See **Figure 2-1** below.
A = clearance around the SVX9000/SPX9000.
A_2 = clearance needed to change the fan without disconnecting the motor cables.
B = distance between adjacent SVX9000/SPX9000 drives or between the SVX9000/SPX9000 and an enclosure wall.
C = clearance above the SVX9000/SPX9000.
D = clearance below the SVX9000/SPX9000.
② Minimum clearance below the SVX9000/SPX9000 needed to change the fan.

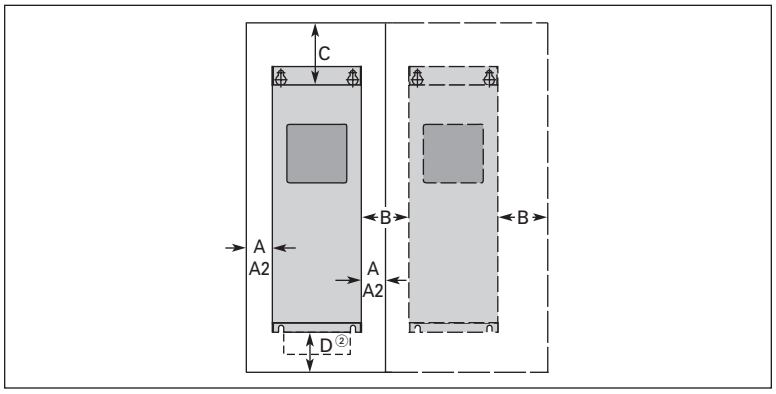

Figure 2-1: Mounting Space Requirements.

If several units are mounted above each other, the clearance between the drives should equal C + D (see **Table 2-1** and **Figure 2-1** above). In addition, the outlet air used for cooling the lower unit must be directed away from the inlet air used by the upper unit.

Environmental Requirements

Ensure that the environment meets the requirements listed in **Table A-1** of **Appendix A** for any storage or operating situation.

Table 2-2 specifies the minimum airflow required in the area where the drive will be mounted.

Table 2-2: Cooling Airflow Requirements

Drive Type	Cooling Air Required
230V, 3/4 – 3 hp I_H 480V, 1 – 5 hp I_H	41 cfm (70 m^3/h)
230V, 5 – 7-1/2 hp I_H 480V, 7-1/2 – 15 hp I_H	112 cfm (190 m^3/h)
230V, 10 – 15 hp I_H 480V, 20 – 30 hp I_H 575V, 2 – 25 hp I_H	250 cfm (425 m^3/h)
230V, 20 – 30 hp I_H 480V, 40 – 60 hp I_H 575V, 30 – 40 hp I_H	250 cfm (425 m^3/h)
480V, 75 – 125 hp I_H 575V, 60 – 75 hp I_H	383 cfm (650 m^3/h)
480V, 150 – 200 hp I_H 575V, 100 – 150 hp I_H	765 cfm (1300 m^3/h)

Standard Mounting Instructions

1. Measure the mounting space to ensure that it allows for the minimum space surrounding the drive. Drive dimensions are in **Appendix A**.
2. Make sure the mounting surface is flat and strong enough to support the drive, is not flammable, and is not subject to excessive motion or vibration.
3. Ensure that the minimum airflow requirements for your drive are met at the mounting location.
4. Mark the location of the mounting holes on the mounting surface, using the template provided on the cover of the cardboard shipping package.
5. Using fasteners appropriate to your drive and mounting surface, securely attach the drive to the mounting surface using all 4 screws or bolts.

Chapter 3 — Power Wiring

Guidelines

To ensure proper wiring, use the following guidelines:

- Use heat-resistant copper cables only, +75°C or higher.
- The input line cable and line fuses must be sized in accordance with the rated input current of the unit. See **Tables 3-2** through **3-8**.
- Provide a ground wire with both input power and output motor leads.

The control should be installed in accordance with all applicable codes. In accordance with NEC 430 Part IV, a protective device is required in the installation of the control. This protective device can be either a fuse or circuit breaker. An RK fuse is an acceptable component. For maximum protection Eaton recommends a Class T fuse.

Input line cable and line fuses must be sized in accordance with **Tables 3-2** through **3-6**.

- If the motor temperature sensing is used for overload protection, the output cable size may be selected based on the motor specifications.
- If three or more shielded cables are used in parallel for the output on the larger units, every cable must have its own overload protection.
- Avoid placing the motor cables in long parallel lines with other cables.
- If the motor cables run in parallel with other cables, note the minimum distances between the motor cables and other cables given in **Table 3-1** below:

Table 3-1: Cable Spacings

Minimum Distance Between Cables in Feet (m)	Cable in Feet (m)
1 (0.3)	≤ 164 (50)
3.3 (1.0)	≤ 656 (200)

- The spacings of **Table 3-1** also apply between the motor cables and signal cables of other systems.
- The maximum length of the motor cables is as follows:
  - 1 – 2 hp, 230V units, 328 ft. (100m)
  - All other hp units, 984 ft. (300m)
- The motor cables should cross other cables at an angle of 90 degrees.
- If conduit is being used for wiring, use separate conduits for the input power wiring, the output power wiring, the signal wiring and the control wiring.

UL Compatible Cable Selection and Installation

Use only copper wire with temperature rating of at least 75°C.

Table 3-2: 40°C Cable and Fuse Sizes — 230V Ratings

I_L hp	Frame Size	NEC I [A]	I [A]	Fuse ① Quantity	Fuse [A]	Wire Size		Terminal Size	
						Power	Ground	Power	Ground
1	FR4	4.2	4.8	3	10	14	14	16 – 12	16 – 14
1-1/2		6	6.6	3	10	14	14	16 – 12	16 – 14
2		6.8	7.8	3	10	14	14	16 – 12	16 – 14
3		9.6	11	3	15	14	14	16 – 12	16 – 14
5	FR5	15.2	17.5	3	20	12	12	16 – 8	16 – 8
7-1/2		22	25	3	30	10	10	16 – 8	16 – 8
10		28	31	3	40	8	8	16 – 8	16 – 8
15	FR6	42	48	3	60	4	8	14 – 0	10 – 2
20		54	61	3	80	2	6	14 – 0	10 – 2
25	FR7	68	72	3	100	2	6	14 – 0	10 – 00
30		80	87	3	110	1	6	14 – 0	10 – 00
40		104	114	3	125	1/0	4	14 – 0	10 – 00
50	FR8	130	140	3	175	3/0	2	4 – 3/0	4 – 000
60		154	170	3	200	4/0	0	000 – 350 MCM	4 – 000
75		192	205	3	250	300	2/0	000 – 350 MCM	4 – 000
100	FR9	248	261	3	300	2x4/0	3/0	2x000 – 350 MCM	4 – 000

① UL recognized type JJS preferred but RK acceptable.

Table 3-3: 40°C Cable and Fuse Sizes — 480V Ratings

I_L hp	Frame Size	NEC I [A]	I [A]	Fuse ① Quantity	Fuse [A]	Wire Size		Terminal Size	
						Power	Ground	Power	Ground
1-1/2	FR4	3	3.3	3	10	14	14	16 – 12	16 – 14
2		3.4	4.3	3	10	14	14	16 – 12	16 – 14
3		4.8	5.6	3	10	14	14	16 – 12	16 – 14
5		7.6	7.6	3	10	14	14	16 – 12	16 – 14
7-1/2		11	12	3	15	12	14	16 – 12	16 – 14
10	FR5	14	16	3	20	10	12	16 – 8	16 – 8
15		21	23	3	30	10	10	16 – 8	16 – 8
20		27	31	3	35	8	8	16 – 8	16 – 8
25	FR6	34	38	3	50	6	8	14 – 0	10 – 2
30		40	46	3	60	4	8	14 – 0	10 – 2
40		52	61	3	80	2	6	14 – 0	10 – 2
50	FR7	65	72	3	100	2	6	14 – 0	10 – 00
60		77	87	3	110	1	6	14 – 0	10 – 00
75		96	105	3	125	1/0	4	14 – 0	10 – 00
100	FR8	124	140	3	175	3/0	2	4 – 3/0	4 – 000
125		156	170	3	200	4/0	0	000 – 350 MCM	4 – 000
150		180	205	3	250	300	2/0	000 – 350 MCM	4 – 000
200	FR9	240	261	3	350	2x4/0	3/0	2x000 – 350 MCM	4 – 000
250		302	300	3	400	2x250	300	2x000 – 350 MCM	4 – 000
300	FR10	361	385	3	450	2x250	300	600 MCM	300 MCM
350		414	460	3	500	2x300	300	600 MCM	300 MCM
400		477	520	3	600	2x400	350	600 MCM	300 MCM
500	FR11	590	590	6	350	2x500	500	Bus Bar	Bus Bar
550		NS	650	6	400	4x4/0	500	Bus Bar	Bus Bar
600		NS	730	6	450	4x250	600	Bus Bar	Bus Bar
650	FR12	NS	820	6	500	4x300	600	Bus Bar	Bus Bar
700		NS	920	6	500	4x300	600	Bus Bar	Bus Bar
800		NS	1030	6	600	4x350		Bus Bar	Bus Bar

① UL recognized type JJS preferred but RK acceptable.

Table 3-4: 40°C Cable and Fuse Sizes — 575V Ratings

I_L hp	Frame Size	NEC I [A]	I [A]	Fuse ① Quantity	Fuse [A]	Wire Size		Terminal Size	
						Power	Ground	Power	Ground
3	FR6	3.9	4.5	3	10	14	14	14 – 0	14 – 2
5		6.1	7.5	3	10	14	14	14 – 0	14 – 2
7-1/2		9	10	3	15	12	14	14 – 0	14 – 2
10		11	13.5	3	20	12	12	14 – 0	14 – 2
15		17	18	3	30	10	10	14 – 0	14 – 2
20		22	22	3	35	8	8	14 – 0	14 – 2
25		27	27	3	40	8	8	14 – 0	14 – 2
30		32	34	3	45	6	8	14 – 0	14 – 2
40	FR7	41	41	3	50	6	8	14 – 0	10 – 0
50		52	52	3	70	4	6	14 – 0	10 – 0
60	FR8	62	62	3	80	2	6	4 – 000	4 – 000
75		77	80	3	125	1/0	6	4 – 000	4 – 000
100		99	100	3	150	2/0	6	4 – 000	4 – 000
125		125	125	3	175	3/0	6	4 – 000	4 – 000
150	FR9	144	144	3	250	300	1/0	000 – 350 MCM	4 – 000
200		192	208	3	275	350	2/0	000 – 350 MCM	4 – 000
250	FR10	242	261	3	350	2x4/0	3/0	600 MCM	300 MCM
300		289	325	3	400	2x250	300	600 MCM	300 MCM
400		382	385	3	450	2x300	300	600 MCM	300 MCM
450	FR11	412	460	6	250	2x300	300	Bus Bar	Bus Bar
500		472	502	6	300	2x350	350	Bus Bar	Bus Bar
550		NS	590	6	350	2x500	500	Bus Bar	Bus Bar
600	FR12	NS	650	6	400	4x4/0	500	Bus Bar	Bus Bar
700		NS	750	6	450	4x250	600	Bus Bar	Bus Bar
800		NS	820	6	500	4x300	600	Bus Bar	Bus Bar

① UL recognized type JJS preferred but RK acceptable

Table 3-5: Cable and Busbar Sizes, SPX FR10 – FR12 — 480V Ratings

hp	Frame Size	Current	Internal Power Cables ② Cu (per phase)	External Power Busbars	
				Cu (in Inches)	Qty.
250	FR10	300	2 x 2/0	1.18 x 0.25	3
300		385	2 x 3/0	1.57 x 0.25	3
350		460	2 x 3/0	1.57 x 0.25	3
400	FR11	520	2 x 2 x 2/0	1.18 x 0.25	6
500		590	2 x 2 x 2/0	1.18 x 0.25	6
—		650	2 x 2 x 2/0	1.18 x 0.25	6
600	FR12	750	2 x 2 x 3/0	1.57 x 0.25	6
—		820	2 x 2 x 3/0	1.57 x 0.25	6
700		920	2 x 2 x 3/0	1.57 x 0.25	6

② 90°C rating recommended.

Table 3-6: Cable and Busbar Sizes, SPX FR13 – FR14 — 480V Ratings

hp	Frame Size	Current	Internal Power Connections			Supply Busbars	
			Busbar Size NFE – INU (in Inches)	Busbar Size/ Phase ① (Choke — NFE) (in Inches)	Cable Size/ Phase (Choke — NFE)	Cu (in Inches)	Qty.
800	FR13	1030	2.36 x 0.39	1.57 x 0.25	2 x 300 MCM	1.57 x 0.25	6
900		1150	3.15 x 0.39	1.57 x 0.25	2 x 250 MCM	1.57 x 0.25	12
1000		1300	3.15 x 0.39	1.57 x 0.25	2 x 250 MCM	1.57 x 0.25	12
1200	FR14	1600	2.36 x 0.39	1.57 x 0.25	2 x 250 MCM	1.57 x 0.25	12
1600		1940	2.36 x 0.39	1.57 x 0.25	2 x 300 MCM	1.57 x 0.25	12

① Rigid copper connection.

Table 3-7: Cable and Busbar Sizes, SPX FR10 – FR12 — 575V Ratings

hp	Frame Size ②	Current	Internal Power Cables ② Cu (per phase)	External Power Busbars	
				Cu (in Inches)	Qty.
200	FR10	208	2x2/0	1.18 x .25	3
250		261	2x2/0	1.18 x .25	3
300		325	2x2/0	1.18 x .25	3
400	FR11	385	2x3/0	1.57 x .25	3
450		460	2x3/0	1.57 x .25	3
500		502	2x2x2/0	1.18 x .25	6
—	FR12	590	2x2x2/0	1.18 x .25	6
600		650	2x2x2/0	1.18 x .25	6
700		750	2\x2x2/0	1.18 x .25	6

② 90°C rating recommended.

Table 3-8: Cable and Busbar Sizes, SPX FR13 – FR14 — 575V Ratings

hp	Frame Size	Current	Internal Power Connections			Supply Busbars	
			Busbar Size NFE – INU (in Inches)	Busbar Size/ Phase ③ (Choke — NFE) (in Inches)	Cable Size/ Phase (Choke — NFE)	Cu (in Inches)	Qty.
800	FR13	820	2.36 x 0.39	1.57 x .25	2 x 300 MCM	1.18 x .25	6
900		920	2.36 x 0.39	1.57 x .25	2 x 250 MCM	1.18 x .25	6
1000		1030	2.36 x 0.39	1.57 x .25	2 x 300 MCM	1.18 x .25	6
1350	FR14	1300	3.15 x 0.39	1.57 x .25	2 x 250 MCM	1.18 x .25	12
1500		1500	2.36 x 0.39	1.57 x .25	2 x 250 MCM	1.18 x .25	12
2000		1900	2.36 x 0.39	1.57 x .25	2 x 300 MCM	1.18 x .25	12

③ Rigid copper connection.

Table 3-9: Maximum Symmetrical Supply Current

Product	Voltage	Maximum RMS Symmetrical Amperes on Supply Circuit
3/4 – 30 hp	230	100,000A
1-1/2 – 200 hp	480	100,000A

UL Compatible Cable Selection and Installation with Breaker

Use only copper wire with temperature rating of at least 75°C.

Table 3-10: Cable and Breaker ② Sizes – 230V Ratings

hp	Frame Size	FLA	Breaker Current	Wire Size ①		Terminal Size	
				Power	Ground	Power	Ground
1	FR4	4.8	15	14	14	12 – 16	14 – 16
1-1/2		6.6	15	14	14	12 – 16	14 – 16
2		7.8	15	14	14	12 – 16	14 – 16
3		11	15	12	12	12 – 16	14 – 16
5	FR5	17.5	20	10	10	8 – 16	8 – 16
7-1/2		25	30	8	8	8 – 16	8 – 16
10	FR6	31	40	8	8	1/0 – 14	2 – 14
15		48	60	4	6	1/0 – 14	2 – 14
20	FR7	61	80	2	6	1/0 – 14	2/0 – 10
25		72	100	2	6	1/0 – 14	2/0 – 10
30		87	100	1/0	4	1/0 – 14	2/0 – 10

① Based on a maximum environment of 104°F (40°C).
② A UL listed breaker must be used.

Table 3-11: Cable and Breaker ④ Sizes – 480V Ratings

hp	Frame Size	FLA	Breaker Current	Wire Size ③		Terminal Size	
				Power	Ground	Power	Ground
1-1/2	FR4	3.3	15	14	14	12 – 16	14 – 16
2		4.3	15	14	14	12 – 16	14 – 16
3		5.6	15	14	14	12 – 16	14 – 16
5		7.6	15	14	14	12 – 16	14 – 16
7-1/2	FR5	12	20	12	12	8 – 16	8 – 16
10		16	30	10	10	8 – 16	8 – 16
15		23	30	8	8	8 – 16	8 – 16
20	FR6	31	40	8	8	1/0 – 14	2 – 14
25		38	50	6	8	1/0 – 14	2 – 14
30		46	60	4	6	1/0 – 14	2 – 14
40	FR7	61	80	2	6	1/0 – 14	2/0 – 10
50		72	100	2	6	1/0 – 14	2/0 – 10
60		87	100	1/0	4	1/0 – 14	2/0 – 10
75	FR8	105	125	2/0	2	3/0 – 4	3/0 – 4
100		140	150	4/0	1/0	350 MCM – 3/0	3/0 – 4
125		170	200	300	2/0	350 MCM – 3/0	3/0 – 4
150	FR9	205	250	350	3/0	350 MCM – 2x3/0	3/0 – 4
200		261	300	2x250	3/0	350 MCM – 2x3/0	3/0 – 4
250	FR10	300	400	2x250	300 MCM	600 MCM	600 MCM
300		385	500	2x300	300 MCM	600 MCM	600 MCM
350		460	600	2x400	300 MCM	600 MCM	600 MCM
400	FR11	520	700	2x500	500	Bus Bar	Bus Bar
500		590	800	4x4/0	500	Bus Bar	Bus Bar
550		650	900	4x250	600	Bus Bar	Bus Bar
600	FR12	750	1000	4x300	600	Bus Bar	Bus Bar
650		820	1000	4x300	600	Bus Bar	Bus Bar
700		920	1200	4x400		Bus Bar	Bus Bar

③ Based on a maximum environment of 104°F (40°C).
④ A UL listed breaker must be used.

Table 3-12: Cable and Breaker ② Sizes – 575V Ratings

hp	Frame Size	FLA	Breaker Current	Wire Size ①		Terminal Size	
				Power	Ground	Power	Ground
2	FR6	3.3	15	14	14	1/0 – 14	2 – 14
3		4.5	15	14	14	1/0 – 14	2 – 14
5		7.5	15	14	14	1/0 – 14	2 – 14
7-1/2		10	20	12	14	1/0 – 14	2 – 14
10		13.5	30	10	12	1/0 – 14	2 – 14
15		18	30	10	10	1/0 – 14	2 – 14
20		22	40	8	8	1/0 – 14	2 – 14
25		27	40	8	8	1/0 – 14	2 – 14
30	FR7	34	50	6	8	1/0 – 14	1/0 – 10
40		41	60	4	6	1/0 – 14	1/0 – 10
50	FR8	52	100	2	6	3/0 – 4	3/0 – 4
60		62	100	1	6	3/0 – 4	3/0 – 4
75		80	125	1/0	6	3/0 – 4	3/0 – 4
100		100	150	3/0	6	3/0 – 4	3/0 – 4
125	FR9	125	200	4/0	2	350 MCM – 2x3/0	3/0 – 4
150		144	250	350	1/0	350 MCM – 2x3/0	3/0 – 4
200	FR10	208	300	2x250	300 MCN	600 MCM	600 MCM
250		261	400	2x300	300 MCM	600 MCM	600 MCM
300		325	500	2x350	300 MCM	600 MCM	600 MCM
400	FR11	385	500	2x300	300	Bus Bar	Bus Bar
450		460	600	2x350	350	Bus Bar	Bus Bar
500		502	700	2x500	500	Bus Bar	Bus Bar
550	FR12	590	800	4x4/0	500	Bus Bar	Bus Bar
600		650	900	4x250	600	Bus Bar	Bus Bar
700		750	1000	4x300	600	Bus Bar	Bus Bar

① Based on a maximum environment of 104°F (40°C).
② A UL listed breaker must be used.

Note: The current interrupting of the breaker, up to 100 kAIC, will determine the overall current rating of the combination.

Table 3-13: Power Connection Tightening Torque

Rating	Frame Size	Tightening Torque (in-lbs)	Tightening Torque (Nm)
230V, 3/4 – 3 hp 480V, 1 – 5 hp	FR4	5 5	0.6 0.6
230V, 5 – 7-1/2 hp 480V, 7-1/2 – 15 hp	FR5	13 13	1.5 1.5
230V, 10 – 15 hp 480V, 20 – 30 hp 575V, 2 – 25 hp	FR6	35 35 35	4 4 4
230V, 20 – 30 hp 480V, 40 – 60 hp 575V, 30 – 40 hp	FR7	85 85 85	10 10 10
480V, 75 – 125 hp 575V, 50 – 75 hp	FR8	340/187 ① 340/187 ①	40/22 ① 40/22 ①
480V, 150 – 200 hp 575V, 100 – 175 hp	FR9	340/187 ① 340/187 ①	40/22 ① 40/22 ①

① The isolation standoff of the bus bar will not withstand the listed tightening torque. Use a wrench to apply a counter torque when tightening.

Installation Instructions

1. Strip the motor and input power cables as shown in **Figure 3-1** and **Table 3-14**.

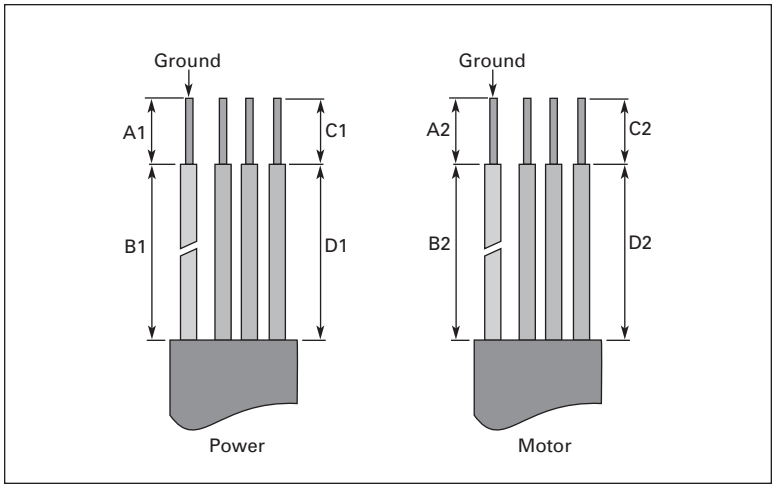

Figure 3-1: Input Power and Motor Cable Stripping and Wire Lengths

Cable Stripping Lengths for Power and Motor Cables

Table 3-14: Power and Motor Cable Stripping Lengths

Product		Frame Size	Power Wiring in Inches (mm)				Motor Wiring in Inches (mm)			
hp	Voltage		A1	B1	C1	D1	A2	B2	C2	D2
3/4 – 3 1 – 5	230V 480V	FR4	0.59 (15)	1.38 (35)	0.39 (10)	0.79 (20)	0.28 (7)	1.97 (50)	0.28 (7)	1.38 (35)
5 – 7-1/2 7-1/2 – 15	230V 480V	FR5	0.79 (20)	1.57 (40)	0.39 (10)	1.18 (30)	0.79 (20)	2.36 (60)	0.39 (10)	1.57 (40)
10 – 15 20 – 30 2 – 25	230V 480V 575V	FR6	0.79 (20)	3.54 (90)	0.59 (15)	2.36 (60)	0.79 (20)	3.54 (90)	0.59 (15)	2.36 (60)
20 – 30 40 – 60 30 – 40	230V 480V 575V	FR7	0.98 (25)	4.72 (120)	0.98 (25)	4.72 (120)	0.98 (25)	4.72 (120)	0.98 (25)	4.72 (120)
75 – 125 50 – 75	480V 575V	FR8	1.10 (28)	9.45 (240)	1.10 (28)	9.45 (240)	1.10 (28)	9.45 (240)	1.10 (28)	9.45 (240)
150 – 200 100 – 300	480V 575V	FR9	1.10 (28)	11.61 (295)	1.10 (28)	11.61 (295)	1.10 (28)	11.61 (295)	1.10 (28)	11.61 (295)

2. Locate the plastic bag containing the wiring plate.

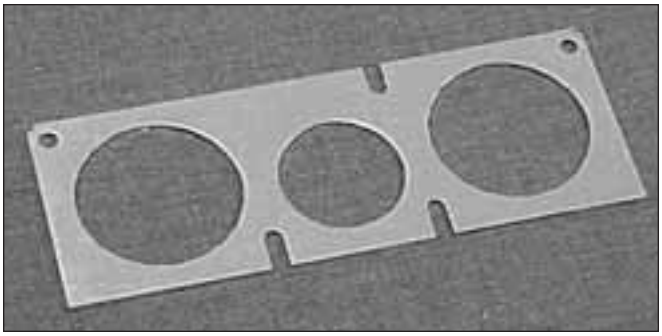

Figure 3-2: Wiring Plate

3. If conduit is being used, attach the wiring plate to drive then conduit.
4. Pass the motor and input power wires/cables through the holes of the wiring plate.
5. Connect the input power and motor and control wires to their respective terminals according to the wiring diagrams in the section marked “Standard Wiring Diagrams and Terminal Locations” on **Page 3-11**.
6. If an optional external brake resistor is used, connect its cable to the appropriate terminals. See “Standard Wiring Diagrams and Terminal Locations.”
7. If shielded cable is used, connect the shields of the input line power cable and the motor cable to the ground terminals of the SVX9000/SPX9000 drive, the motor and the line power supply.

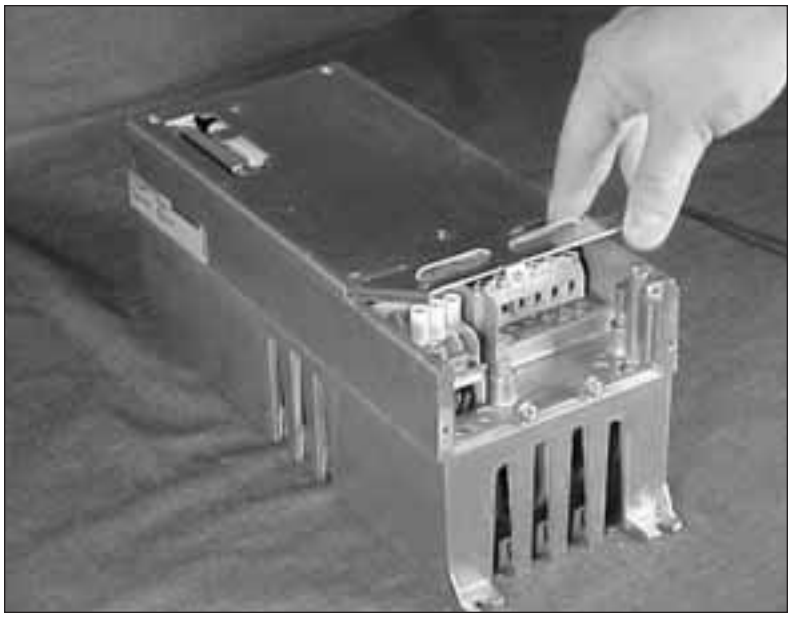

Figure 3-3: Ground Terminal Locations

8. If shielded cable is not used, check the connection of the ground cable to the motor, the SVX9000/SPX9000 drive and the input line power terminals marked with ⏚ .
9. Attach the wiring plate with the screws provided. Ensure that no wires are trapped between the frame and the wiring plate.
10. Insert the rubber grommets supplied into the wiring plate holes that have not been used, as illustrated in **Figure 3-4**.

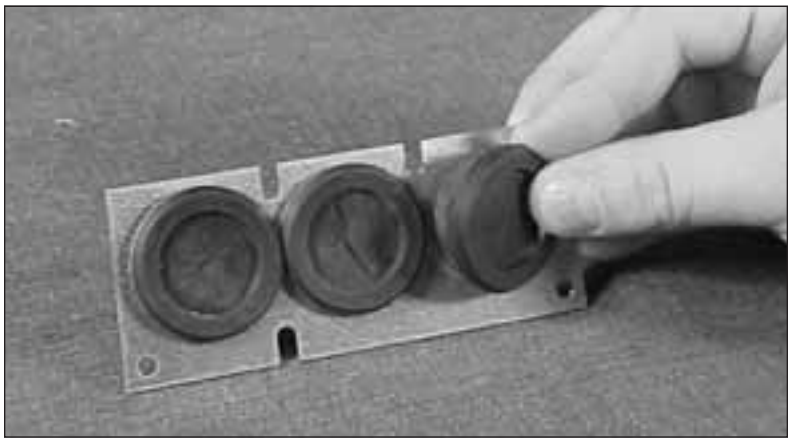

Figure 3-4: Cable Protection Plate

Standard Wiring Diagrams and Terminal Locations

The following wiring diagrams show the line and motor connections of the frequency converter.

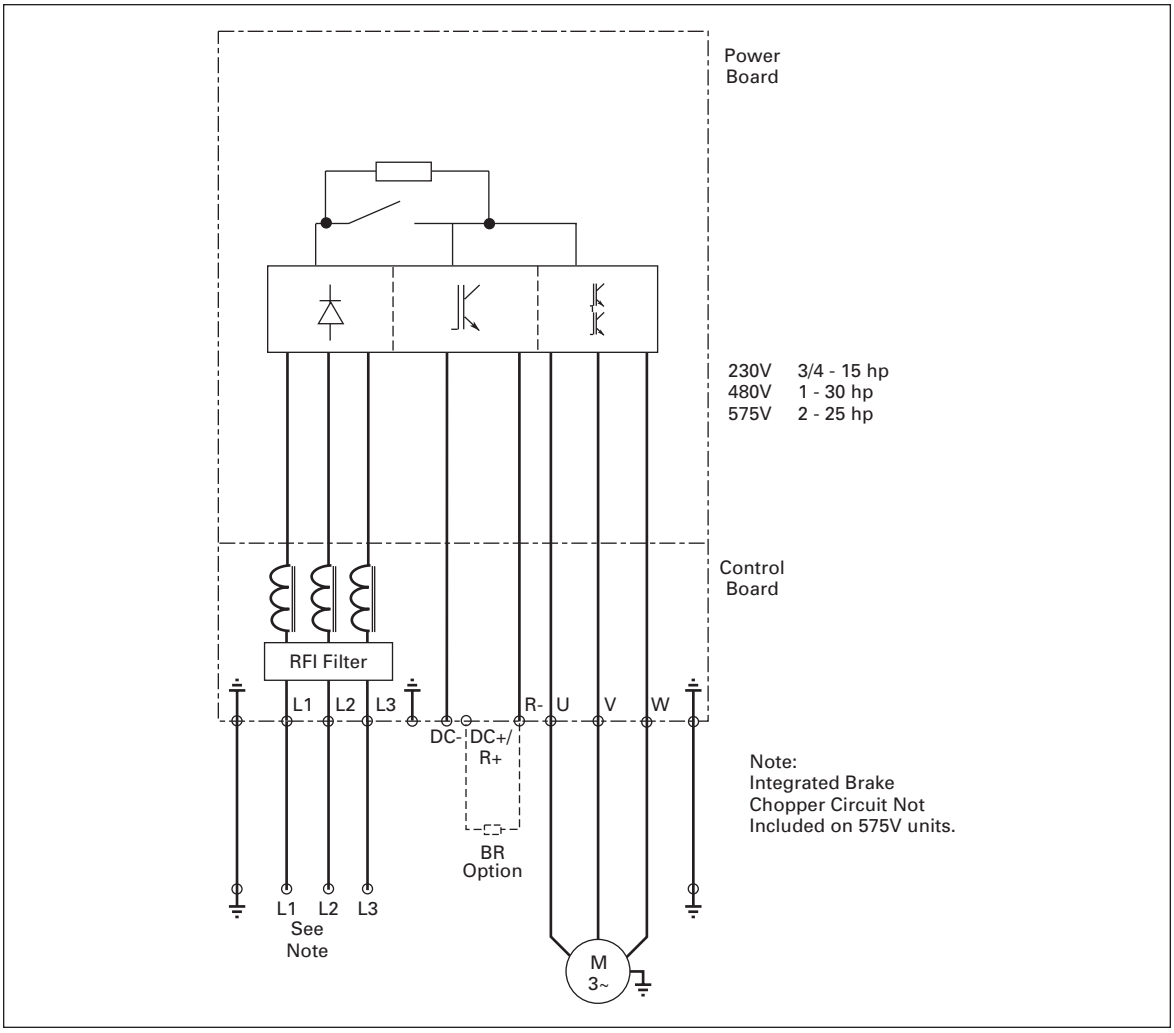

Figure 3-5: Principle Wiring Diagram of SVX9000/SPX9000 Power Unit, FR4 to FR5 and FR6

Note: When using a 1-phase supply, for units rated for such, connect the input power to terminals L1 and L2. Consult Eaton for more information.

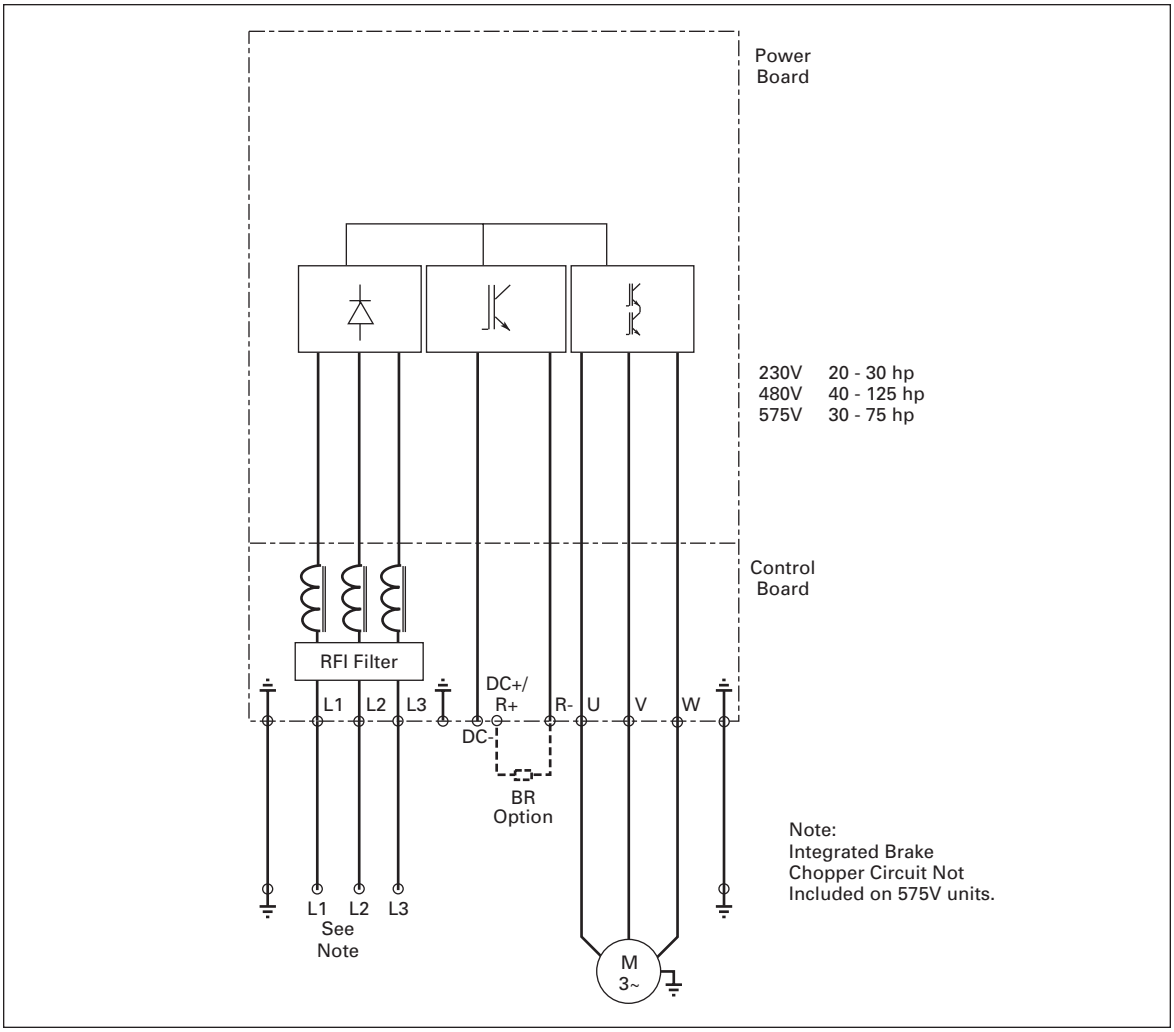

Figure 3-6: Principle Wiring Diagram of SVX9000/SPX9000 Power Unit, FR6, FR7 and FR8

Note: When using a 1-phase supply, for units rated for such, connect the input power to terminals L1 and L2. Consult Eaton for more information.

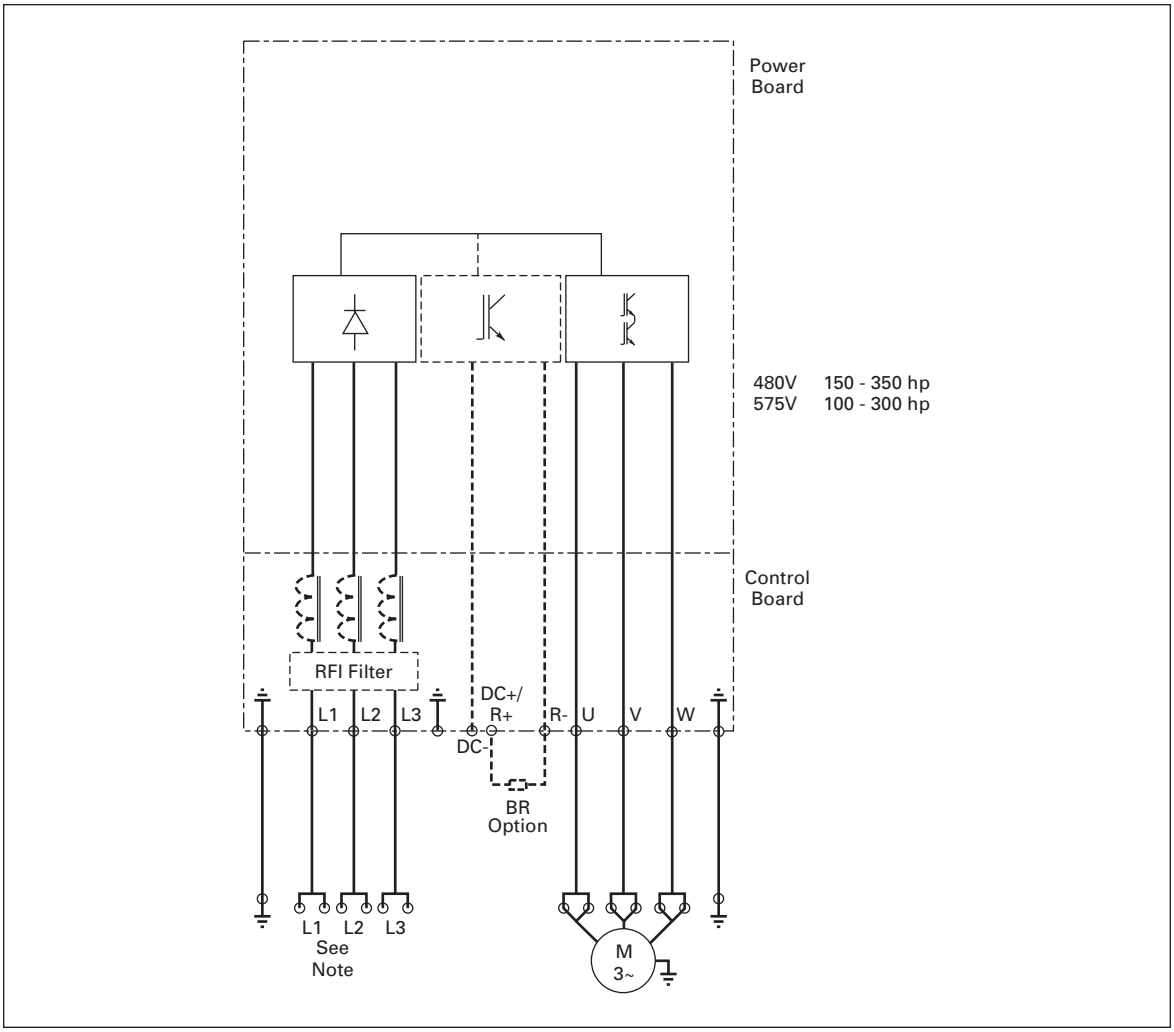

Figure 3-7: Principle Wiring Diagram of SVX9000/SPX9000 Power Unit, FR9 to FR10

The dotted lines refer to components present in FR9 but not in FR10.

Note: When using a 1-phase supply, for units rated for such, connect the input power to terminals L1 and L2. Consult Eaton for more information.

Power and Motor Wiring Terminal Photos

230V, 3/4 – 3 hp
480V, 1 – 5 hp

Frame Size: FR4

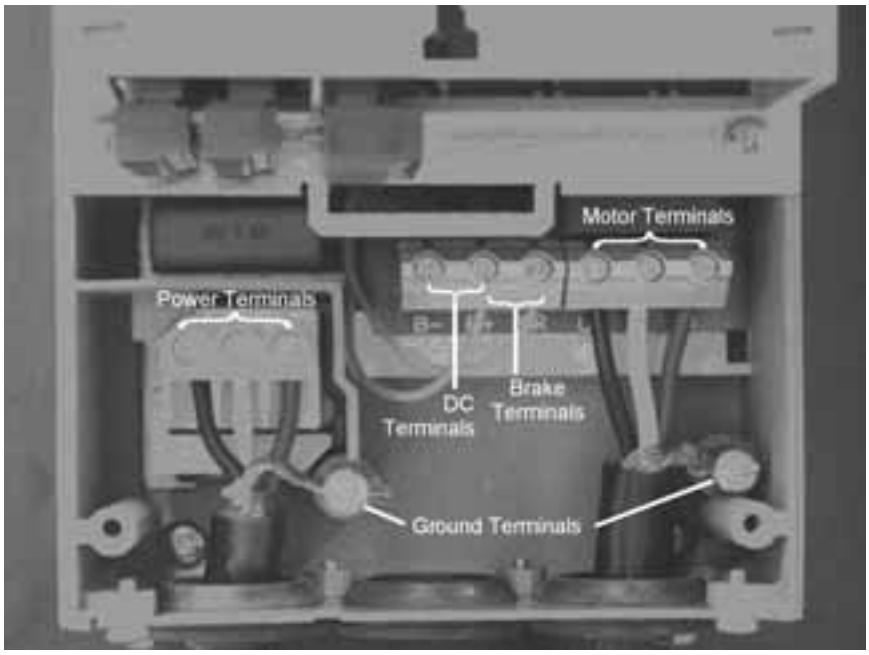

Figure 3-8: FR4 Power and Motor Wiring Terminals

230V, 5 – 7-1/2 hp
480V, 7-1/2 – 15 hp

Frame Size: FR5

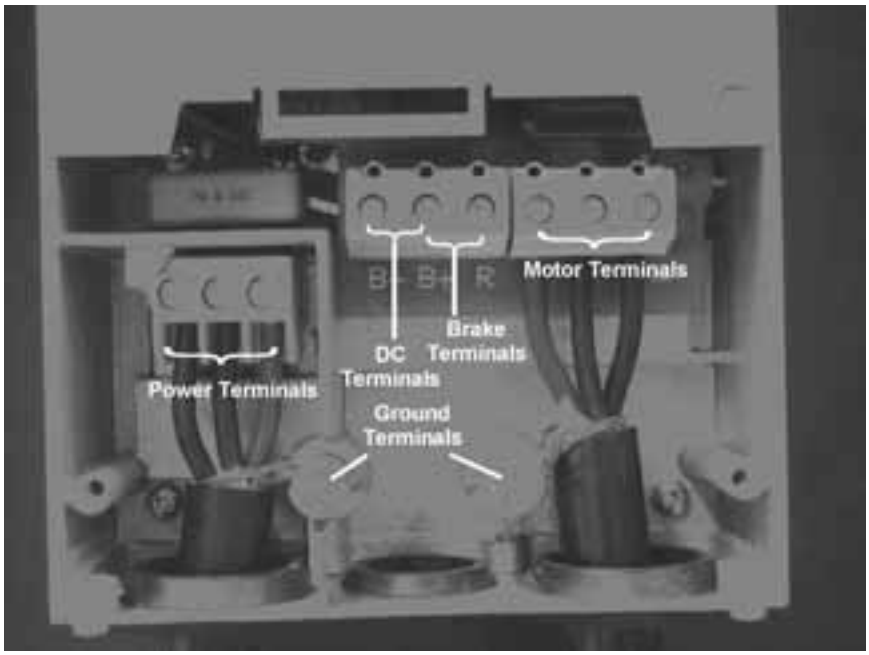

Figure 3-9: FR5 Power and Motor Wiring Terminals

230V, 10 – 15 hp
480V, 20 – 30 hp
575V, 2 – 25 hp

Frame Size: FR6

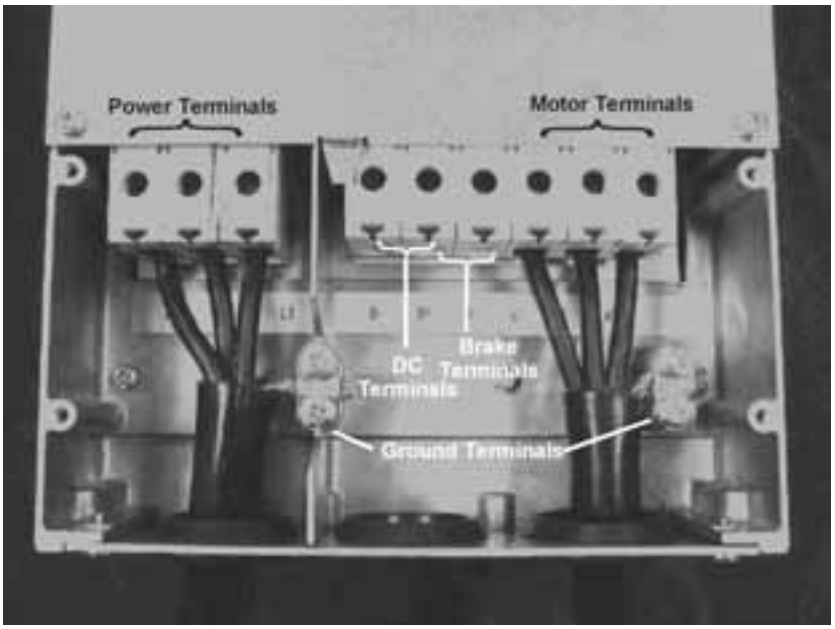

Figure 3-10: FR6 Power and Motor Wiring Terminals

230V, 20 – 30 hp
480V, 40 – 60 hp
575V, 30 – 40 hp

Frame Size: FR7

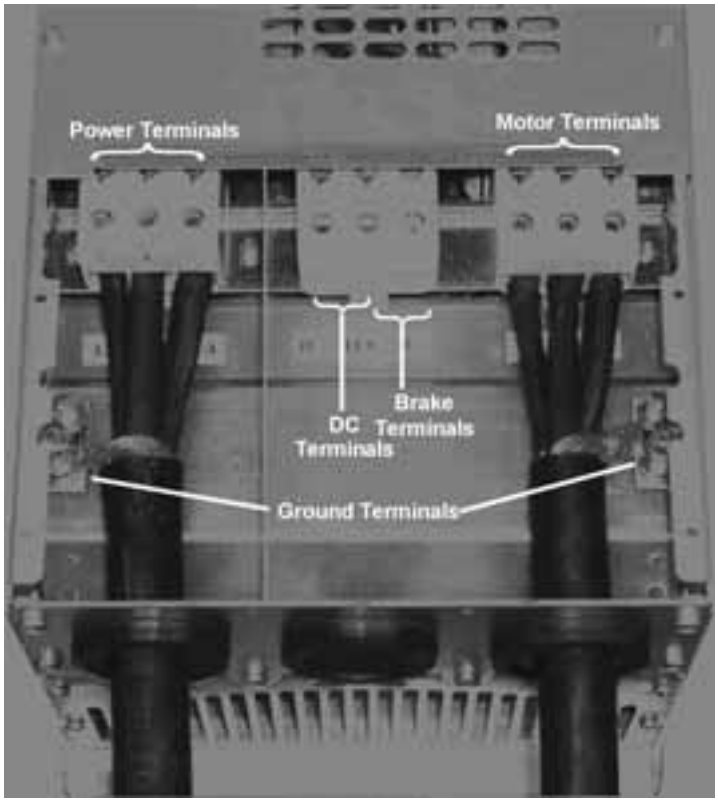

Figure 3-11: FR7 Power and Motor Wiring Terminals

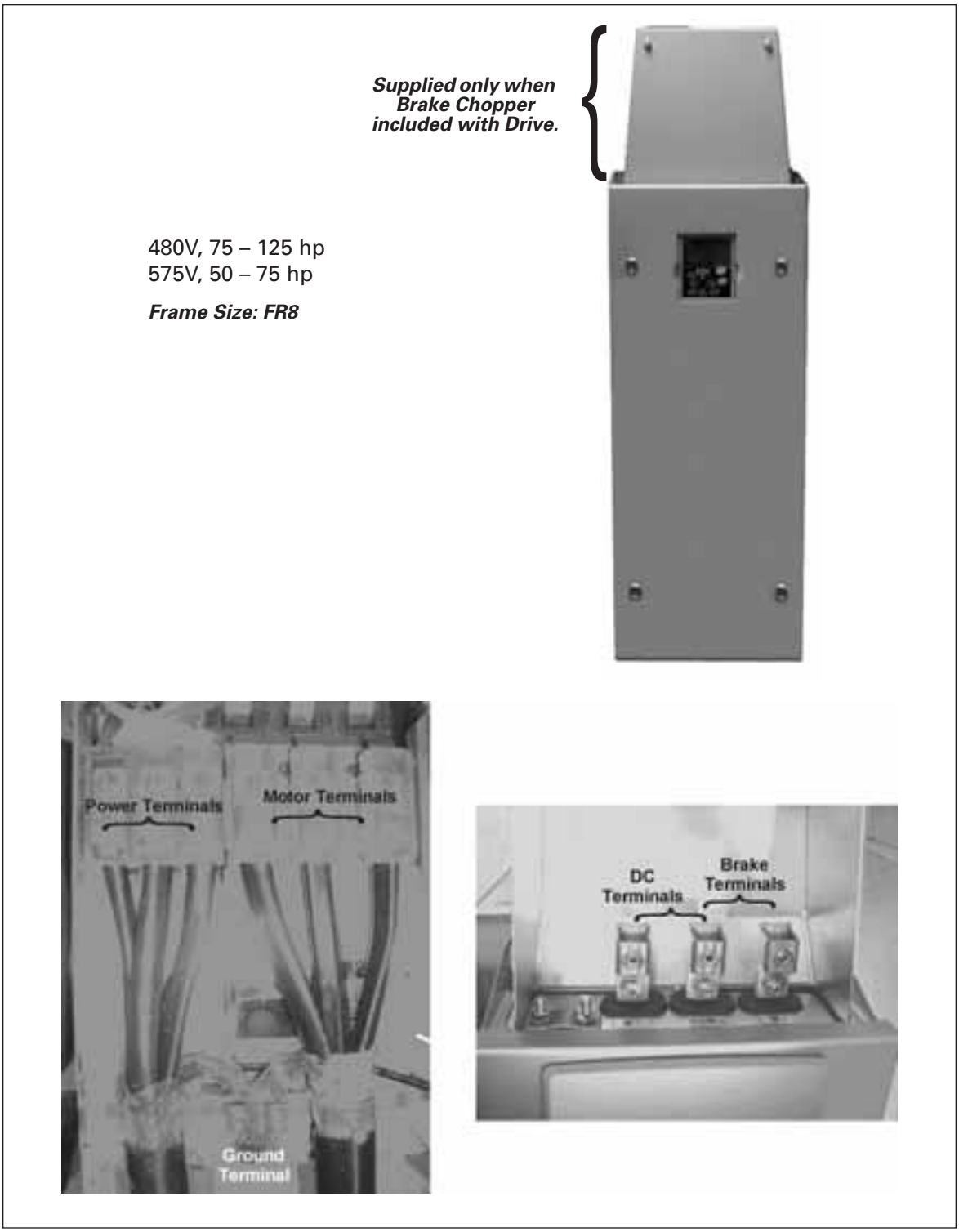

Figure 3-12: FR8 Power and Motor Wiring Terminals

480V, 150 – 200 hp
575V, 100 – 175 hp

Frame Size: FR9

Figure 3-13: FR9 Power and Motor Wiring Terminals

Checking the Cable and Motor Insulation

1. Check the motor cable insulation as follows:

- Disconnect the motor cable from terminals U, V and W of the SVX9000/SPX9000 and from the motor.
- Measure the insulation resistance of the motor cable between each phase conductor as well as between each phase conductor and the protective ground conductor.
- The insulation resistance must be >1 MΩ.

2. Check the input power cable insulation as follows:

- Disconnect the input power cable from terminals L1, L2 and L3 of the SVX9000/SPX9000 and from the utility line feeder.
- Measure the insulation resistance of the input power cable between each phase conductor as well as between each phase conductor and the protective ground conductor.
- The insulation resistance must be >1 MΩ.

3. Check the motor insulation as follows:

- Disconnect the motor cable from the motor and open any bridging connections in the motor connection box.
- Measure the insulation resistance of each motor winding. The measurement voltage must equal at least the motor nominal voltage but not exceed 1000V.
- The insulation resistance must be >1 MΩ.

Chapter 4 — Control Wiring

General Information

The control unit of the SVX9000/SPX9000 consists of the control board and various option boards that plug into the five slot connectors (A to E) of the control board.

Galvanic isolation of the control terminals is provided as follows:

- The control connections are isolated from power, and the GND terminals are permanently connected to ground.
- The digital inputs are galvanically isolated from the I/O ground.
- The relay outputs are double-isolated from each other at 300V AC.

Option Board General Information

The SVX9000/SPX9000 series drives can accommodate a wide selection of *expander* and *adapter option boards* to customize the drive for your application needs.

The drive's control unit is designed to accept a total of five option boards. Option boards are available for normal analog and digital inputs and outputs, communication and additional application-specific hardware.

The SVX9000/SPX9000 factory installed standard option board configuration includes an A9 I/O board and an A2 relay output board, which are installed in slots A and B. For information on additional option boards, see the *9000X Series Drives Option Board User Manual*.

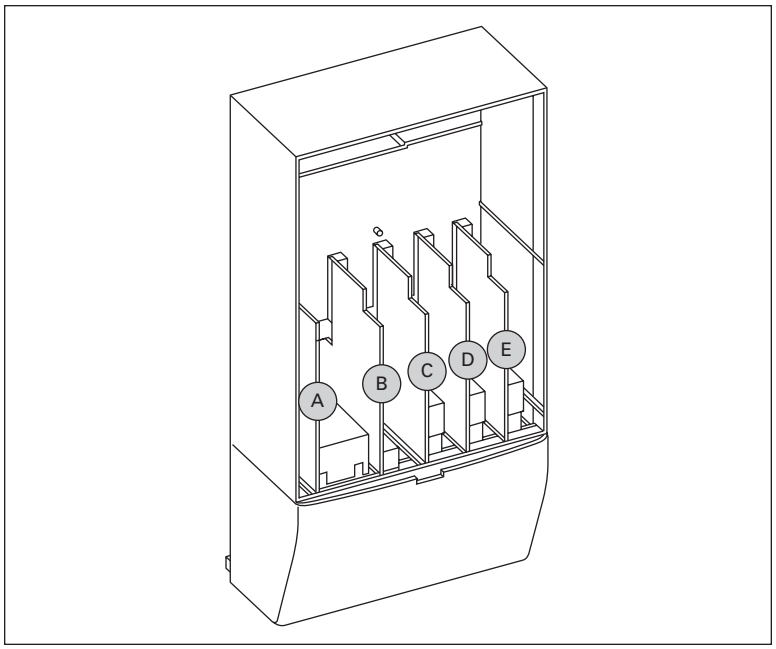

Figure 4-1: Option Board Slots

Control Wiring Guidelines

Wire the control terminals using the following guidelines:

- The control wires shall be at least AWG 20 (0.5 mm^2) shielded cables.
- The maximum wire size is AWG 14 (2.5 mm^2) for the relay terminals and AWG 16 (1.5 mm^2) for all other terminals.
- The tightening torques for the option board terminals are listed in **Table 4-1**.

Table 4-1: Tightening Torques of Terminals

Terminal Screw	Tightening Torque	
	in-lbs	**Nm**
Relay and thermistor terminals (M3 screw)	4.5	0.5
Other terminals (M2.6 screw)	2.2	0.25

Control Wiring Instructions

Table 4-2: Control Wiring Instructions

1. Unlock the bottom cover by turning the locking screw 90 degrees counterclockwise.	
2. Remove the bottom cover by rotating the cover towards you on the base hinges, then lifting the cover away from the base.	

Table 4-2: Control Wiring Instructions (Continued)

3. Wire the control terminals following the details for the specific option boards shown on the following pages. **Note:** Note for ease of access, the option board terminal blocks can be unplugged for wiring.	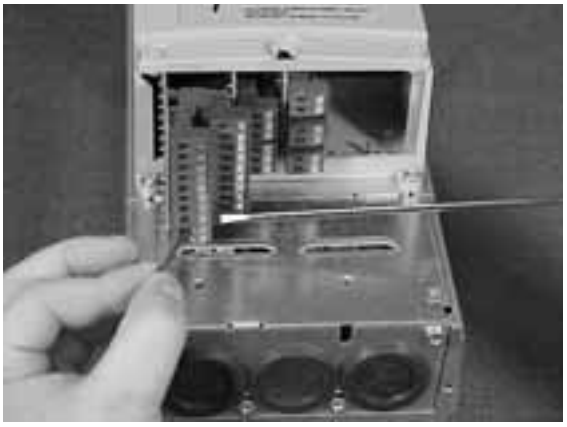

Control Wiring Details

Wiring Option Board A9

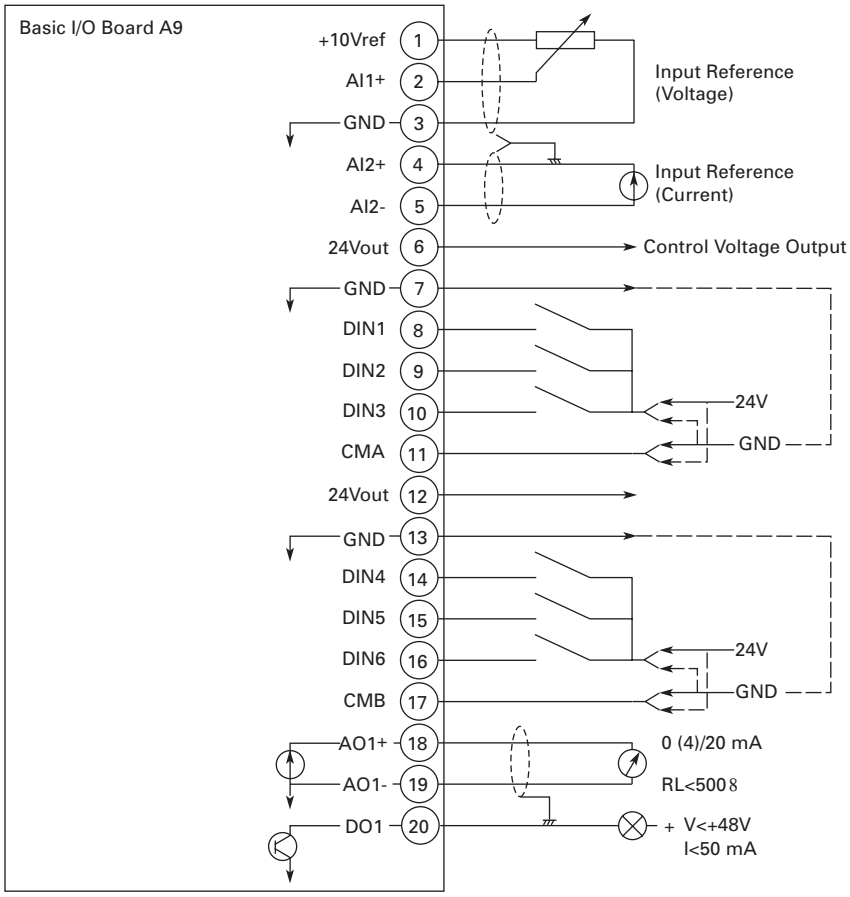

Figure 4-2: Option Board A9 Wiring Diagram

Table 4-3: Option Board A9 Terminal Descriptions

Terminal		Signal	Description and Parameter Reference
1	+10 V_{ref}	Reference voltage	Maximum current 10 mA
2	AI1+	Analog input, voltage	Default: 0 – +10V (R_i = 200 kΩ) -10V to +10V (joystick control) 0 – 20 mA (R_i = 250 Ω) *Select V or mA with jumper block X1* (**Figure 4-3**) Differential input if not connected to ground; allows ±20V differential mode voltage to GND
3	GND	Analog input common	
4	AI2+	Analog input	Default: 0 – 20 mA (R_i = 250 Ω) 0 – +10V (R_i = 200 kΩ) -10V to +10V (joystick control) *Select V or mA with jumper block X2* (**Figure 4-3**) Differential input if not connected to ground; allows ±20V differential mode voltage to GND
5	GND/AI2-	Analog input common	
6	24 V_{out}	24V control voltage (bi-directional)	±15%, 250 mA (all boards total); 150 mA (max. current from single board); Can be used as external power backup for the control (and fieldbus); Galvanically connected to terminal #12
7	GND	I/O ground	Ground for reference and controls; Galvanically connected to terminals #13, 19
8	DIA1	Digital input 1	R_i = min. 5 kΩ
9	DIA2	Digital input 2	
10	DIA3	Digital input 3	
11	CMA	Digital input common A for DIN1, DIN2 and DIN3	Must be connected to GND or 24V of I/O terminal or to external 24V or GND. Selection with jumper block X3. (**Figure 4-3**)
12	24 V_{out}	24V control voltage (bi-directional)	Same as terminal #6; Galvanically connected to terminal #6
13	GND	I/O ground	Same as terminal #7; Galvanically connected to terminals #7 & 19
14	DIB4	Digital input 4	R_i = min. 5 kΩ
15	DIB5	Digital input 5	
16	DIB6	Digital input 6	
17	CMB	Digital input common B for DIN4, DIN5 and DIN6	Must be connected to GND or 24V of I/O terminal or to external 24V or GND. Select with jumper block X3. (**Figure 4-3**)
18	A01+	Analog signal (+output)	Output signal range: 0 – 10V default Current: 0(4) – 20 mA, RL max 500 Ω or Voltage: 0 – 10V, RL >1 kΩ Selection with jumper block X6. (**Figure 4-3**)
19	A01-	Analog output common	Maximum V_{in} = 48V DC; Galvanically connected to terminals #7, 13
20	DO1	Digital output1	Open collector, Maximum current = 50 mA

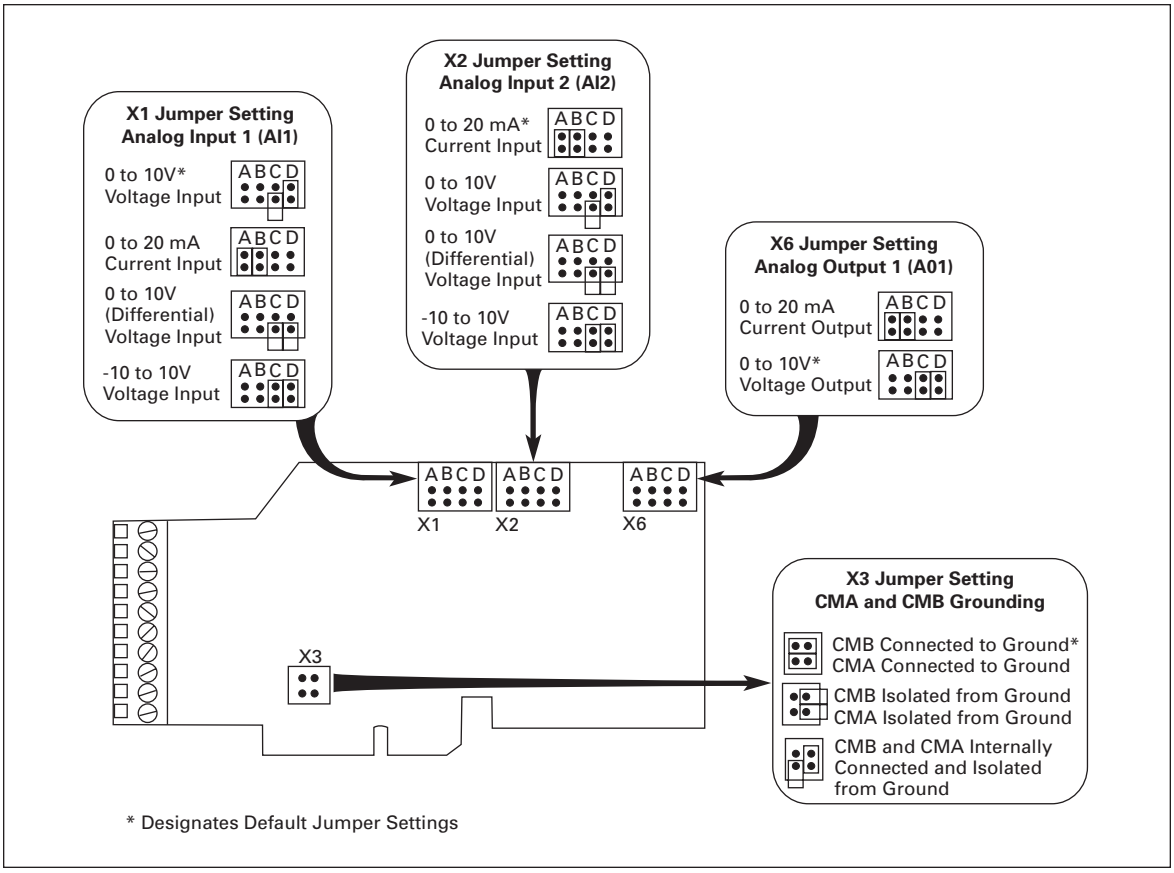

Figure 4-3: Option Board A9 Jumper Location and Settings

Wiring Option Board A2

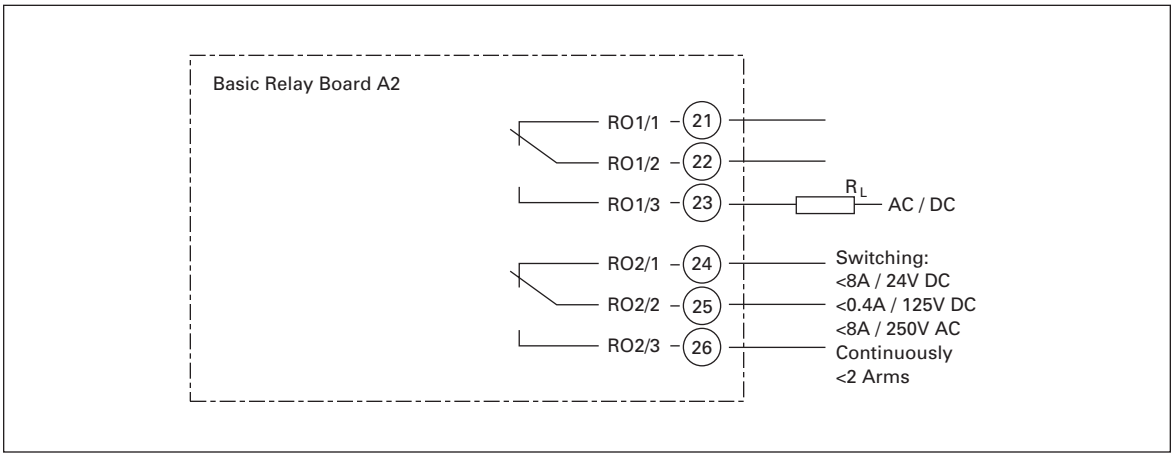

Figure 4-4: Option Board A2 Wiring Diagram

Table 4-4: Option Board A2 Terminal Descriptions

Terminal		Signal	Technical Information
21	RO1/1	Normally Closed (NC)	Switching Capacity: 24V DC / 8A 250V AC / 8A 125V DC / 0.4A Min Switching Load: 5V/10 mA Continuous Capacity: <2 Arms
22	RO1/2	Common	
23	RO1/3	Normally Open (NO)	
24	RO2/1	Normally Closed (NC)	Switching Capacity: 24V DC / 8A 250V AC / 8A 125V DC / 0.4A Min Switching Load: 5V/10 mA Continuous Capacity: <2 Arms
25	RO2/2	Common	
26	RO2/3	Normally Open (NO)	

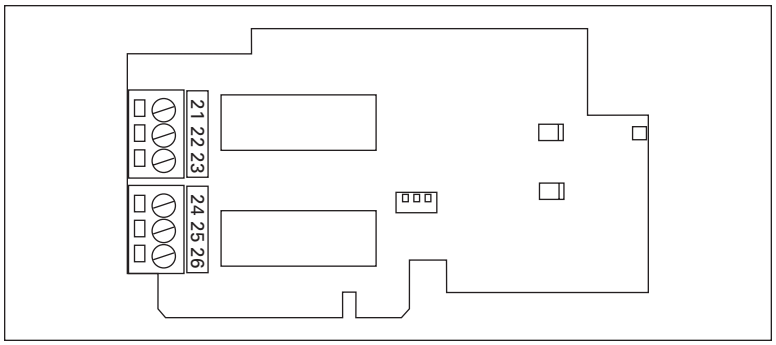

Figure 4-5: Option Board A2 Terminal Locations

Inverting the Digital Input Signal

The active signal level depends on which potential the common inputs CMA and CMB (terminals 11 and 17) are connected to. The alternatives are either +24V or ground (0V). See **Figure 4-6**.

The 24V control voltage and the ground for the digital inputs and the common inputs (CMA, CMB) can be sourced from either the internal 24V supply or an external supply.

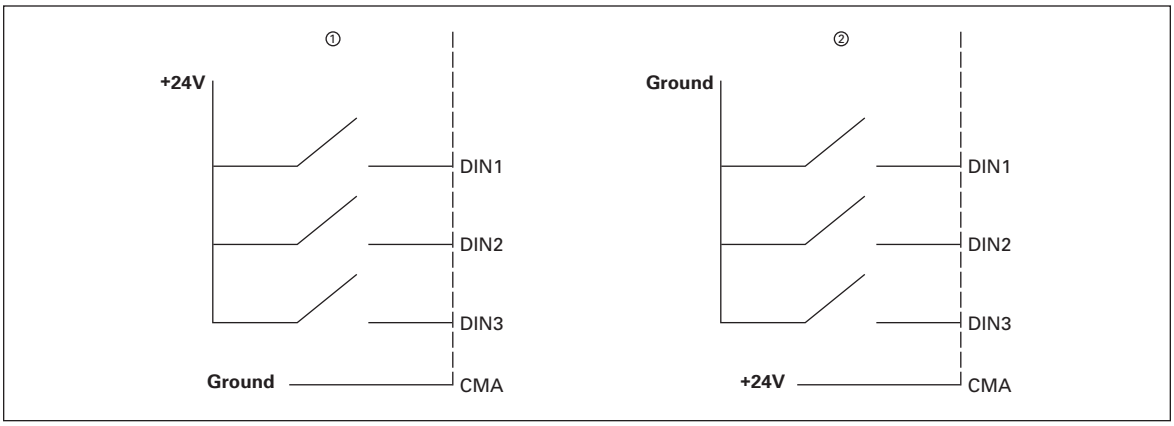

Figure 4-6: Positive/Negative Logic

① Positive logic (+24V is the active signal) = the input is active when the switch is closed.
② Negative logic (0V is the active signal) = the input is active when the switch is closed.

October 2007

Chapter 5 — Menu Information

Keypad Operation

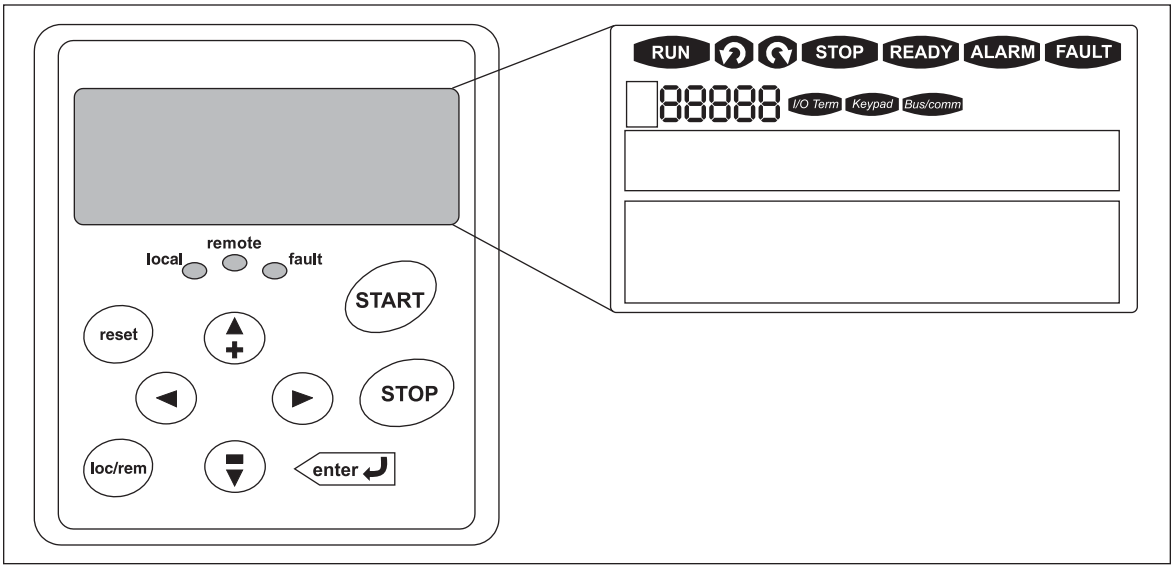

Figure 5-1: Keypad and Display

Table 5-1: LCD Status Indicators

Indicator	Description
RUN	**Run** Indicates that the SVX9000/SPX9000 is running and controlling the load. Blinks when a stop command has been given but the SVX9000/SPX9000 is still ramping down.
	Counterclockwise Operation The output phase rotation is BAC, corresponding to counterclockwise rotation of most motors.
	Clockwise Operation The output phase rotation is ABC, corresponding to clockwise rotation of most motors.
STOP	**Stop** Indicates that the SVX9000/SPX9000 is stopped and not controlling the load.
READY	**Ready** Indicates that the SVX9000/SPX9000 is ready to be started.
ALARM	**Alarm** Indicates that there is one or more active drive alarm(s).
FAULT	**Fault** Indicates that there is one or more active drive fault(s).
I/O Term	**I/O Terminal** Indicates that the I/O terminals have been chosen for control.
Keypad	**Keypad** Indicates that the keypad has been chosen for control.
Bus/comm	**Bus/Communications** Indicates that the communications bus control has been chosen for control.

Table 5-2: LED Status Indicators

Indicator	Description
local	**Local — Steady Illumination** Indicates that the SVX9000/SPX9000 is ready to be started and operated from the Local mode. **Local — Flashing** Indicates that the SVX9000/SPX9000 is ready for operating command to select Local or Remote operation.
remote	**Remote** Indicates that the SVX9000/SPX9000 is operating and controlling the load remotely.
fault	**Fault** Indicates that there is one or more active drive fault(s).

Table 5-3: Navigation Buttons

Button	Description
START	**Start** This button operates as the START button for normal operation when the "Keypad" is selected as the active control.
enter	**Enter** This button is used in the parameter edit mode to save the parameter setting and move to the next parameter … • to reset the Fault History if pressed while in the "Fault History" menu. • to confirm the acceptance of a change. • to change a virtual button status while in the "Button" menu. • to confirm the start-up list at the end of the Start-Up Wizard. • when the "Operate" menu is active, to exit the "Operate" submenu.
STOP	**Stop** This button has two integrated operations. The button operates as STOP button during normal operation … • motor STOP from the keypad, which is always active unless disabled by the "StopButtonActive" parameter. • used to reset the active faults.
reset	**Reset** Resets the active faults.
loc/rem	**Local / Remote** Switches between LOCAL and REMOTE control for start, speed reference and reverse functions. The control locations corresponding to local and remote can be selected within an application.

Table 5-3: Navigation Buttons (Continued)

Button	Description
◄	**Left Arrow** • navigation button, movement to left. • in parameter edit mode, exits mode, backs up one step. • cancels edited parameter (exit from a parameter edit mode). • When in "Operate" menu will move backward through menu. • At end of "Start-Up Wizard", repeats the "Start-Up Wizard" setup menu.
►	**Right Arrow** • navigation button, movement to right. • enter parameter group mode. • enter parameter mode from group mode. • When in "Operate" menu will move forward through menu.
▲ + ▼ −	**Up and Down Arrows** • move either up or down a menu list to select the desired menu item. • editing a parameter/password, while the active digit/character is scrolled. • increase/decrease the reference value of the selected parameter. • in the "Operate" menu, will cause the display of the current reference source and value and allow its change if the keypad is the active reference source. Used to set the password (if defined) when leaving the "Operate" menu. • scroll through the "Active Faults" menu when the SVX9000/SPX9000 is stopped.

Menu Navigation

Navigation Tips

- To navigate within one level of a menu, use the up and down arrows.
- To move deeper into the menu structure and back out, use the right and left arrows.
- To edit a parameter, navigate to show that parameter's value, and press the right arrow button to enter the edit mode. In edit mode, the parameter value will flash.
- When in edit mode, the parameter value can be changed by pressing the up or down arrow keys.
- When in edit mode, pressing the right arrow a second time will allow you to edit the parameter value digit by digit.
- To confirm the parameter change you must press the ENTER button. *The value will not change unless the ENTER button is pushed*.
- Some parameters can not be changed while the SVX9000/SPX9000 is running. The screen will display LOCKED if you attempt to edit these parameters while the drive is running. Stop the drive to edit these parameters. See the appropriate application manual for identification of these parameters specific to your chosen application.

Main Menu

The data on the control keypad are arranged in menus and submenus. The first menu level consists of M1 to M8 and is called the Main Menu. The structure of these menus and their submenus is illustrated in **Figure 5-2**. Some of the submenus will vary for each application choice.

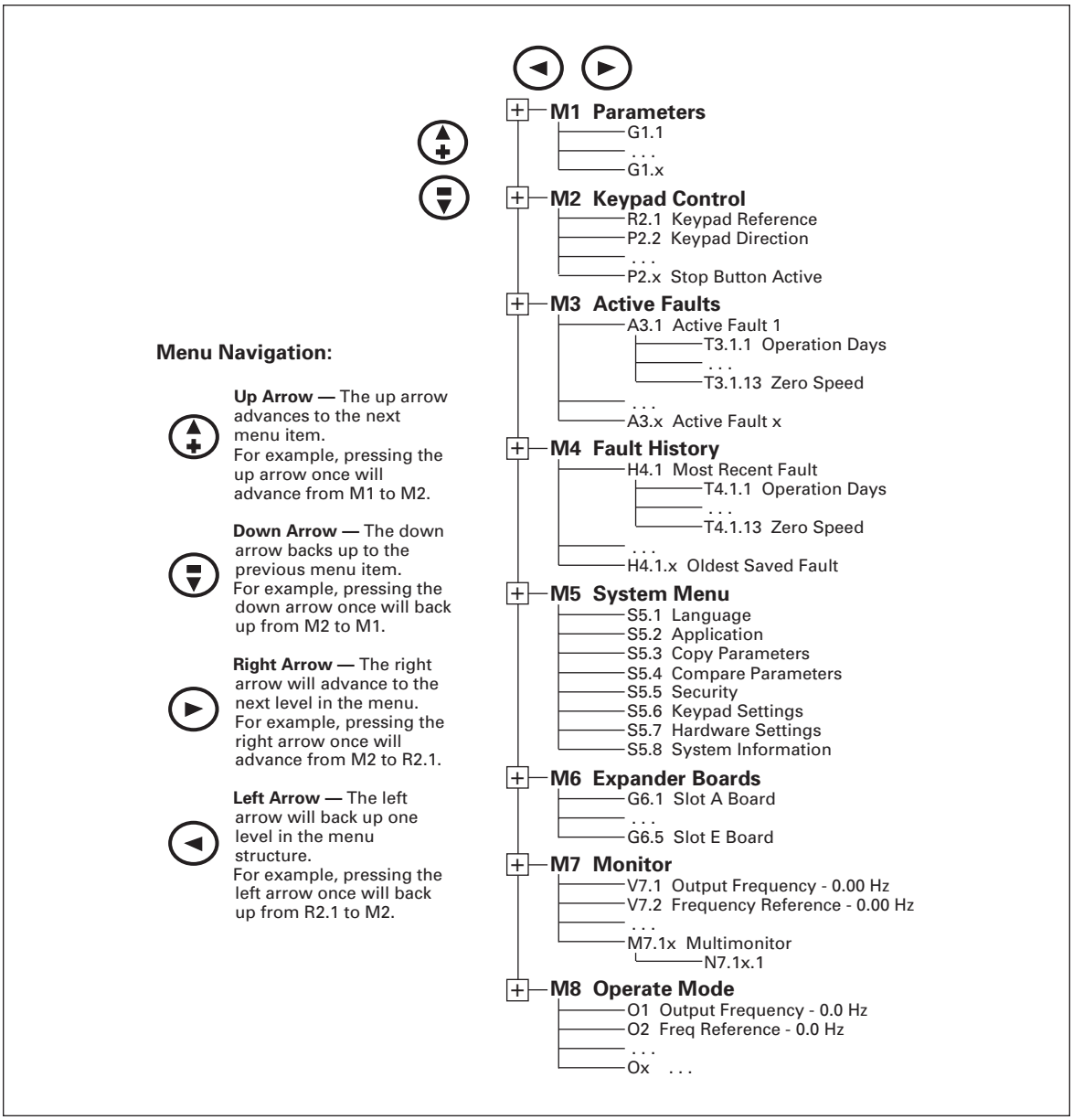

Figure 5-2: Main Menu Navigation

① Menu application dependent.

Parameter Menu (M1)

The Parameter Menu is a single or multi-level menu dependent upon the application in use, arranged by the parameter group items. **Figure 5-3** illustrates this for the Standard application. Parameters and parameter groups are explained in further detail in the appropriate application manual.

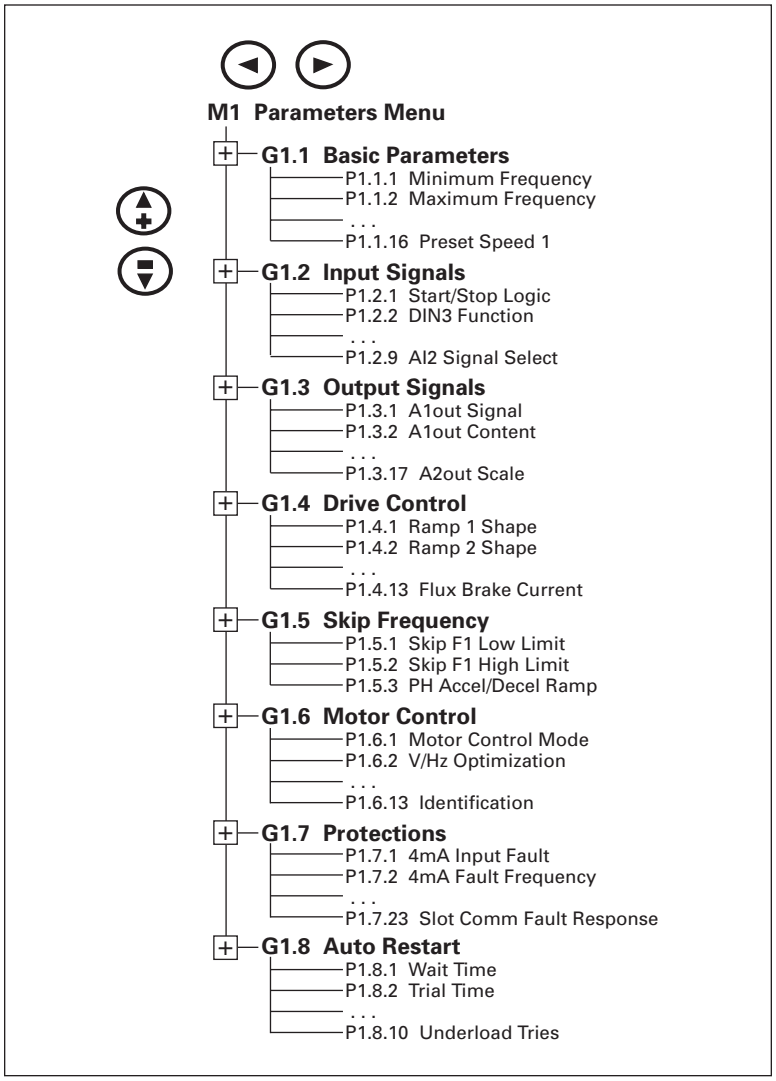

Figure 5-3: Parameter Menu Structure Example

Keypad Control Menu (M2)

In the Keypad Control Menu, you can set the frequency reference, choose the motor direction for keypad operation, and determine if the STOP button will be active at all times. See **Figure 5-4**.

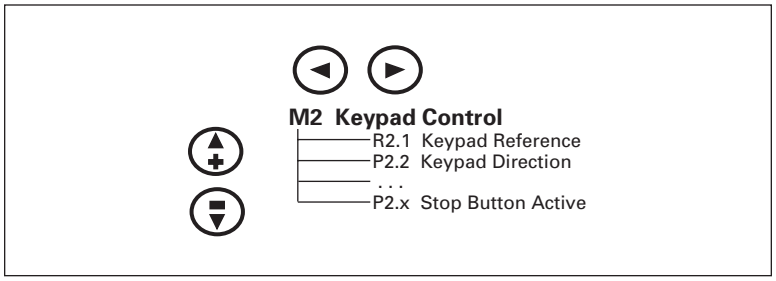

Figure 5-4: Keypad Control Menu

R2.1 Keypad Reference

Range: Min. Frequency — Max. Frequency
Units: Hertz
KEYPAD REFERENCE
This displays and allows the operator to edit the keypad frequency reference. A change takes place immediately. This reference value will not influence the output frequency unless the keypad has been selected as the active control place.

P2.2 Keypad Direction

Range: Forward, Reverse Default: Forward
KEYPAD DIRECTION
This allows the operator to change the rotation direction of the motor. This setting will not influence the rotation direction of the motor unless the keypad has been selected as the active control place.

P2.3 ① **Stop Button Active**

Range: Yes, No Default: Yes
STOPBUTTONACTIVE
By default, pushing the STOP button will **always** stop the motor regardless of the selected control place. If this parameter is set to **No**, the **STOP** button will stop the motor only **when the keypad has been selected as the active control place**.

① This parameter number varies for different applications.

Active Faults Menu (M3)

When a fault occurs, the SVX9000/SPX9000 stops. The sequence indication F1, the fault code, a short description of the fault and the fault type symbol will appear on the display. In addition, the indication FAULT or ALARM is displayed and, in case of a FAULT, the red LED on the keypad starts to blink. If several faults occur simultaneously, the sequence of active faults can be browsed with the Browser buttons. See **Figure 5-5**.

The active faults memory can store the maximum of 10 faults in the sequential order of appearance. The fault remains active until it is cleared with either the STOP or RESET buttons or with a reset signal from the I/O terminal. Upon fault reset the display will be cleared and will return to the same state it was before the fault trip.

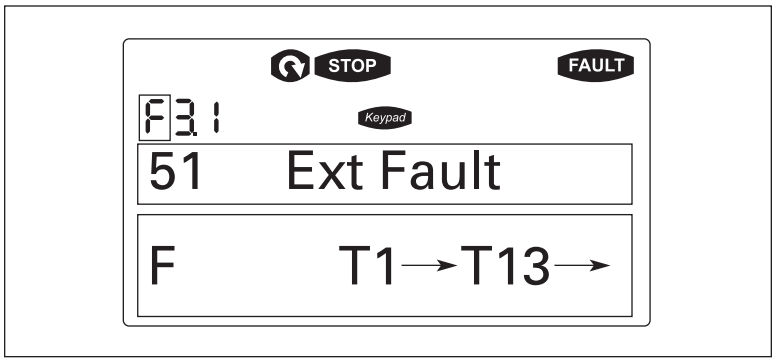

Figure 5-5: Active Fault Display Example

CAUTION

Remove any External Start signals or permissives before resetting the fault to prevent an unintentional restart of the SVX9000/SPX9000, which could result in personal injury or equipment damage.

Fault Type

Range: A, F, AR, FT

FAULT TYPE

There are four different types of faults. These faults and their definitions are given in **Table 5-4**.

Table 5-4: Fault Types

Fault Type	Fault Name	Description
A	Alarm	This type of fault is a sign of an unusual operating condition. It does not cause the drive to stop, nor does it require any special actions. The "A fault" remains in the display for about 30 seconds.
F	Fault	An "F fault" is a kind of fault that makes the drive stop. Actions need to be taken in order to restart the drive.
AR	Auto-Restart Fault	If an "AR fault" occurs the drive will also stop immediately. The fault is reset automatically and the drive tries to restart the motor. If the restart is not successful, a fault trip (FT) occurs.
FT	Fault Trip	If the drive is unable to restart the motor after an AR fault, an FT fault occurs. The effect of the "FT fault" is the same as that of the F fault — the drive is stopped.

Fault Code

Range: 1 – 54

Fault codes indicate the cause of the fault. A list of fault codes, their descriptions, and possible solutions can be found in **Appendix B — Fault and Warning Codes**.

Fault Time Data Record

Range: T.1 – T.13

In this menu, important data recorded at the time the fault is available. This feature is intended to help the user or the service person to determine the cause of fault. **Table 5-5** indicates the information that is recorded.

Table 5-5: Fault Time Data

Data	Units	Description
T.1 ①	D	Counted operation days (Fault 43: Additional code)
T.2 ①	hh:mm:ss (d)	Counted operation hours (Fault 43: Counted operation days)
T.3	Hz hh:mm:ss	Output frequency (Fault 43: Counted operation hours)
T.4 T.5 T.6 T.7 T.8	A V % % V	Motor current Motor voltage Motor power Motor torque DC bus voltage
T.9 T.10 T.11 T.12 T.13	°C — — — —	Unit temperature Run status Direction Warnings Zero speed

① Real time record.

If real time is set, T.1 and T.2 will appear as follows:

T.1	yyyy-mm-dd	Counted operation days (Fault 43: Additional code)
T.2	hh:mm:ss.sss	Counted operation hours (Fault 43: Counted operation days)

Fault History Menu (M4)

All faults are stored in the Fault History Menu, which can be viewed by using the Browser buttons. Additionally, the Fault time data record pages are accessible for each fault as in the Active Faults Menu described above. See **Figure 5-6**.

The SVX9000/SPX9000's memory can store a maximum of 30 faults, in the order of appearance. If there are 30 uncleared faults in the memory, the next occurring fault will erase the oldest fault from the memory.

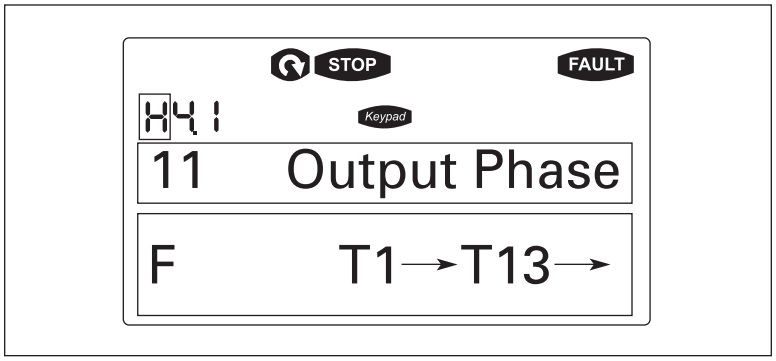

Figure 5-6: Sample Fault History Display

Note: Pressing the ENTER button for 3 seconds will clear the entire fault history.

System Menu (M5)

The controls associated with the general use of the drive, such as application selection, customized parameter sets or information about the hardware and software are located in the System Menu. Password protection can be activated by parameter ***S5.5.1***.

Descriptions of the system menu parameters are illustrated in **Figure 5-7**.

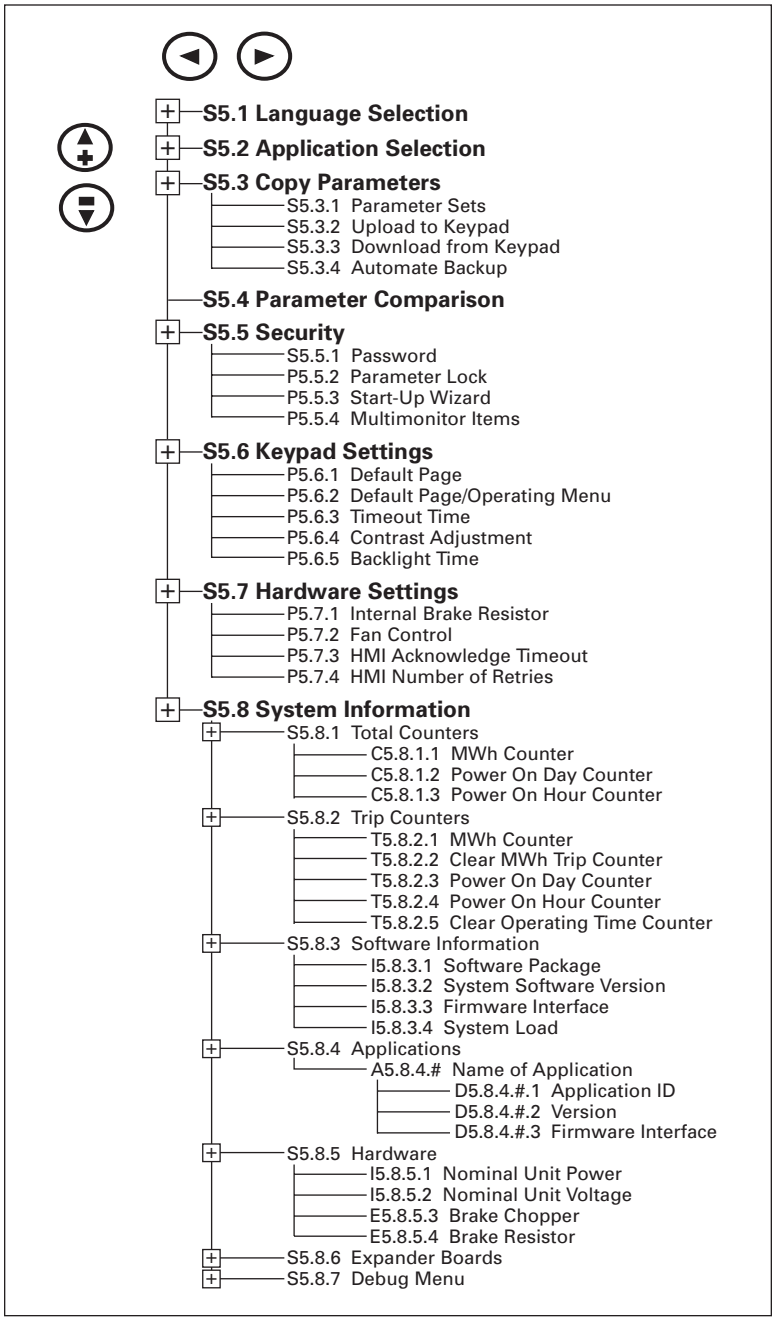

Figure 5-7: System Menu Structure

System Menu Parameters

S5.1 Language Selection

Range: English, Spanish, French, Portuguese Default: English

LANGUAGE

This parameter offers the ability to control the SVX9000/SPX9000 through the keypad in the language of your choice. Available languages are: English, Spanish, French and Portuguese.

S5.2 Application Selection

Default: Basic

APPLICATION

This parameter sets the active application.

When changing applications, you will be asked if you want the parameters of the new application to be uploaded to the keypad. If you wish to load the new application parameters, push the ENTER button. Pushing any other button saves the parameters of the previously used application in the keypad.

System Menu Copy Parameter Options (S5.3)

The parameter copy function is used when the operator wants to copy one or all parameter groups from one drive to another. All the parameter groups are first uploaded to the keypad, then the keypad is connected to another drive and then the parameter groups are downloaded to it (or possibly back to the same drive).

Note: Before any parameters can successfully be copied from one drive to another, the drive must be stopped when the parameters are downloaded to it.

S5.3.1 Parameter Sets

PARAMETER SETS

This parameter allows you to reload the factory default parameter values, and to store and load two customized parameter sets.

S5.3.2 Upload to Keypad

UP TO KEYPAD

This function uploads all existing parameter groups to the keypad.

S5.3.3 Download from Keypad

Range: 0 – 3 Default: 0 (All parameters)

DOWN FROM KEYPAD

This function downloads one or all parameter groups from the keypad to the drive.

0 All parameters
1 All, no motor
2 Application parameters

S5.3.4 Automatic Backup

Range: Yes, No Default: Yes

AUTO.BACKUP

This parameter activates and deactivates the parameter backup function. When the Parameter backup function is activated, the keypad makes a copy of the parameters and settings in the currently active application. When applications are changed, you will be asked if you wish the parameters of the **new** application to be uploaded to the keypad. For this to happen, push the ENTER button. If you wish to keep the copy of the parameters of the **previously used** application saved in the keypad push any other button.

Note: Parameters saved in the parameter settings of S5.3.1 will be deleted when applications are changed. If you want to transfer the parameters from one application to another you have to upload them to the keypad first.

System Menu Parameter Comparison Options (S5.4)

S5.4 Parameter Comparison

PARAMETER COMPARISON

With the Parameter Comparison function, you can compare the actual parameter values to the values of your customized parameter sets and those loaded to the control keypad.

The actual parameter values are first compared to those of the customized parameter Set1. If no differences are detected, a "0" is displayed on the lowermost line of the keypad.

If any of the parameter values differ from those of the Set1 parameters, the number of the deviations is displayed together with symbol P (e.g. P1 ➔ P5 = five deviating values).

By pressing the right arrow button once again you will see both the actual value and the value it was compared to. In this display, the value on the Description line (in the middle) is the default value, and the one on the value line (lowermost line) is the edited value. You can also edit the actual value by pushing the Right Arrow button.

Actual values can also be compared to Set2, Factory Settings and the Keypad Set values.

Security Menu Parameter Options (S5.5)

Note: The Security submenu is protected with a password. Store the password in a safe place.

S5.5.1 Password

Range: 0 – 65535 Default: 0

PASSWORD

The application selection can be protected against unauthorized changes with the Password function. When the password function is enabled, the user will be prompted to enter a password before application changes, parameter value changes, or password changes.

By default, the password function is not in use. If you want to activate the password, change the value of this parameter to any number between 1 and 65535. The password will be activated after the Timeout time (***Timeout Time***) has expired.

To deactivate the password, reset the parameter value to 0.

P5.5.2 Parameter Lock

Range: ChangeEnable, ChangeDisabl Default: ChangeDisabl

PARAMETER LOCK

This function allows the user to prohibit changes to the parameters. If the parameter lock is activated the text *LOCKED* will appear on the display if you try to edit a parameter value.

Note: This function does not prevent unauthorized editing of parameter values.

P5.5.3 Start-Up Wizard

Range: Yes, No Default: No

START-UP WIZARD

The Start-Up Wizard facilitates commissioning the SVX9000/SPX9000. If selected active, the Start-Up Wizard prompts the operator for the language and application desired and then advances through the start-up parameter list. After completion it allows the user to repeat the Start-Up Wizard or return to the default page, the Operate Menu. The Start-Up Wizard in always active for the initial power up of the SVX9000/SPX9000.

P5.5.4 Multimonitor Items

Range: ChangeEnable, ChangeDisabl Default: ChangeEnable

MULTIMON.ITEMS

The keypad display can display three actual monitored values at the same time. This parameter determines if the operator is allowed to replace the values being monitored with other values.

Keypad Settings (S5.6)

There are five parameters (***Default Page*** to ***Backlight Time***) associated with the keypad operation:

P5.6.1 Default Page

Default: 0

DEFAULT PAGE

This parameter sets the view to which the display automatically moves as the ***Timeout Time*** expires or when the keypad power is switched on. If the Default Page value is 0 this function is not activated, i.e. the last displayed page remains on the keypad display.

P5.6.2 Default Page in the Operating Menu

DEFAULT PAGE/OM

Here you can set the location in the Operating menu to which the display automatically moves as the set ***Timeout Time*** expires, or when the keypad power is switched on. See setting of ***Default Page*** parameter above.

P5.6.3 Timeout Time

Range: 0 – 65,535 Default: 30

Units: Seconds

TIMEOUT TIME

The ***Timeout Time*** setting defines the time after which the keypad display returns to the ***Default Page***.

Note: If the ***Default Page*** value is 0 the ***Timeout Time*** setting has no effect.

P5.6.4 Contrast Adjustment

CONTRAST ADJUSTMENT

If the display is not clear, you can adjust the keypad contrast with this parameter.

P5.6.5 Backlight Time

Range: 1 – 65,535 or Forever Default: 10

Units: Minutes

BACKLIGHT TIME

This parameter determines how long the backlight stays on before going out. You can select any time between 1 and 65,535 minutes or “Forever”.

Hardware Settings (S5.7)

The Hardware Settings submenu (S5.7) provides parameters for setting information on Internal brake resistor connection, Fan control, Keypad acknowledge timeout and Keypad retries.

P5.7.1 Internal Brake Resistor Connection

Range: Connected – Not Connected Default: Connected

INTERNBRAKERES

With this function you tell the SVX9000/SPX9000 whether the internal brake resistor is connected or not.

If your drive has an internal brake resistor, the default value of this parameter is "Connected". However, if it is necessary to increase braking capacity by installing an external brake resistor, or if the internal brake resistor is disconnected, it is advisable to change the value of this function to "Not Connected" in order to avoid unnecessary fault trips.

Note: The brake resistor is available as an option for all drives. It can be installed internally in frame sizes FR4 to FR6.

5.7.2 Fan Control

Range: Continuous, Temperature, First Start and Calc Temp Default: Continuous

FAN CONTROL

This function allows you to control the SVX9000/SPX9000's cooling fan. You can set the fan to run:

1 Continuous — fan runs continuously.
2 Temperature — based on the temperature of the unit. The fan is switched on automatically when the heatsink temperature reaches 60°C. The fan receives a stop command when the heatsink temperture falls to 55°C. The fan runs for about a minute after receiving the stop command or switching on the power, as well as after changing the value from "Continuous" to "Temperature".
3 First Start — after power up the fan is stopped until the run command is given and then fan runs continuously. This is mainly made for common DC-bus systems to prevent cooling fans to load charging resistors on power up moment.
4 Calc Temp — starting of cooling fan is based on calculated IGBT-temperature. When IGBT temp = 40°C, fan starts and when temp falls down to 30°C, fan stops.

Note: The fan runs continuously, regardless of this setting, when the SVX9000/SPX9000 is in RUN state.

P5.7.3 Keypad Acknowledge Timeout

Range: 200 – 5,000 Default: 200
Units: mseconds

KEYPAD ACK TIMEOUT

This function allows the user to change the timeout of the Keypad acknowledgement time.

Note: If the SVX9000/SPX9000 has been connected to a PC with a serial cable, the default values of ***Keypad Acknowledge Timeout*** and ***Number of Retries to Receive Keypad Acknowledgement*** must not be changed.

If the SVX9000/SPX9000 has been connected to a PC via a modem and there is delay in transferring messages, the value of ***Keypad Acknowledge Timeout*** must be set according to the delay as follows:

Example:

- Transfer delay between the SVX9000/SPX9000 and the PC is found to be = 600 ms
- The value of Keypad Acknowledge Timeout is set to 1200 ms (2 x 600, sending delay + receiving delay)
- The corresponding setting is then entered in the [Misc] section of the file 9000XDrive.ini:

  Retries = 5

  AckTimeOut = 1200

  TimeOut = 5000

It must also be considered that intervals shorter than the ***Keypad Acknowledge Timeout*** time cannot be used in SVX9000/SPX9000 drive monitoring.

P5.7.4 Number of Retries to Receive Keypad Acknowledge-ment

Range: 1 – 10 Default: 5

KEYPAD RETRY

With this parameter you can set the number of times the drive will try to receive an acknowledgement when it has not been received within the acknowledgement time (***Keypad Acknowledge Timeout***) or if the received acknowledgement is faulty.

System Information (S5.8)

This section contains hardware and software information as well as operation information.

S5.8.1 Total Counters

TOTAL COUNTERS

In the ***Total Counters*** page you will find information related to the SVX9000/SPX9000 operating times, i.e. the total numbers of MWh, operating days and operating hours. See **Table 5-6**.

Unlike the counters for the ***Trip Counters***, these counters cannot be reset.

Note: The Power On time counters, days and hours, operate whenever power is applied to the SVX9000/SPX9000.

Table 5-6: Total Counters

Number	Name	Description
C5.8.1.1	MWh counter	Megawatt hours total operation time counter
C5.8.1.2	Power On day counter	Number of days the SVX9000/SPX9000 has been supplied with power
C5.8.1.3	Power On hour counter	Number of hours the SVX9000/SPX9000 has been supplied with power

S5.8.2 Trip Counters

TRIP COUNTERS

The ***Trip Counters*** are counters whose values can be reset to zero. The resettable counters are shown in **Table 5-7**.

Table 5-7: Trip Counters

Number	Name	Description
T5.8.2.1	MWh counter	Megawatts hours since last reset
P5.8.2.2	Clear MWh counter	Resets megawatts hours counter
T5.8.2.3	Power On day counter	Number of days the SVX9000/SPX9000 has been run since the last reset
T5.8.2.4	Power On hour counter	Number of hours the SVX9000/SPX9000 has been run since the last reset
P5.8.2.5	Clr Optime cntr	Resets the operating day and hour counters

Note: The ***Trip Counters*** operate only when the motor is running.

S5.8.3 Software Information

SOFTWARE

The Software information page includes information on the following software related topics:

Table 5-8: Software Information

Number	Name	Description
I5.8.3.1	Software package	SVX00031V003
I5.8.3.2	System software version	11.53.6536
I5.8.3.3	Firmware interface	4.37
I5.8.3.4	System load	G9.1

S5.8.4 Application Information

APPLICATIONS

The Application information page includes information on not only the application currently in use but also all other applications loaded into the SVX9000/SPX9000. The information available is shown in **Table 5-9**. Note that the “x” in the table refers to the sequential number of the application in the list.

Table 5-9: Application Information

Name	Content
A4.8.4.x	Application name
D4.8.4.x.1	Application ID
D4.8.4.x.2	Version
D4.8.4.x.3	Firmware interface

S5.8.5 Hardware Information

HARDWARE

The Hardware information page provides information on the following hardware-related topics:

Table 5-10: Hardware Information

Number	Content
I5.8.5.1	Nominal power of the unit
I5.8.5.2	Nominal voltage of the unit
E5.8.5.3	Brake chopper
E5.8.5.4	Brake resistor

S5.8.6 Expander Board Information

EXPANDER BOARDS

This parameter and its sub-items provide information about the basic and option boards plugged into the control board as shown in **Table 5-11**. Note that the “x” in the table refers to the sequential number of the slot, with slot A being “1” and slot E being “5”.

Table 5-11: Expander Board Information

Number	Content
E5.8.6.x	Slot “x” board identification
E5.8.6.x.1	Operating state
E5.8.6.x.2	Software version

S5.8.7 Debug Menu

DEBUG

This menu is meant for advanced users and application designers. Contact the factory for any assistance needed.

Expander Board Menu (M6)

The Expander Board Menu makes it possible for the user to:

- to see what expander boards are connected to the control board and
- to access and edit the parameters associated with the expander board.

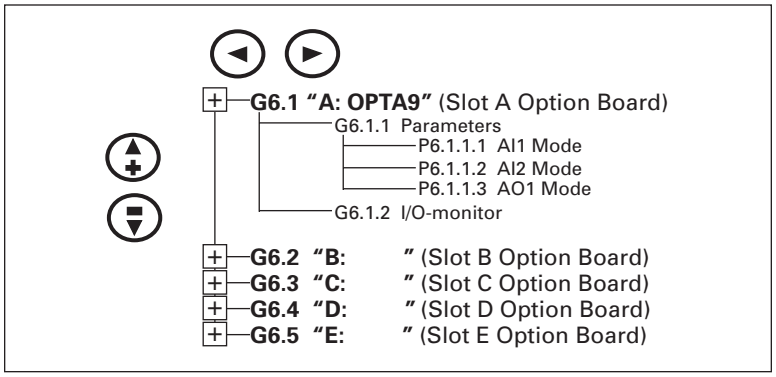

Figure 5-8: Expander Board Menu Structure

Example of Expander Board Parameters for Option Board A9

P6.1.1.1
AI1 Mode

Range: 1 – 5 Default: 3

AI1 MODE

Analog Input 1 input options:

1 0 – 20 mA
2 4 – 20 mA
3 0 – 10V
4 2 – 10V
5 -10 – +10VP

P6.1.1.2
AI2 Mode

Range: 1 – 5 Default: 1

AI2 MODE

Analog Input 2 input options:

1 0 – 20 mA
2 4 – 20 mA
3 0 – 10V
4 2 – 10V
5 -10 – +10VP

P6.1.1.3
AO1 Mode

Range: 1 – 4 Default: 1

AO1 MODE

Analog Output 1 output options:

1 0 – 20 mA
2 4 – 20 mA
3 0 – 10V
4 2 – 10V

Monitoring Menu (M7)

The Monitoring Menu items are meant for viewing parameter values during operation. Monitored values are updated every 0.3 sec. Monitored items are identified by item numbers V7.1 to V1.xx, where "xx" varies by application. **Table 5-12** provides an example of the monitored values for the **Standard** application.

Monitored parameters are not editable from this menu (See Parameter Menu [M1] to change parameter values).

Table 5-12: Monitoring Menu Items — Standard Application Example

Code	Signal Name	Unit	Description
V7.1	Output Frequency	Hz	Output frequency
V7.2	Frequency reference	Hz	Frequency reference setting
V7.3	Motor speed	rpm	Calculated motor speed
V7.4	Motor current	A	Measured motor current
V7.5	Motor torque	%	Calculated torque based on nominal motor torque
V7.6	Motor power	%	Calculated power based on nominal motor power
V7.7	Motor voltage	V	Calculated motor voltage
V7.8	DC bus voltage	V	Measured DC-bus voltage
V7.9	Unit temperature	°C	Heatsink temperature
V7.10	Calculated motor temperature	°C	Calculated motor temperature based on the motor nameplate information and the calculated motor load
V7.11	Analog Input 1	V	Voltage input at Terminals AI1+ and GND
V7.12	Analog Input 2	mA	Current input at Terminals AI2+ and AI2-
V7.13	DIN1, DIN2, DIN3	—	Digital input status (**Figure 5-9**)
V7.14	DIN4, DIN5,DIN6	—	Digital input status (**Figure 5-10**)
V7.15	DO1, RO2, RO3	—	Digital and relay output status (**Figure 5-11**)
V7.16	Analog I_{out}	mA	Current output at Terminals AO1+ and AO1-

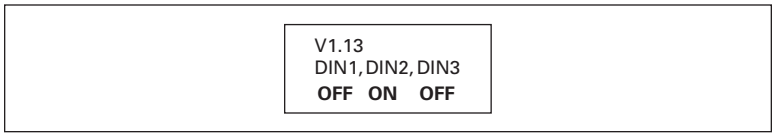

Figure 5-9: Digital Inputs — DIN1, DIN2, DIN3 Status

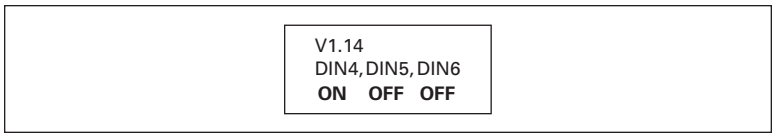

Figure 5-10: Digital Inputs — DIN4, DIN5, DIN6 Status

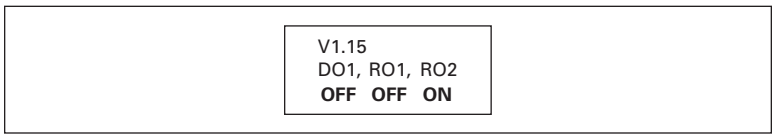

Figure 5-11: Digital and Relay Outputs — DO1, RO1, RO2 Status

Multimonitor (V7.17)

This parameter allows the viewing and selection (if allowed by System menu item, P5.5.4) of three simultaneously monitored items from the Monitored Menu Items shown in **Table 5-12**. Use the right arrow key to select the item to be modified and then the up or down arrow keys to select the new item. Press the ENTER key to accept the change.

Operate Menu (M8)

The Operate Menu provides a easy to use method of viewing key numerical Monitoring Menu items. Some applications also support the setting of reference values in this menu. The items displayed vary by application. **Table 5-13** is an example for the Standard application.

Table 5-13: Operate Menu Items — Standard Application Example

Code	Signal Name	Unit	Description
O.1	Output Frequency	Hz	Output frequency
O.2	FreqReference	Hz	Frequency reference
O.3	Motor Speed	rpm	Calculated motor speed
O.4	Motor Current	A	Measured motor current
O.5	Motor Torque	%	Calculated torque based on nominal motor torque
O.6	Motor Power	%	Calculated power based on nominal motor power
O.7	Motor Voltage	V	Calculated motor voltage
O.8	DC-Bus Voltage	V	Measured DC-bus voltage
O.9	Unit Temperature	°C	Heatsink temperature
O.10	MotorTemperature	%	Calculated motor temperature based on the motor nameplate information and the calculated motor load
R1	Keypad Reference	Hz	Keypad frequency reference setting

The menu is navigated by using the left and right arrow buttons. If a reference level is available for setting, the up and down arrow buttons adjust the value. To exit the Operate Menu to access the other menus, depress the ENTER button for 2 seconds. While in the other menus, if there is no keypad activity, the display will return to the Operate Menu after 30 seconds. **Figure 5-12** illustrates the Operate Menu button function.

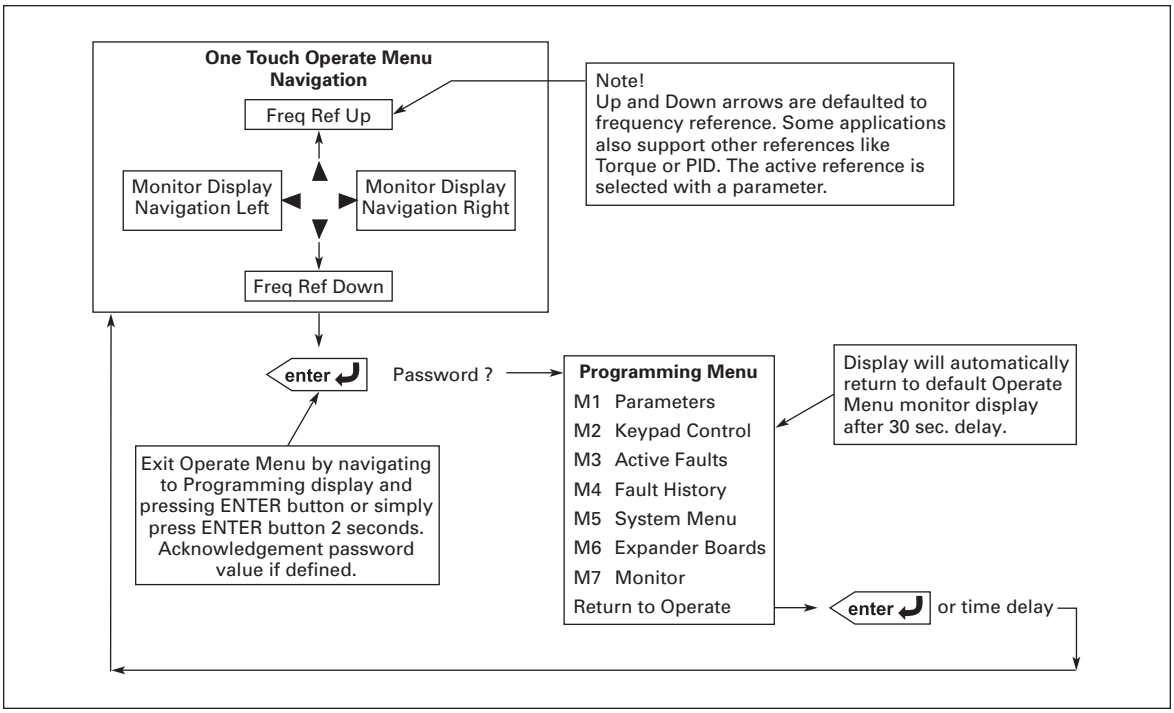

Figure 5-12: Operate Menu Navigation

Start-Up Wizard

Upon initial power up, the **Start-Up Wizard** guides the commissioner through the basic SVX9000/SPX9000 setup. The **Start-Up Wizard** may be set to function upon an application change by setting parameter P5.5.3.

Upon power up, the display will read:
“Startup Wizard”
“Press enter”

Upon pressing ENTER, the choice for the language to be used followed by the application desired are presented. The lists are navigated by using the right arrow and up and down arrow buttons. A selection is confirmed by pressing ENTER. After these two selections, the following text appears:
“Setup starts”
“Press enter”

When ENTER is pressed the setup parameter list is presented. The parameter value will be blinking allowing setting by the arrow buttons. The value is confirmed using the ENTER button, after which the next parameter in the list will be displayed.

After the last setup parameter is presented, the following text is displayed:
“Repeat setup?”
“Press ➔“

If the left arrow is pressed the Start-Up Wizard restarts. If the ENTER button is pressed the following is displayed:
“Setup done”

After this, the display returns to the default page, normally the Operate Menu.

Chapter 6 — Start-Up

Safety Precautions

Before start-up, observe the warnings and safety instructions provided throughout this manual.

WARNING

1. Internal components and circuit boards (except the isolated I/O terminals) are at utility potential when the SVX9000/SPX9000 is connected to the line. This voltage is extremely dangerous and may cause death or severe injury if you come in contact with it.
2. When the SVX9000/SPX9000 is connected to the utility, the motor connections U (T1), V (T2), W (T3) and DC-bus/brake resistor connections B–, B+ and R– are live even if the motor is not running.
3. Do not make any connections when the AF drive is connected to the utility line.
4. Do not open the cover of the AF drive immediately after disconnecting power to the unit, because components within the drive remain at a dangerous voltage potential for some time. Wait at least five minutes after the cooling fan has stopped and the keypad or cover indicators are dark before opening the SVX9000/SPX9000 cover.
5. The control I/O terminals are isolated from the utility potential, but relay outputs and other I/Os may have dangerous external voltages connected even if power is disconnected from the SVX9000/SPX9000.
6. Before connecting to the utility, make sure that the cover of the drive is closed.

Overview

The SVX9000/SPX9000 Control can be used to operate induction motors using the applications included in the system software delivered with the drive. Higher performance permanent magnet (PM) synchronous motors and other functions of the frequency converter (FC) are accomplished by loading special applications with the 9000XLoad software tool. The following sections describe how to commission the drive for motor control in all applications. See the All-in-One or special application manual for additional startup information or details on the parameters. Parameters are available (visible) based on the application selected, the type of control (SVX or SPX), the option boards installed in the control and the version of the system software loaded in the control. In general, the SVX controls are limited to V/Hz and open loop speed control of induction motors while the SPX control will work with any application and option board. Before starting the commissioning process, select the type of control, option boards, and size of the drive to meet the needs of the application and check that the latest system software is loaded. Open loop or sensorless control means motor control is accomplished by the standard drive unit without added speed/position feedback devices and associated option cards. Vector control means the drive can differentiate between torque producing and magnetizing current when reading motor phase currents. The "rotor flux oriented, current vector control" allows the AC drive to control an induction motor in the same manner as a separately excited DC motor.

Open Loop Vector Control Operations

The SVX9000/SPX9000 Control normally operates an induction motor in V/Hz or open loop vector control (speed control) mode. By default, the ID run is designed to automatically configure parameters for the programmable volts per Hertz (V/f) curve and make a stator resistance measurement for a standard induction motor. If the ID run does not give the proper performance, manual tuning of the control is described in later sections.

Frequency Controlled Application

For pumps and fans the application is usually frequency controlled and there is no need for high torque on low speed. A straight V/f curve ("linear" V/Hz ratio type) is all that is required for proper operation. Since pumps and fans are variable torque, selecting "Squared" for V/Hz ratio type will give some energy savings. Compensation for measured stator resistance voltage drop will improve performance and selecting "Auto Torque Boost" will help start the motor if necessary. The SLX/SVX controls will operate a PM motor open loop but manual tuning of the V/f curve is required.

Speed Controlled Application

When an application is speed controlled and high torque at low speed is needed, it is often necessary to complete the ID run; select auto torque boost to help start the motor and set the drive to speed control mode to compensate for the slip of the induction motor.

Closed Loop Vector Control Operations

Closed loop vector mode provides the best performance for speed and torque control; especially in low speed, high torque applications, including full torque at zero speed. The SPX is required for closed loop control with a speed or position feedback device. The closed loop ID run is similar to the open loop mode ID run.

PM Motor Control Operations

The SPX control can be used to control a synchronous PM motor open loop, or closed loop with a resolver or absolute encoder. Best low speed, high torque performance is achieved with a position feedback device. The High Performance Multi-purpose application has a selection for PM motor control. The PM motor Encoder ID run determines the zero position of the rotor and stores it to a parameter for use when the load is connected.

Sequence of Operation to Commission an Induction Motor

1. Read and follow all safety warnings and cautions in this manual.
2. At installation ensure:
   - That the SVX9000/SPX9000 and motor are connected to ground.
   - That the utility and motor cables are in accordance with the installation and connection instructions as detailed in **Chapter 3 — Power Wiring**.
   - That the control cables are located as far as possible from the power cables as detailed in **Chapter 4 — Control Wiring** and **Table 3-1**. That control cable shields are connected to protective ground. That no wires make contact with any electrical components in the SVX9000/SPX9000.
   - That the common input of each digital input group is connected to ground or +24V of the I/O terminal supply or an external supply as detailed here and **Figure 4-6**.
3. Check the quality of the cooling air as detailed in **Chapter 2 — Mounting**.
4. Check that moisture has not condensed inside the SVX9000/SPX9000.
5. Check that all START/STOP switches connected to the I/O terminals are in the STOP state.
6. Connect the SVX9000/SPX9000 to the utility and switch the power on. For the initial power up you will enter the **Start-Up Wizard**, which will guide you through application selection and basic parameter setup. See the **Start-Up Wizard** section at the end of **Chapter 5 — Menu Information** for more information. After completing the **Start-Up Wizard**, proceed to step 8. If this is not the initial power up, the keypad will default to the Operate Menu. Depress the ENTER button for 2 seconds to enter the Parameter Menu. Proceed to step 7.

7. Ensure that the Group 1 parameters match the application by setting — at minimum, the following parameters to match the motor nameplate:
   - Nominal voltage of the motor.
   - Nominal nameplate frequency of the motor.
   - Nominal nameplate full load speed of the motor.
   - Motor nominal current.
   - Motor power factor.
   - Motor type (Select PM motor in Group 6 of special app)
8. Perform either Test A or Test B without the motor connected to the SVX9000/SPX9000.

   Test A — Control from the Control Panel
   - Apply input power to the SVX9000/SPX9000.
   - Press the keypad START button.
   - If not in the Operate Menu, go to the Monitoring Menu and check that the output frequency follows the keypad reference.
   - Press the keypad STOP button.

   Test B — Control from the I/O Terminals
   - Apply input supply power to the SVX9000/SPX9000.
   - Change control from the keypad to the I/O terminals using the LOCAL/REMOTE button.
   - Start the drive by closing the START/STOP input on DIN1.
   - Change the frequency reference setting on AI1.
   - If not in the Operate Menu, go to the Monitoring Menu and check that the output frequency follows the frequency reference.
   - Stop the drive by opening the START/STOP input on DIN1.
9. Disconnect all power to the SVX9000/SPX9000. Wait until the cooling fan on the unit stops and the indicators on the panel are not lit. If no keypad is present, check the indicators in the control panel cover. Wait at least five more minutes for the DC bus to discharge. Connect the motor to the SVX9000/SPX9000. If possible, perform a startup test or ID run with the motor connected to the SVX9000/SPX9000 but not connected to the process. If the SVX9000 must be tested with the motor connected to the process, perform it under no-load conditions.

10. Repeat test 8A or 8B to check operation of the motor without the process or load. Note for proper motor current, voltage and direction of shaft rotation. If an encoder card is installed, set encoder parameters in the expander board menu and monitor frequency and speed from the encoder board. Frequency should match output frequency of the drive with a positive value for forward direction. If encoder frequency is opposite; change motor phase order, encoder connection or select “invert” on the expander board menu. For many pump or fan applications, no tuning is required. If further tuning is necessary, perform the tuning while the motor is disconnected from the process.
11. Perform ID Run. Setting the identification parameter to the appropriate value Par/group P1.6.16 followed by a start command within 20 seconds activates automatic identification. (See test 8A or 8B for start command.) Upon completion, cancellation by a stop command or if timely start is not received, the parameter will reset to its default setting. Possible ID run selections are as follows:
    - OL V/f Ratio — The drive is run at zero speed to identify the motor parameters. (Earlier system software version.)
    - OL V/f +Boost — The drive is run at zero speed to identify the motor parameters and automatic torque boost is turned on. (Earlier system software version.)
    - Identification without motor run — The drive is run at zero speed to identify the motor parameters.
    - Identification with motor run — The drive is run at 2/3 rated speed to identify the motor parameters. (No load on motor.)
    - Encoder ID run — Identifies the shaft zero position when using PM motor with absolute encoder or resolver feedback.
12. When ID Run is complete as shown by a stop indication on the keypad, reset the drive with a stop command according to Test 8A or 8B. Set the motor control mode to OL Speed Control, CL Speed Control if appropriate for the application and repeat Test 8A or 8B.
13. If necessary, skip to the next section to perform manual tuning functions before connecting the motor to the process.
14. Disconnect all power to the SVX9000/SPX9000. Wait until the cooling fan on the unit stops and the indicators on the panel are not lit. If no keypad is present, check the indicators in the control panel cover. Wait at least five more minutes for the DC bus to discharge. Connect the motor to the driven load making sure mechanical system requirements are met. Make sure that the driven load can be run safely and that no hazard exists to any personnel. Repeat test 8A or 8B.

Manual Tuning of the SVX9000/SPX9000

Proper tuning of the open loop speed control will give better torque control accuracy for improved motor performance. The aim of tuning is to get the motor model as close to the actual motor as possible through proper setting of parameters. Open loop tuning consists of three functions, 1) V/f curve tuning, 2) stator resistance measurement, and 3) compensation for slip.

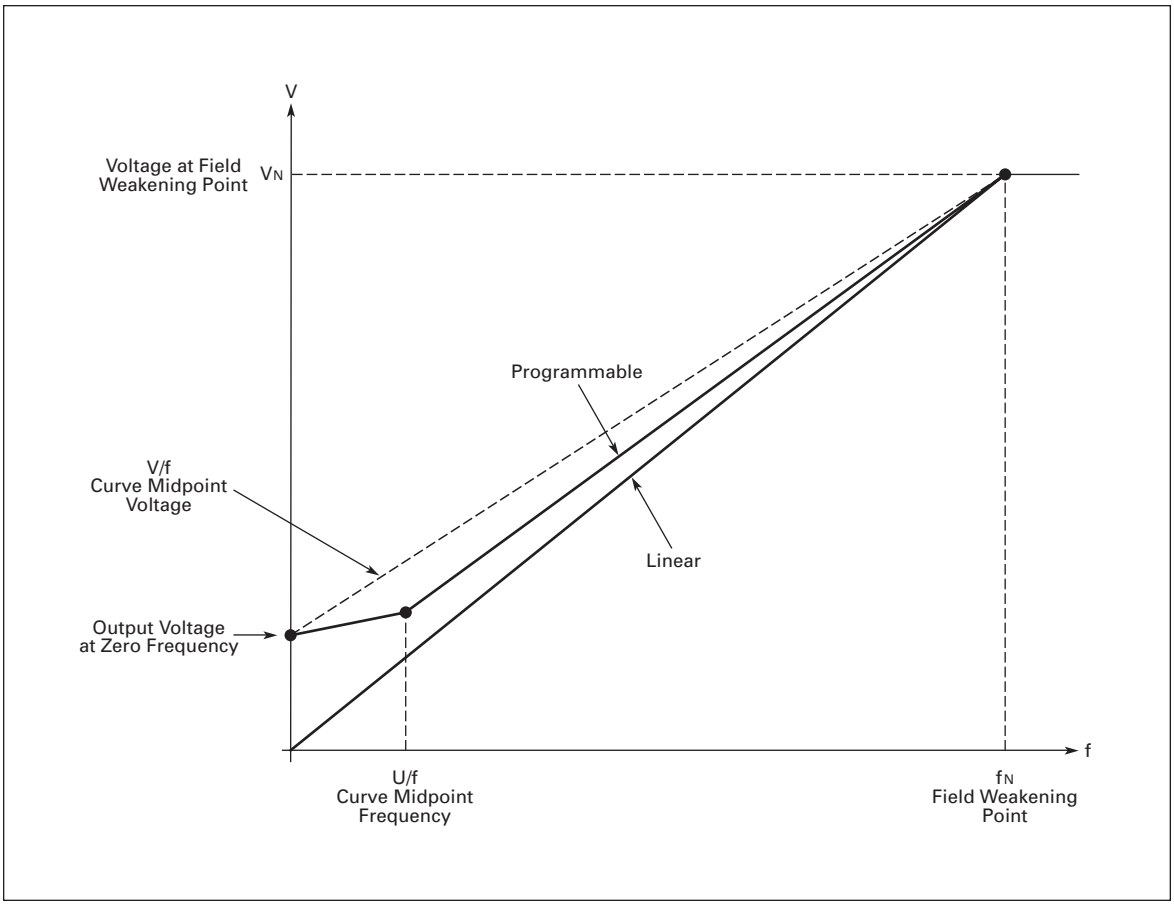

Figure 6-1: Open Loop Tuning

V/f- Curve Manual Tuning

When tuning the V/f — curve manually (not using identification run) the motor shaft must be unloaded and the motor control mode set to frequency control (P1.6.1). The following parameters are adjusted to tune the V/f curve:

Parameters

V/f ratio selection	P1.6.3
Field weakening point	P1.6.4
Voltage at field weakening point	P1.6.5
V/f curve midpoint frequency	P1.6.6
V/f curve midpoint voltage	P1.6.7
Output voltage at zero frequency	P1.6.8

When using a linear V/f curve with increased zero frequency voltage ensure that the motor current does not increase too much between 3 – 7 Hz.

Tuning Steps

Set the motor nameplate values.

Nominal voltage of motor	P1.1.6
Nominal frequency of motor	P1.1.7
Nominal speed of motor	P1.1.8
Nominal current of motor	P1.1.9
Motor Power Factor (Cos Phi)	P1.1.10

Run the motor unloaded at 2/3 rated speed using a frequency reference. Read the motor current from the monitoring menu (V7.4) or use 9000XDrive for monitoring. This current is the motor magnetizing current. This value should match a nameplate magnetizing current value if given.

If the motor will only be run in closed loop, skip to section on closed loop vector control tuning.

Change the V/f- curve ratio selection to programmable-mode = 2 (P1.6.3).

Run motor with zero frequency reference and increase motor zero point voltage (P1.6.8) until motor current is approximately same as the motor magnetizing current. (If motor is only in the low frequency area for short periods, it is possible to use up to 80% of rated current).

Set then the midpoint voltage (P1.6.7) to 1.4142*P1.6.8 ($\sqrt{2}$ * Zero Point Voltage) and midpoint frequency (P1.6.6) to value P1.6.8/100%*P1.1.7. ([ZeroPoint Voltage/100%]*Nominal frequency of motor.)

$$P1.6.7 = \sqrt{2} * P1.6.8 \qquad P1.6.6 = \frac{P1.6.8}{100} * P1.1.7$$

Hint for the 9000X Drive user:

When zero point voltage is set correctly, run motor with slow ramp (~20 s) to 1/2 of rated frequency. Show output frequency and motor current in the 9000XDrive monitoring window. If midpoint parameters are set correctly, motor current should be stable during acceleration. (Picture 2: heavy solid line).

If there is a peak in the monitored motor current, (heavy dashed in picture 2.) check what the output frequency is at the max current point, and set this value for midpoint frequency (P1.6.6). Then readjust midpoint voltage for a stable current performance during acceleration.

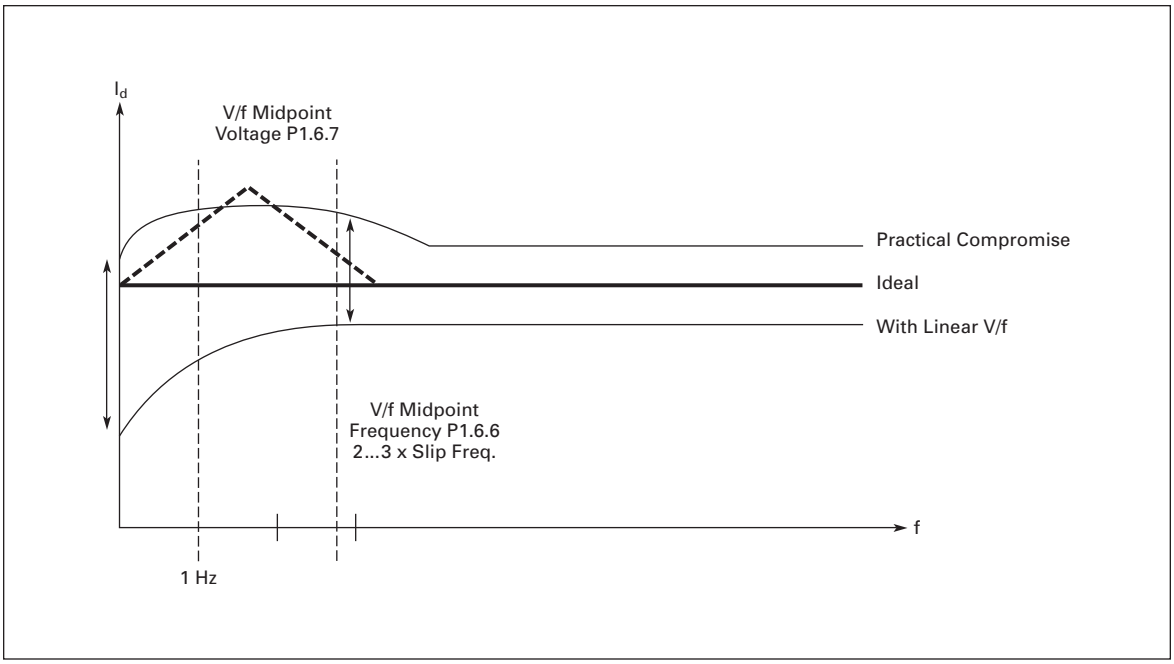

Figure 6-2: Motor Current after V/f-Curve Tuning

Stator Resistance Measurement Using Dc-brake at Start

1. Define the DC-brake current (=motor nominal current) (P1.4.8).
2. Set the DC-brake time at start to 2 seconds (P1.4.11).
3. Give start command.

The drive will correct the stator impedance to improve the motor torque calculation. This also improves slip compensation accuracy. (Stator resistance voltage loss compensation, see picture 3.)

If the DC-brake time at start is set back to zero, the calculated stator impedance value goes back to default if the drive's power is switched off. (Identification will retain all values in memory.)

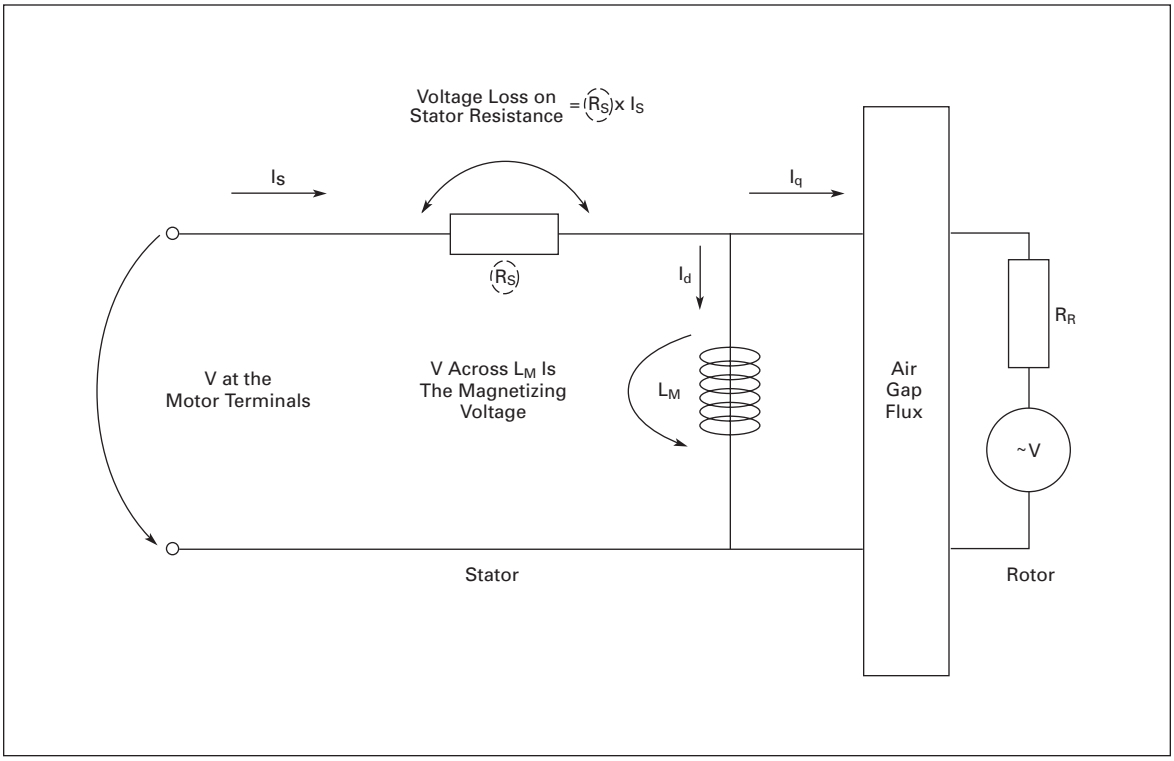

Figure 6-3: Motor Equivalent Circuit

Change the motor control mode to the speed control (P1.6.1 = 1)

Change the V/f-optimization (Auto Torque Boost) to on if more torque is needed on low frequencies (P1.6.2). Note, this will increase motor voltage while loading motor, check motor current draw.

Note: In high torque — low speed applications — it is likely that the motor will overheat. If the motor has to run a prolonged time under these conditions, special attention must be paid to cooling the motor.

Slip Compensation In Open Loop

The drive uses motor torque and motor nominal RPM to compensate slip. If motor nominal RPM is 1710 -> nominal slip is 90 RPM. And when motor torque is 50% slip is 45 RPM. To keep reference speed drive must increase output frequency by:

$$\frac{50\%*90\ \text{RPM}}{1500\ \text{RPM}} * 50{,}00\ \text{Hz} = 1{,}50\ \text{Hz}$$

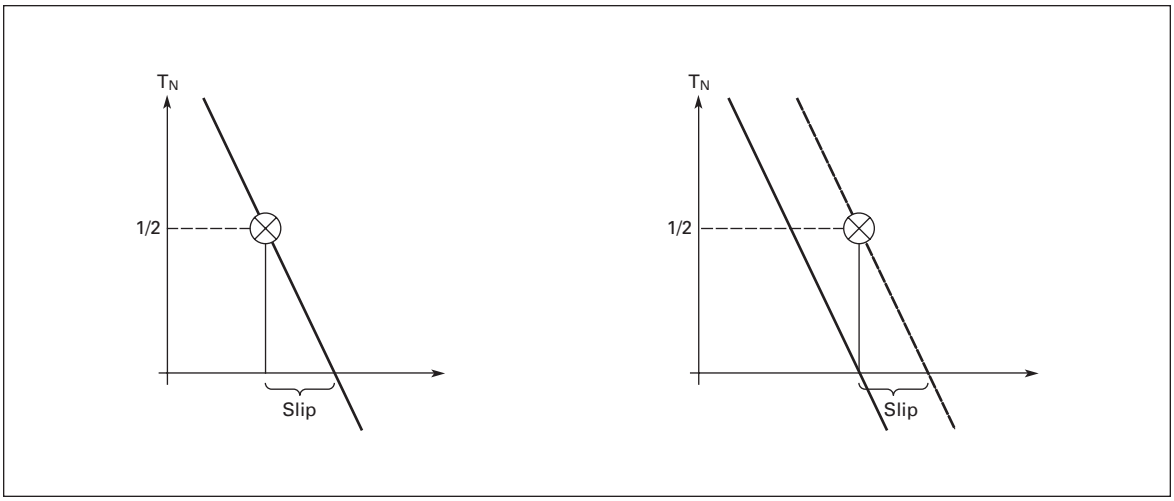

Figure 6-4: Left: OL Speed Control Off. Right: OL Speed Control ON.

Closed Loop Vector Control Manual Tuning (SPX9000 Only)

For some non-standard motors the auto-tune is not sufficient. Closed lop control mode is used, when enhanced performance near zero speed and better steady stats and dynamic speed accuracy at higher speeds are needed.

Tuning Steps

Set the motor nameplate values.

Nominal voltage of motor	P1.1.6
Nominal frequency of motor	P1.1.7
Nominal speed of motor	P1.1.8
Nominal current of motor	P1.1.9
Motor Power Factor (Cos Phi)	P1.1.10

Check encoder Pulse/Revolution rate and set this value to expander menu P6.3.1.1. Parameter is only visible if OPTA4 or OPTA5 is installed to slot C.

Set motor control mode to open loop frequency control (P1.6.1 = 0).

Run the motor unloaded at 2/3 rated speed using a frequency reference. Read the motor current from the monitoring menu (V1.4) or use 9000X Drive for monitoring. This current is the motor magnetizing current. This value should match a nameplate magnetizing current value if given.

Check the expander board menu (monitoring page V6.3.2.1), that the encoder frequency is approximately the same as the output frequency. Check also, that the direction is correct. If the encoder frequency direction is opposite the output frequency (negative value), change the motor phase order to encoder connection. The expander board menu also has a parameter to invert the signal if rewiring is not an option.

Set motor control mode to closed loop (P1.6.1 = 3 or 4).

Set the motor magnetizing current P1.6.17.1 (measured in step 4).

Fine Tuning

Tune parameter P1.6.17.6 (Slip Adjust) to get the motor voltage slightly above the linear V/f-curve when motor is loaded and slightly below when motor is generating.

Using the linear V/f-curve (P1.6.3 = 0), run the motor in frequency control mode (P1.6.1 = 0) at about 2/3 of the motor nominal frequency and check motor voltage (V7.7).

At 40 Hz, voltage should be 40/60*460V = 307V.

Run the motor in closed loop control mode with same reference and check the motor voltage. Adjust P1.6.17.6 (Slip Adjust) so that motor voltage is slightly above the linear V/f-curve. If motor voltage is low, decrease the value of Slip Adjust (P1.6.17.6).

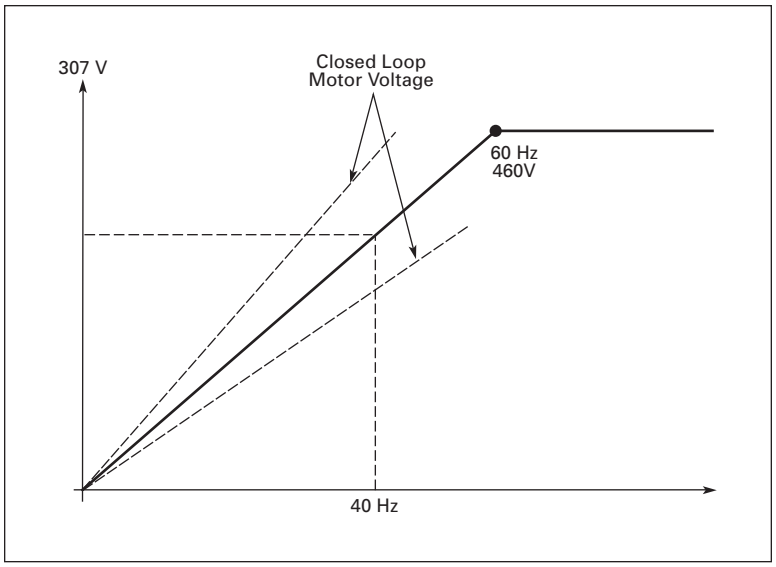

Figure 6-5: Closed Loop Motor Voltage

Adjust the following parameters for optimum performance in closed loop mode:

Fine Tuning Parameters

613 Speed control P gain

Sets the gain for the speed controller in % per Hz. 100 means nominal torque with 1 Hz frequency error.

614 Speed control I time

Sets the integral time constant for the speed controller. Too short integration time makes the control unstable.

620 Load drooping

Setting a proper value to the LoadDrooping parameter enables the load drooping. This function causes the speed to decrease as the load torque increases. At rapid load changes this gives a smoother torque response, when a part of the required power is taken from the system inertia. This operation causes a constant, torque-dependent steady-state error in speed response.

626 Acceleration compensation

Sets the inertia compensation to improve speed response during acceleration and deceleration. The time is defined as acceleration time to nominal speed with nominal torque. This parameter is active also in advanced open loop mode.

627 Magnetizing current at start

628 Magnetizing time at start

These parameters are certain type of DC-brake in start. With these parameters it is possible to shorten the time needed to fully magnetize the motor, especially when motor is big.

615 Zero speed time at start

After giving the start command the drive will remain at zero speed for the time defined by this parameter. The ramp is released to follow the set frequency/speed reference after this time has elapsed.

616 Zero speed time at stop

The drive will remain at zero speed with controllers active for the time defined by this parameter after reaching the zero speed when a stop command is given. This parameter has no effect, if the selected stop function (P1.4.7) is coasting.

621 Start-up torque

This parameter selects the start-up torque.

Torque Memory is used in crane applications. Start-up Torque FWD/REV can be used in other applications to help the speed controller.

0 = Not Used
1 = TorqMemory
2 = Torque Ref
3 = Torq.Fwd/Rev

633 Start-up torque, forward

Sets the start-up torque for forward direction, if selected with par. 1.6.17.12.

634 Start-up torque, reverse

Sets the start-up torque for reverse direction, if selected with par. 1.6.17.13.

107 Current limit

This parameter determines the maximum motor current from the frequency converter. The parameter value range differs from size to size. On closed loop control mode this limits torque (= torque producing current).

For example, if motor magnetizing current is 2.0 A and current limit is 1.0 A, total motor current can be:

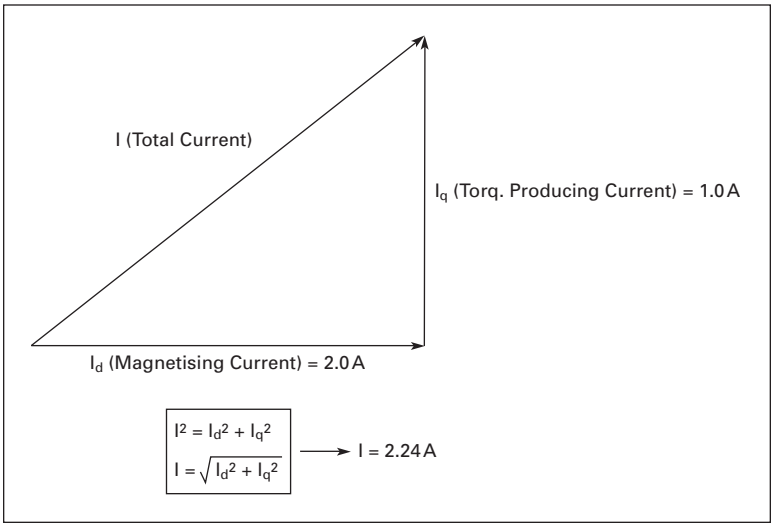

Figure 6-6: Closed Loop Current Limit

Appendix A — Technical Data

General

Figure A-1 shows a block diagram of the SVX9000/SPX9000 drive. The SVX9000/SPX9000 physically consists of two sections, the Power Unit and the Control Unit. The three-phase **AC Choke** with the **DC-Link Capacitor** form a LC filter which together with the **Rectifier** produce the DC voltage for the **IGBT Inverter** block. The **AC Choke** smooths the disturbances from the utility into the SVX9000/SPX9000 as well as the high frequency disturbances caused by the SVX9000/SPX9000 on the utility line. It also improves the input current waveform to the SVX9000/SPX9000. The **IGBT Inverter** produces a symmetrical three-phase pulse width modulated adjustable frequency AC voltage to the motor.

The **Motor and Application Control** block contains a microprocessor with customized software. The microprocessor controls the motor based on **Measured Signals**, parameter value settings and commands from the **Control I/O Block** and the **Control Module**. The **Motor and Application Control** block commands the **Motor Control ASIC** which calculates the IGBT switching positions. **Gate Drivers** amplify these signals for driving the **IGBT Inverter**.

The **Control Keypad** is a link between the user and the SVX9000/SPX9000. With the **Control Keypad** the user can set parameter values, read status information and issue control commands. The **Control Keypad** is removable and can be mounted externally and connected with the appropriate cable. Instead of the **Control Keypad**, a PC can be used to control the SVX9000/SPX9000 by cable connecting it where the **Control Keypad** is normally connected or through an option board.

The **Control I/O Block** is isolated from line potential and may be connected to or isolated from ground by the choice of the control I/O board which is used. OPTA8 is isolated ground, OPTA1 and OPTA9 are not.

Input and Output EMC-Filters are not required for the functionality of the SVX9000/SPX9000. They are only needed for compliance with the EU EMC directive as detailed in the following section.

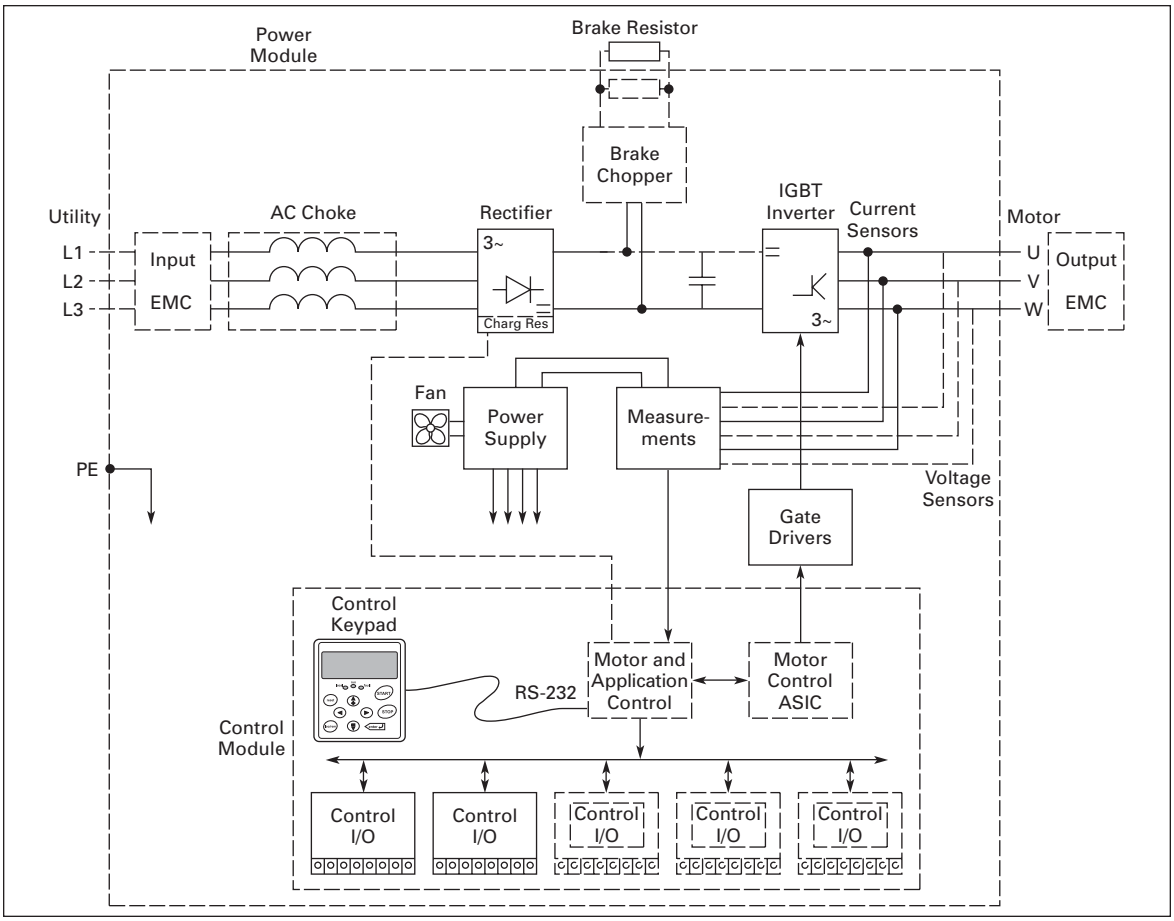

Figure A-1: SVX9000/SPX9000 Block Diagram

Specifications

Table A-1: SVX9000/SPX9000 Drive Specifications

Description	Specification
Power Connections	
Input Voltage (V_{in})	208 – 240V +10%/-15% 380 – 500V +10%/-15% 525 – 690V +10%/-15%
Input Frequency (f_{in})	50/60 Hz (variation up to 45 – 66 Hz)
Connection to Utility Power	Once per minute or less (typical operation)
Maximum Symmetrical Supply Current	208 – 240V, 100 kAIC 380 – 500V, 100 kAIC 525 – 690V, 100 kAIC
Motor Connections	
Output Voltage	0 to V_{in}
Continuous Output Current	Ambient temperature max. +122°F (+50°C), overload 1.5 x I_L (1 min. out of 10 min.)
Starting Current	200% for 2 seconds
Output Frequency	0 to 320 Hz
Frequency Resolution	0.01 Hz

Table A-1: SVX9000/SPX9000 Drive Specifications (Continued)

Description	Specification
Control Characteristics	
Control Method	SVX Frequency Control (V/f) SVX Open Loop Sensorless Vector SPX Open Loop Sensorless Vector Control SPX Closed Loop Control
Switching Frequency	Adjustable with Parameter 2.6.9 208 – 230V: 3/4 – 15 hp: 1 to 16 kHz; default 10 kHz 20 – 30 hp: 1 to 10 kHz; default 3.6 kHz 380 – 500V: 1 – 30 hp: 1 to 16 kHz; default 10 kHz 40 – 200 hp: 1 to 10 kHz; default 3.6 kHz 525 – 690V All Sizes: 1 to 6 kHz; default 1.5 kHz
Frequency Reference	Analog Input: Resolution 0.1% (10-bit), accuracy ±1% Panel Reference: Resolution 0.01 Hz
Field Weakening Point	30 to 320 Hz
Acceleration Time	0.1 to 3000 sec.
Deceleration Time	0.1 to 3000 sec.
Braking Torque	DC brake: 15% to 150% x T_n (without brake option)
Environment	
Ambient Operating Temperature	14°F (-10°C), no frost to 122°F (+50°C)
Storage Temperature	-40°F (-40°C) to 158°F (70°C)
Relative Humidity	0 to 95% RH, non-condensing, non-corrosive, no dripping water
Air Quality	Chemical vapors: IEC 60721-3-3, unit in operation, class 3C2 Mechanical particles: IEC 60721-3-3, unit in operation, class 3S2
Altitude	100% load capacity (no derating) up to 3300 ft. (1000m); 1% derating for each 330 ft. (100m) above 3300 ft. (1000m); max. 10000 ft. (3000m)
Vibration	EN 50178, EN 60068-2-6 5 to 50 Hz, displacement amplitude 1 mm (peak) at 3 to 15.8 Hz, Max. acceleration amplitude 1 G at 15.8 to 150 Hz
Shock	EN 50178, EN 60068-2-27 UPS Drop test (for applicable UPS weights) Storage and shipping: max. 15 G, 11 mS (in package)
Enclosure Class	NEMA 1/IP21 available all ratings NEMA 12/IP54 available all ratings
Standards	
EMC (at default settings)	Immunity: Fulfils all EMC immunity requirements Emissions: EN 61800-3
Safety	UL 508C
Product	IEC 61800-2
Control Connections	
Analog Input Voltage	0 to 10V, R – 200 kΩ differential (-10 to 10V joystick control) Resolution 0.1%; accuracy ±1%
Analog Input Current	0(4) to 20 mA; R_i – 250Ω differential
Digital Inputs (6)	Positive or negative logic; 18 to 24V DC
Auxiliary Voltage	+24V ±15%, max. 250 mA
Output Reference Voltage	+10V +3%, max. load 10 mA

Table A-1: SVX9000/SPX9000 Drive Specifications (Continued)

Description	Specification
Control Connections (Continued)	
Analog Output	0(4) to 20 mA; R_L max. 500Ω; Resolution 10 bit; Accuracy ±2% or 0 to 10 V, R_L 1 kΩ, select with jumper
Digital Outputs	Open collector output, 50 mA/48V
Relay Outputs	3 programmable change-over relay outputs Switching capacity: 24V DC / 8A, 250V AC / 8A, 125V DC / 0.4A Minimum switching load: 5V/10 mA Continuous capacity: < 2 A_{rms}
Protections	
Overcurrent Protection	Yes
Undervoltage Protection	Yes
Ground (Earth) Fault	In case of a ground fault in the motor or motor cables, only the SVX9000/SPX9000 is protected
Input Phase Supervision	Trips if any of the input phases are missing
Motor Phase Supervision	Trips if any of the output phases are missing
Overtemperature Protection	Yes
Motor Overload Protection	Yes
Motor Stall Protection	Yes
Motor Underload Protection	Yes
Short Circuit Protection of the +24V and +10V Reference Voltages	Yes

Power Ratings

Table A-2: Output Power Ratings — 230V I_H

Catalog Number ①②	Frame Size	Three-Phase Input	
		Horsepower	Current
SVXF07Ax-2A_1	FR4	3/4	3.7
SVX001Ax-2A_1		1	4.8
SVXF15Ax-2A_1		1-1/2	6.6
SVX002Ax-2A_1		2	7.8
SVX003Ax-2A_1		3	11.0
SVX005Ax-2A_1	FR5	5	17.5
SVX007Ax-2A_1		7-1/2	25.
SVX010Ax-2A_1	FR6	10	31.
SVX015Ax-2A_1		15	48.
SVX020Ax-2A_1	FR7	20	61.
SVX025Ax-2A_1		25	75.
SVX030Ax-2A_1		30	88.

① Insert a **1** for NEMA Type 1 or a **2** for NEMA Type 12 in place of the **x** in the Catalog Number.

② For SPX drives change SVX prefix to SPX.

Table A-3: Output Power Ratings — 480V I_H

Catalog Number ①②	Frame Size	Three-Phase Input	
		Horsepower	Current
SVX001x-4A_1	FR4	1	2.2
SVXF15x-4A_1		1-1/2	3.3
SVX002x-4A_1		2	4.3
SVX003x-4A_1		3	5.6
SVX005x-4A_1		5	7.6
SVX007x-4A_1	FR5	7-1/2	12.
SVX010x-4A_1		10	16.
SVX015x-4A_1		15	23.
SVX020x-4A_1	FR6	20	31.
SVX025x-4A_1		25	38.
SVX030x-4A_1		30	46.
SVX040x-4A_1	FR7	40	61.
SVX050x-4A_1		50	72.
SVX060x-4A_1		60	87.
SVX075x-4A_1	FR8	75	105.
SVX100x-4A_1		100	140.
SVX125x-4A_1		125	170.
SVX150x-4A_1	FR9	150	205.
SVX200x-4A_1		200	245.

① Insert a **1** for NEMA Type 1 or a **2** for NEMA Type 12 in place of the **x** in the Catalog Number.
② For SPX drives change SVX prefix to SPX.

Table A-4: Output Power Ratings — 480V SPX FR10 – FR14

Catalog Number	Frame Size ③	hp (I_H)	Current (I_H)	hp (I_L)	Current (I_L)
SPX250A0-4A2N1	FR10	250	330	300	385
SPX300A0-4A2N1		300	385	—	460
SPX350A0-4A2N1		350	460	400	520
SPX400A0-4A2N1	FR11	400	520	500	590
SPX500A0-4A2N1		500	590	—	650
SPX550A0-4A2N1		—	650	600	730
SPX600A0-4A2N1	FR12	600	730	—	820
SPX650A0-4A2N1		—	820	700	920
SPX700A0-4A2N1		700	920	800	1030
SPX800A0-4A2N1	FR13	800	1030	900	1150
SPX900A0-4A2N1		900	1150	1000	1300
SPXH10A0-4A2N1		1000	1300	1200	1450
SPXH12A0-4A2N1	FR14	1200	1600	1500	1770
SPXH16A0-4A2N1		1600	1940	1800	2150
SPXH19A0-4A2N1		1900	2300	2200	2700

③ FR10 – FR14 includes 3% line reactor, but it is not integral to chassis.

Table A-5: Output Power Ratings — 575V I_H

Catalog Number ①	Frame Size	Three-Phase Input	
		Horsepower	Current
SVX002A1-5A4N1	FR6	2	3.33
SVX003A1-5A4N1		3	4.5
SVX004A1-5A4N1		—	5.5
SVX005A1-5A4N1		5	7.5
SVX007A1-5A4N1		7-1/2	10.
SVX010A1-5A4N1		10	13.5
SVX015A1-5A4N1		15	18.
SVX020A1-5A4N1		20	22.
SVX025A1-5A4N1		25	27.
SVX030A1-5A4N1	FR7	30	34.
SVX040A1-5A4N1		40	41.
SVX050A1-5A4N1	FR8	50	52.
SVX060A1-5A4N1		60	62.
SVX075A1-5A4N1		75	80.
SVX100A1-5A4N1	FR9	100	100.
SVX125A1-5A4N1		125	125.
SVX150A1-5A4N1		150	144.
SVX175A1-5A4N1		—	170.

① For SPX drives change SVX prefix to SPX.

Table A-6: Output Power Ratings — 575V SPX FR10 – FR14

Catalog Number	Frame Size ②	hp (I_H)	Current (I_H)	hp (I_L)	Current (I_L)
SPX200A0-5A2N1	FR10	200	208	250	261
SPX250A0-5A2N1		250	261	300	325
SPX300A0-5A2N1		300	325	400	385
SPX400A0-5A2N1	FR11	400	385	450	460
SPX450A0-5A2N1		450	460	500	502
SPX500A0-5A2N1		500	502	—	590
SPX550A0-5A2N1	FR12	—	590	600	650
SPX600A0-5A2N1		600	650	700	750
SPX700A0-5A2N1		700	750	800	820
SPX800A0-5A2N1	FR13	800	820	900	920
SPX900A0-5A2N1		900	920	1000	1030
SPXH10A0-5A2N1		1000	1030	1250	1180
SPXH13A0-5A2N1	FR14	1350	1300	1500	1500
SPXH15A0-5A2N1		1500	1500	2000	1900
SPXH20A0-5A2N1		2000	1900	2300	2250

② FR10 – FR14 includes a 3% line reactor but it is not integral to chassis.

Power Loss and Switching Frequency

In some situations it may be desirable to change the switching frequency of the SVX9000/SPX9000 for some reason (typically e.g. to reduce the motor noise). Raising the switching frequency above the factory default level increases the drive power loss and increases the cooling requirements, **Figures A-2** through **A-7** illustrate the power loss increase for the different SVX9000/SPX9000 models. When operating above the default switching frequency the SVX9000/SPX9000 output current rating should be derated by the ratio of the increased power loss to the nominal power loss.

Example:

The user of a 30 hp I_H, 61A, 480V SVX9000/SPX9000 wishes to increase the switching frequency from the factory default value of 10 kHz to 15 kHz to reduce motor noise. From **Figure A-4** the loss at the factory default switching frequency of 10 kHz is 1240 watts. The loss at 15 kHz from **Figure A-4** is 1340 watts.

$$\text{Re}\ rate = 61 \times \frac{1240}{1340} = 56A$$

Thus at the increased switching frequency the maximum load allowed is reduced to 56A to avoid overheating the SVX9000/SPX9000.

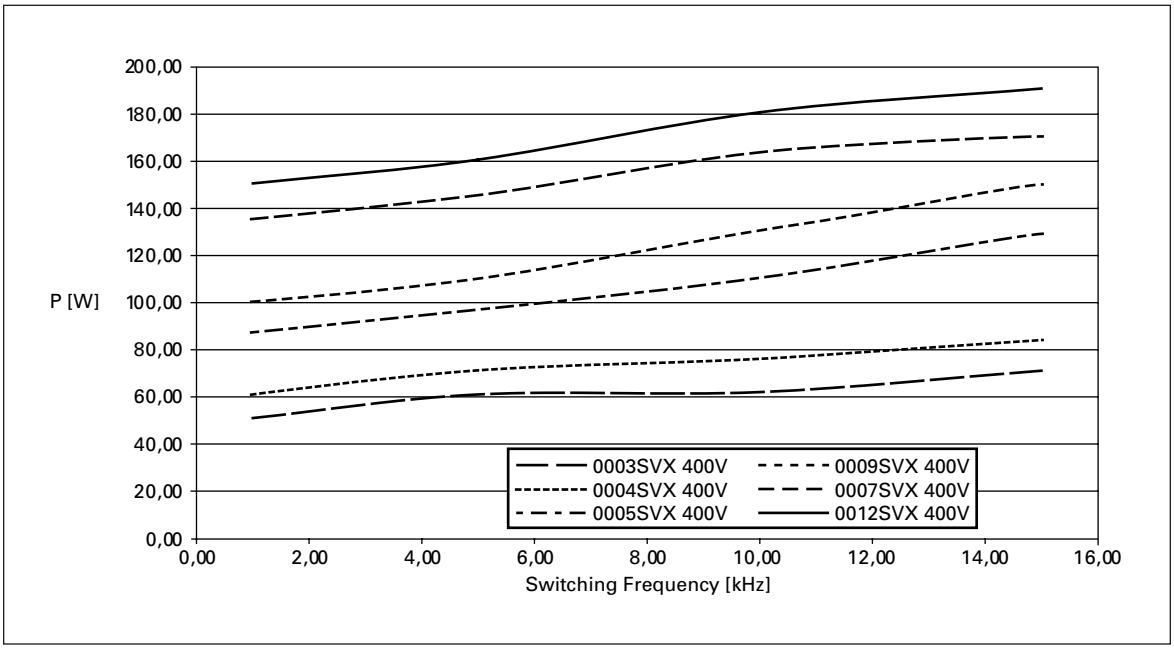

Figure A-2: Power Loss as Function of Switching Frequency — 3/4 – 3 hp 230V, 1 – 5 hp 480V

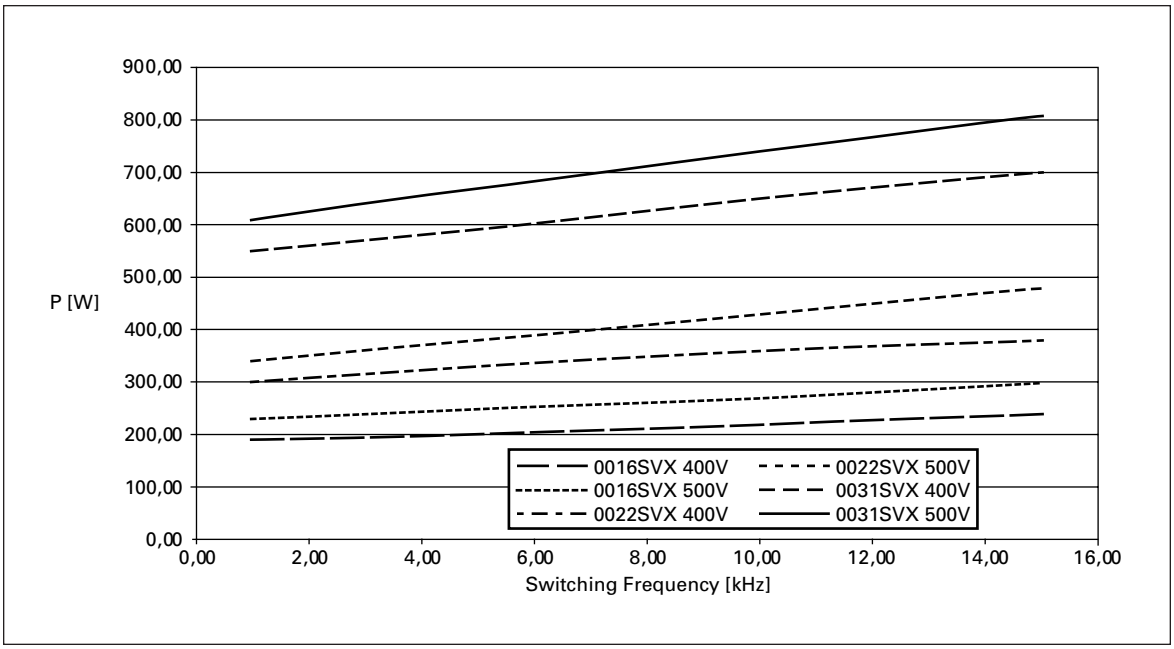

Figure A-3: Power Loss as Function of Switching Frequency — 5 – 7-1/2 hp 230V, 7-1/2 – 15 hp 480V

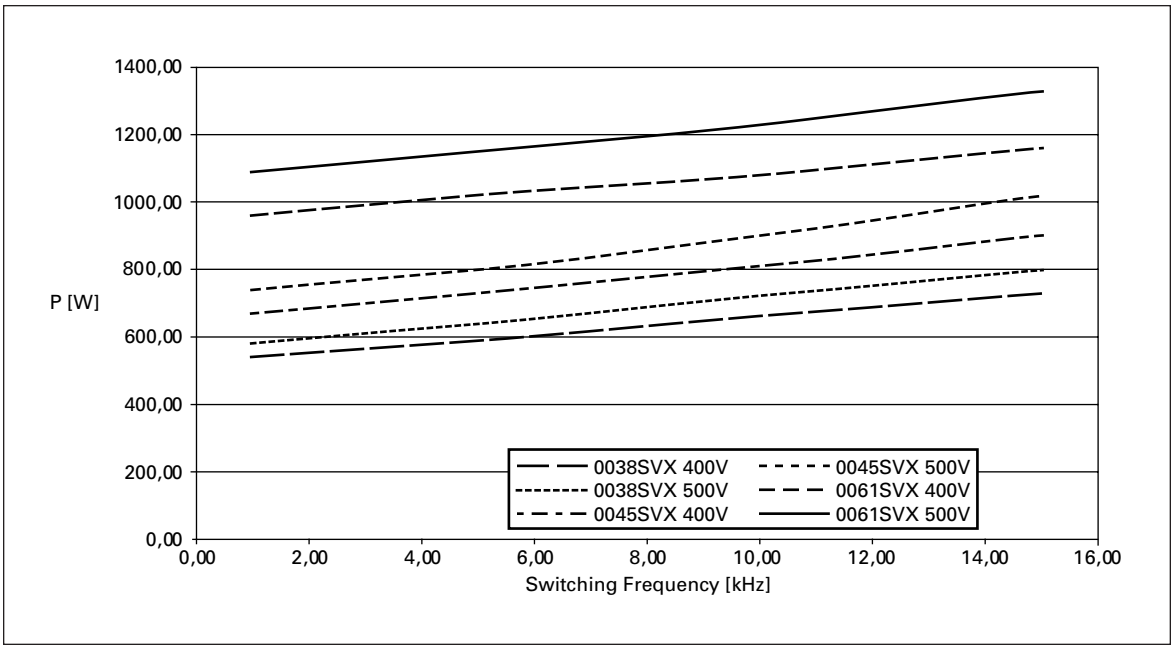

Figure A-4: Power Loss as Function of Switching Frequency — 10 – 15 hp 230V, 20 – 30 hp 480V

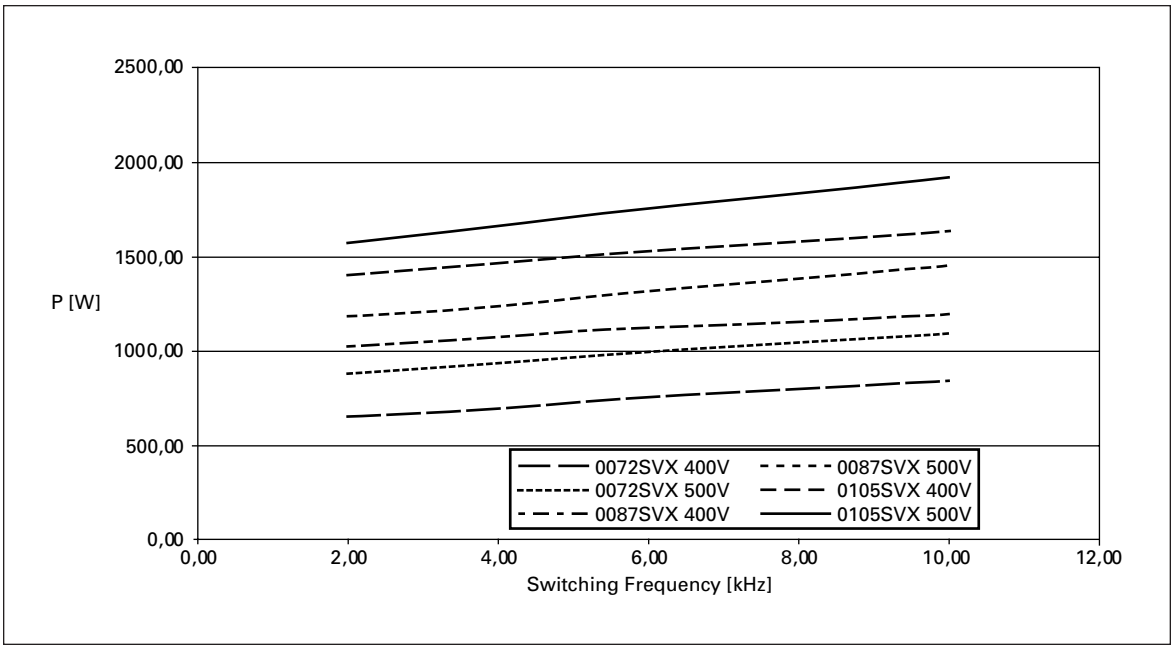

Figure A-5: Power Loss as Function of Switching Frequency — 20 – 30 hp 230V, 40 – 60 hp 480V

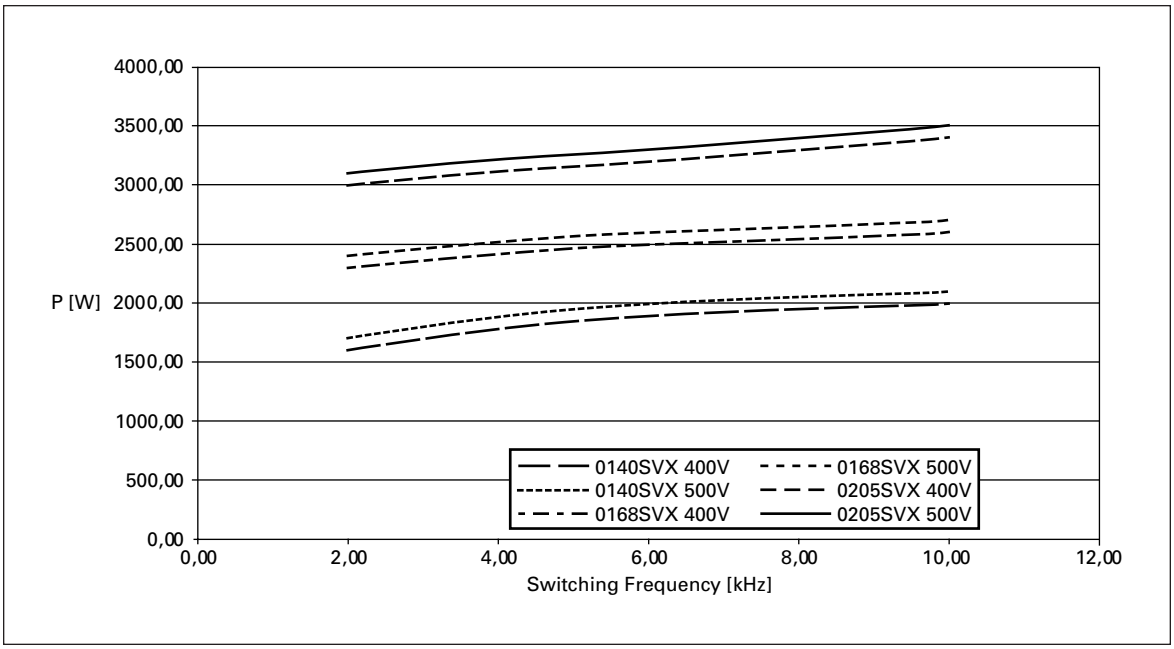

Figure A-6: Power Loss as Function of Switching Frequency — 75 – 125 hp 480V

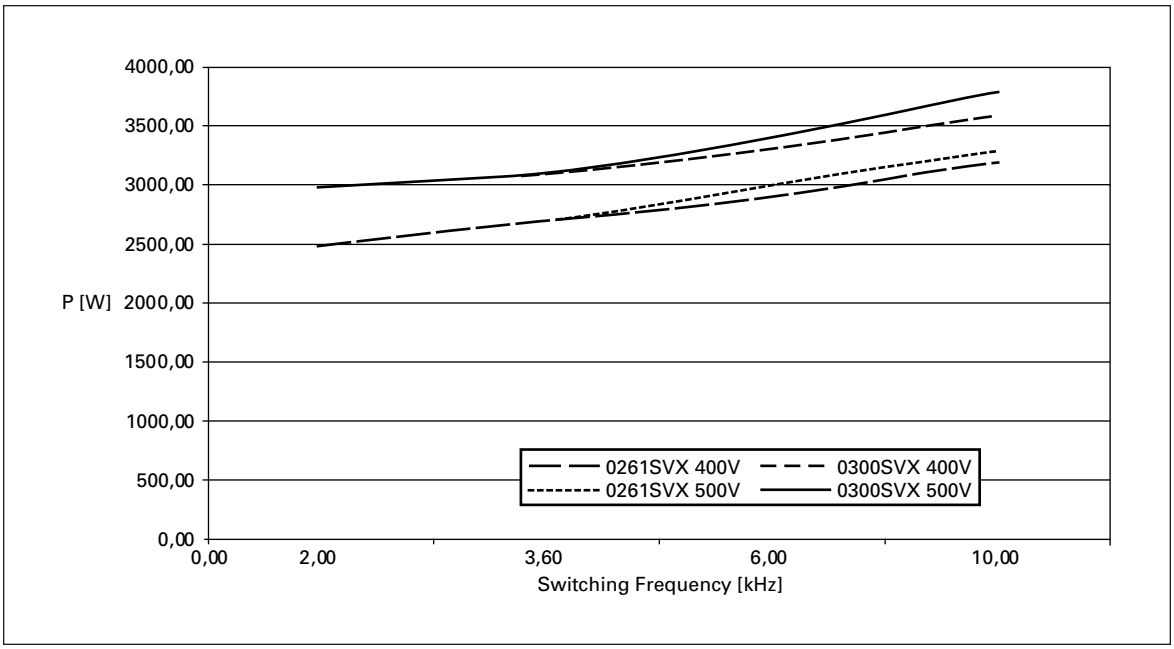

Figure A-7: Power Loss as Function of Switching Frequency — 150 – 200 hp 480V

October 2007

Dimensions

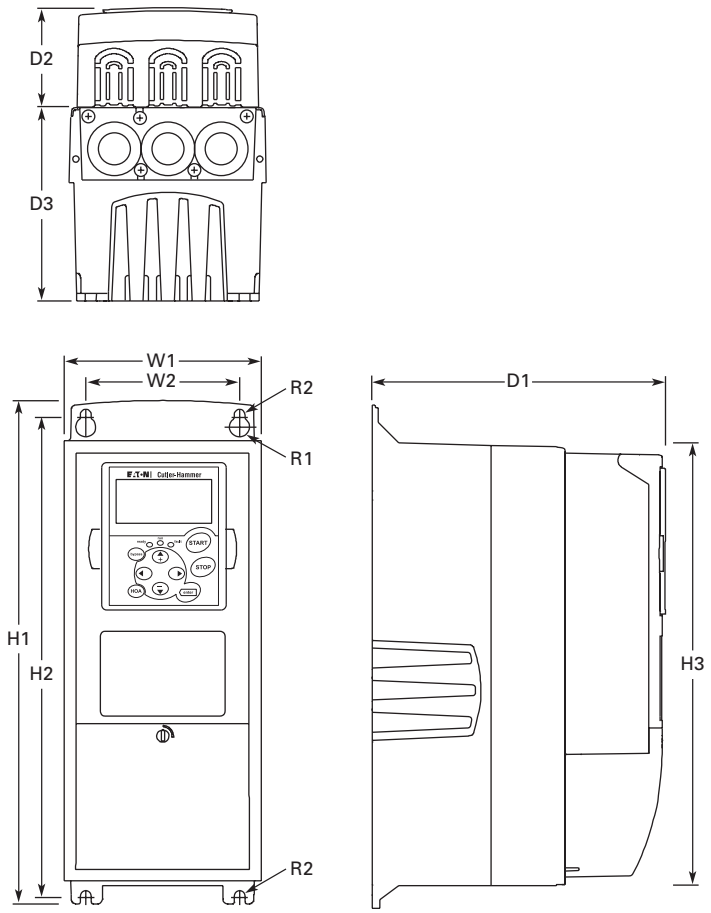

Figure A-8: NEMA Type 1 Enclosure Dimensions

Table A-7: NEMA Type 1/Type 12 Enclosure Dimensions

Frame Size	Voltage	hp (I_H)	Approximate Dimensions in Inches (mm)										Weight Lbs. (kg)
			H1	H2	H3	D1	D2	D3	W1	W2	R1 dia.	R2 dia.	
FR4	230V	3/4 – 3	12.9 (327)	12.3 (312)	11.5 (292)	7.5 (190)	2.5 (64)	5.0 (126)	5.0 (128)	3.9 (100)	0.5 (13)	0.3 (7)	11 (5)
	480V	1 – 5											
FR5	230V	5 – 7-1/2	16.5 (419)	16.0 (406)	15.3 (389)	8.4 (214)	2.7 (68)	5.8 (148)	5.6 (143)	3.9 (100)	0.5 (13)	0.3 (7)	17.9 (8.1)
	480V	7-1/2 – 15											
FR6	230V	10 – 15	22.0 (558)	21.3 (541)	20.4 (519)	9.3 (237)	2.7 (68)	6.7 (171)	7.7 (195)	5.8 (148)	0.7 (18)	0.4 (9)	40.8 (18.5)
	480V	20 – 30											
	575V	2 – 25											
FR7	230V	20 – 30	24.8 (630)	24.2 (614)	23.3 (591)	10.1 (257)	2.7 (68)	7.5 (189)	9.3 (237)	7.5 (190)	0.7 (18)	0.4 (9)	77.2 (35)
	480V	40 – 60											
	575V	30 – 40											
FR8	480V	75 – 125	29.7 (755)	28.8 (732)	28.4 (721)	12.3 (312)	1.3 (34)	11.0 (279)	11.2 (285)	10.0 (255)	0.7 (18)	0.4 (9)	127.8 (58)
	575V	50 – 75											
FR9	480V	150 – 200	45.3 (1150)	44.1 (1120)	45.3 (1150)	14.3 (362)	5.4 (137)	8.8 (224)	18.9 (480)	15.7 (400)	0.7 (18)	0.4 (9)	321.9 (146)
	575V	100 – 150											

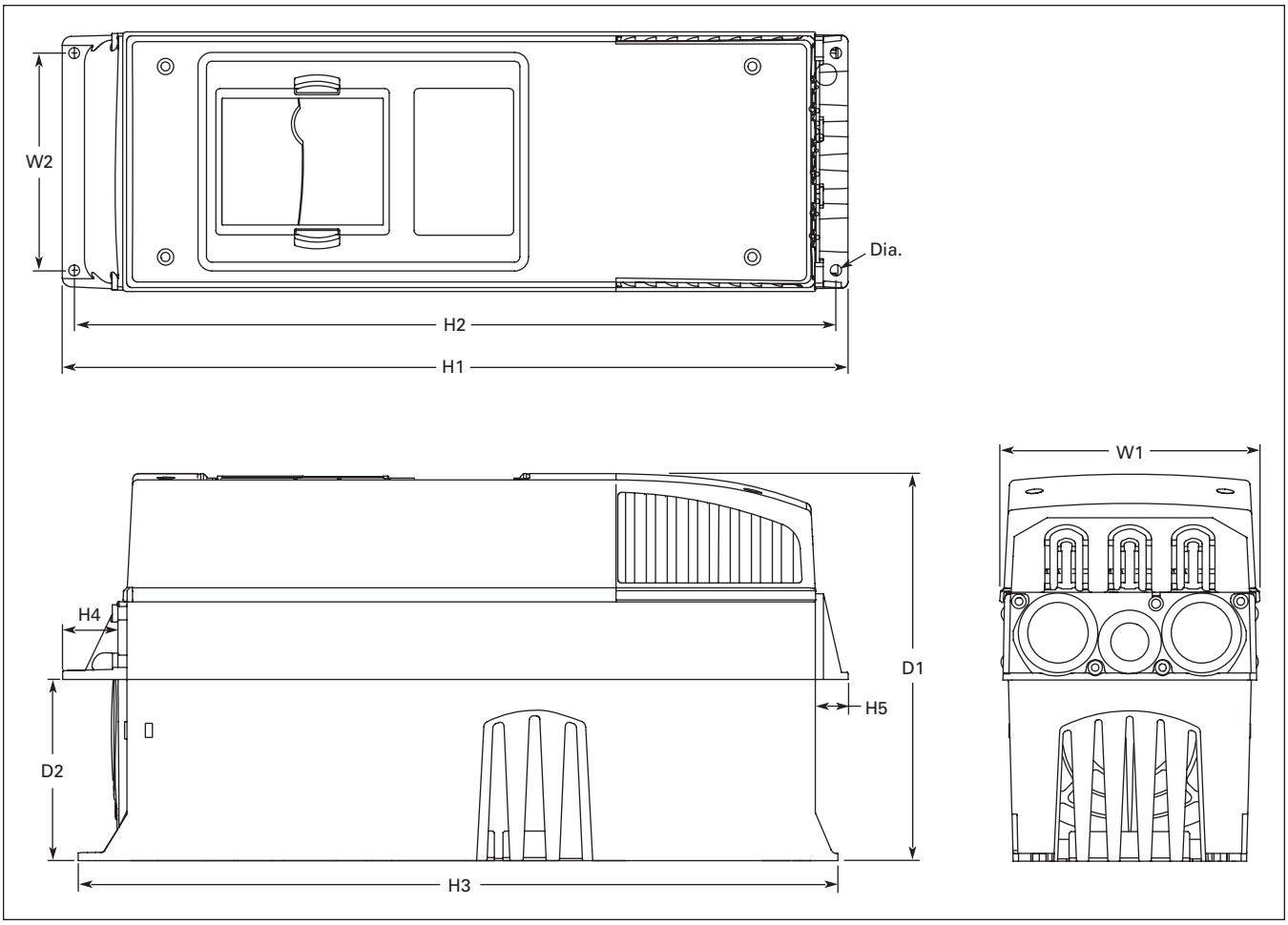

Figure A-9: NEMA Type 1 and 12 with Flange Kit, FR4, FR5 and FR6 Enclosure Dimensions

Table A-8: FR4, FR5 and FR6 with Flange Kit Enclosure Dimensions

Frame Size	Voltage	Approximate Dimensions in Inches (mm)									
		W1	W2	H1	H2	H3	H4	H5	D1	D2	Dia.
FR4	230V	5.0 (128)	4.45 (113)	13.27 (337)	12.8 (325)	12.9 (327)	1.18 (30)	.87 (22)	7.5 (190)	3.0 (77)	.27 (7)
	480V										
FR5	230V	5.67 (144)	4.7 (120)	17.0 (434)	16.5 (420)	16.5 (419)	1.4 (36)	.7 (18)	8.42 (214)	3.93 (100)	.27 (7)
	480V										
FR6	230V	7.67 (195)	6.7 (170)	22.0 (560)	21.6 (549)	21.9 (558)	1.18 (30)	.79 (20)	9.33 (237)	4.17 (106)	.25 (6.5)
	480V										
	575V										

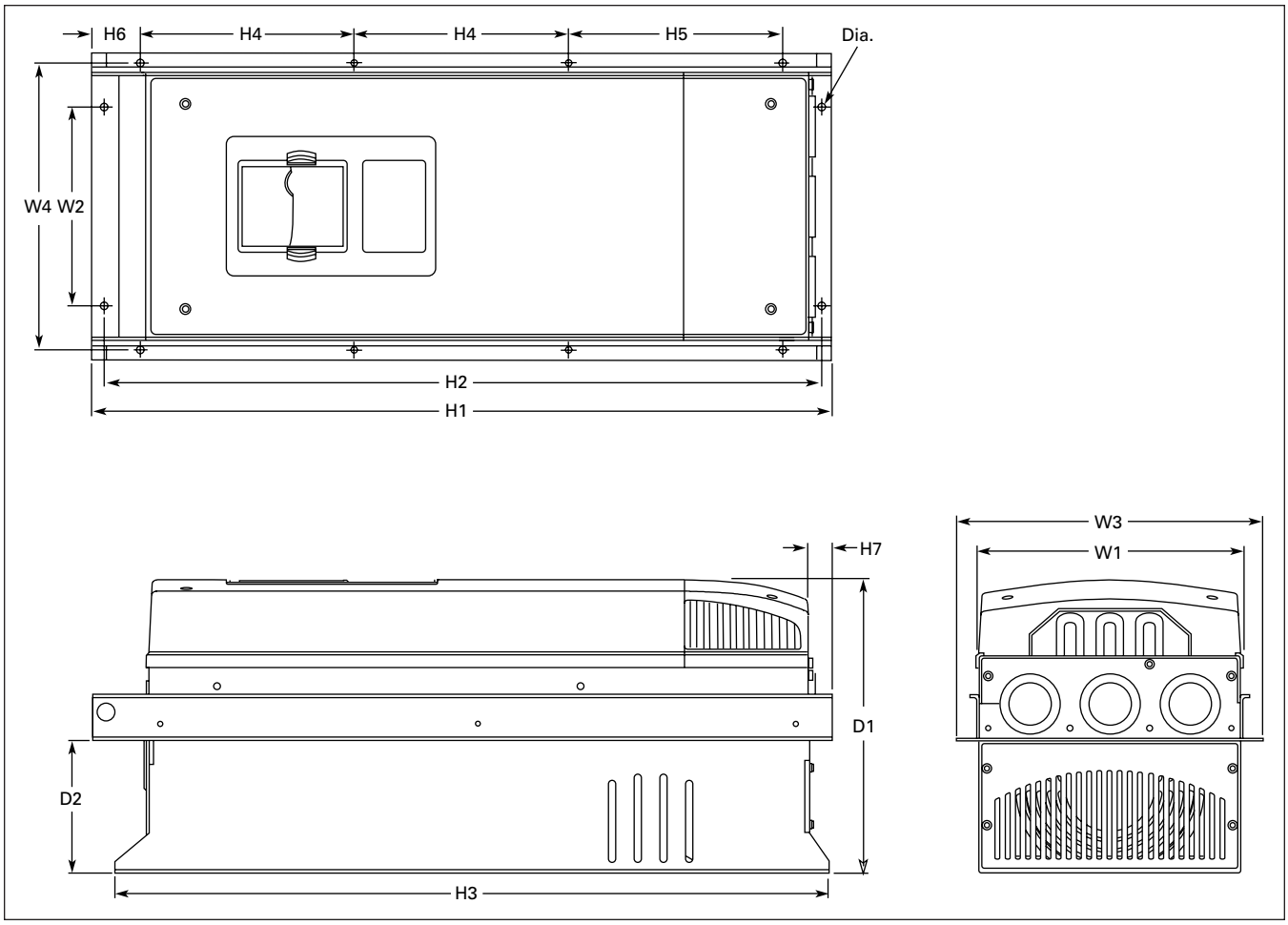

Figure A-10: NEMA Type 1 with Flange Kit, FR7 and FR8 Enclosure Dimensions

Table A-9: FR7 and FR8 with Flange Kit Enclosure Dimensions

Frame Size	Voltage	Approximate Dimensions in Inches (mm)													
		W1	W2	W3	W4	H1	H2	H3	H4	H5	H6	H7	D1	D2	Dia.
FR7	230V	9.33 (237)	6.8 (175)	10.62 (270)	10 (253)	25.6 (652)	24.8 (632)	24.8 (630)	7.42 (188.5)	7.42 (188.5)	.9 (23)	.78 (20)	10.1 (257)	4.6 (117)	.25 (5.5)
	480V														
	575V														
FR8	480V	11.22 (285)	—	13.97 (355)	13 (330)	32.75 (832)	—	29.33 (745)	10.15 (258)	10.43 (265)	1.7 (43)	2.24 (57)	11.3 (288)	4.33 (110)	.35 (9)
	575V														

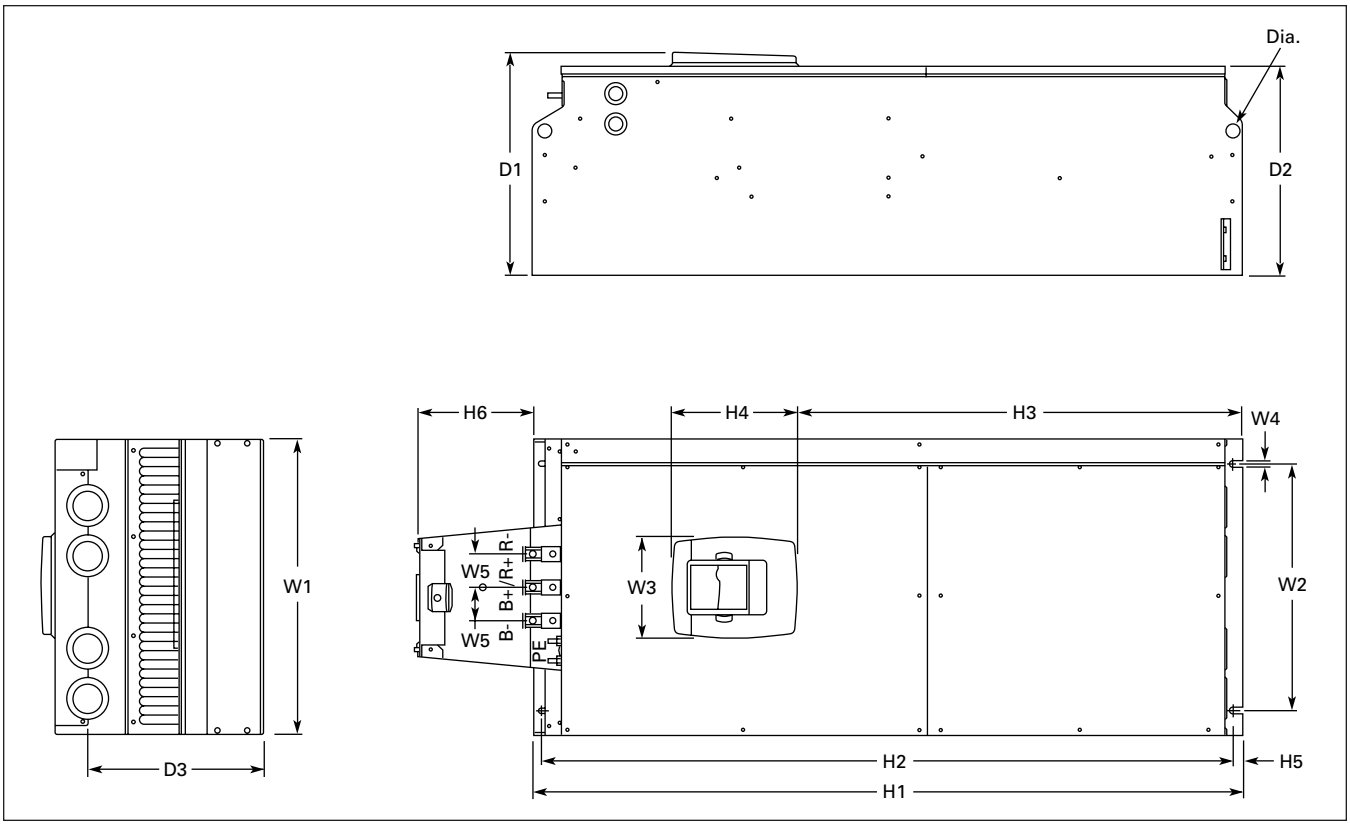

Figure A-11: FR9 Enclosure Dimensions

Table A-10: FR9 Enclosure Dimensions

Frame Size	Voltage	Approximate Dimensions in Inches (mm)														
		W1	W2	W3	W4	W5	H1	H2	H3	H4	H5	H6 ①	D1	D2	D3	Dia.
FR9	480V 575V	18.8 (480)	15.75 (400)	6.5 (165)	.35 (9)	2.12 (54)	45.27 (1150)	44 (1120)	28.3 (721)	8 (205)	.62 (16)	7.4 (188)	14.25 (362)	13.38 (340)	11.22 (285)	.82 (21)

① Brake resistor terminal box (H6) included when brake chopper ordered.

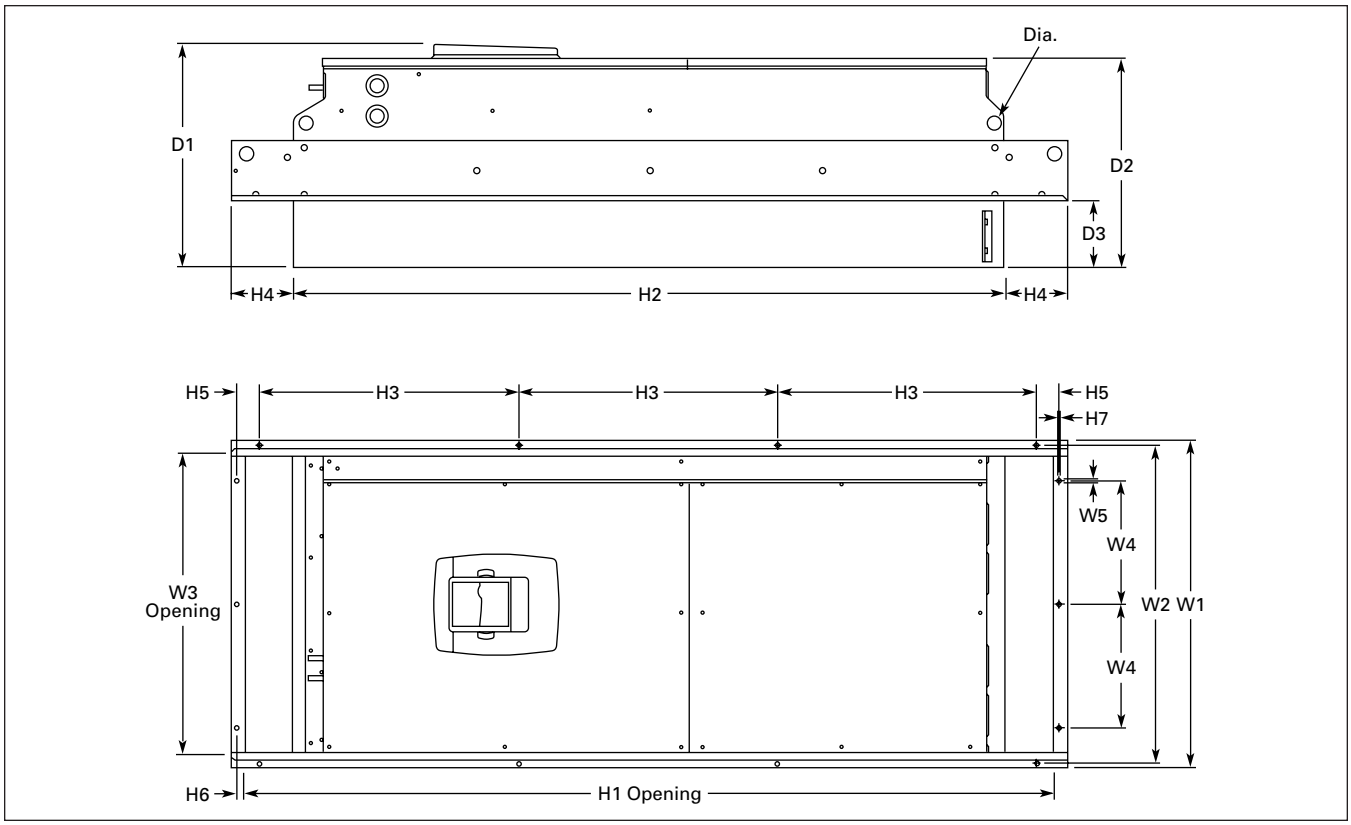

Figure A-12: FR9 with Flange Kit Enclosure Dimensions

Table A-11: FR9 with Flange Kit Enclosure Dimensions

Frame Size	Voltage	Approximate Dimensions in Inches (mm)															
		W1	W2	W3	W4	W5	H1	H2	H3	H4	H5	H6	H7	D1	D2	D3	Dia.
FR9	480V 575V	20.9 (530)	20 (510)	19.1 (485)	7.9 (200)	.22 (5.5)	51.7 (1312)	45.3 (1150)	16.5 (420)	3.9 (100)	1.4 (35)	.35 (9)	.08 (2)	24.9 (362)	13.4 (340)	4.3 (109)	.8 (21)

Power Unit — SPX9000 FR10 – FR14

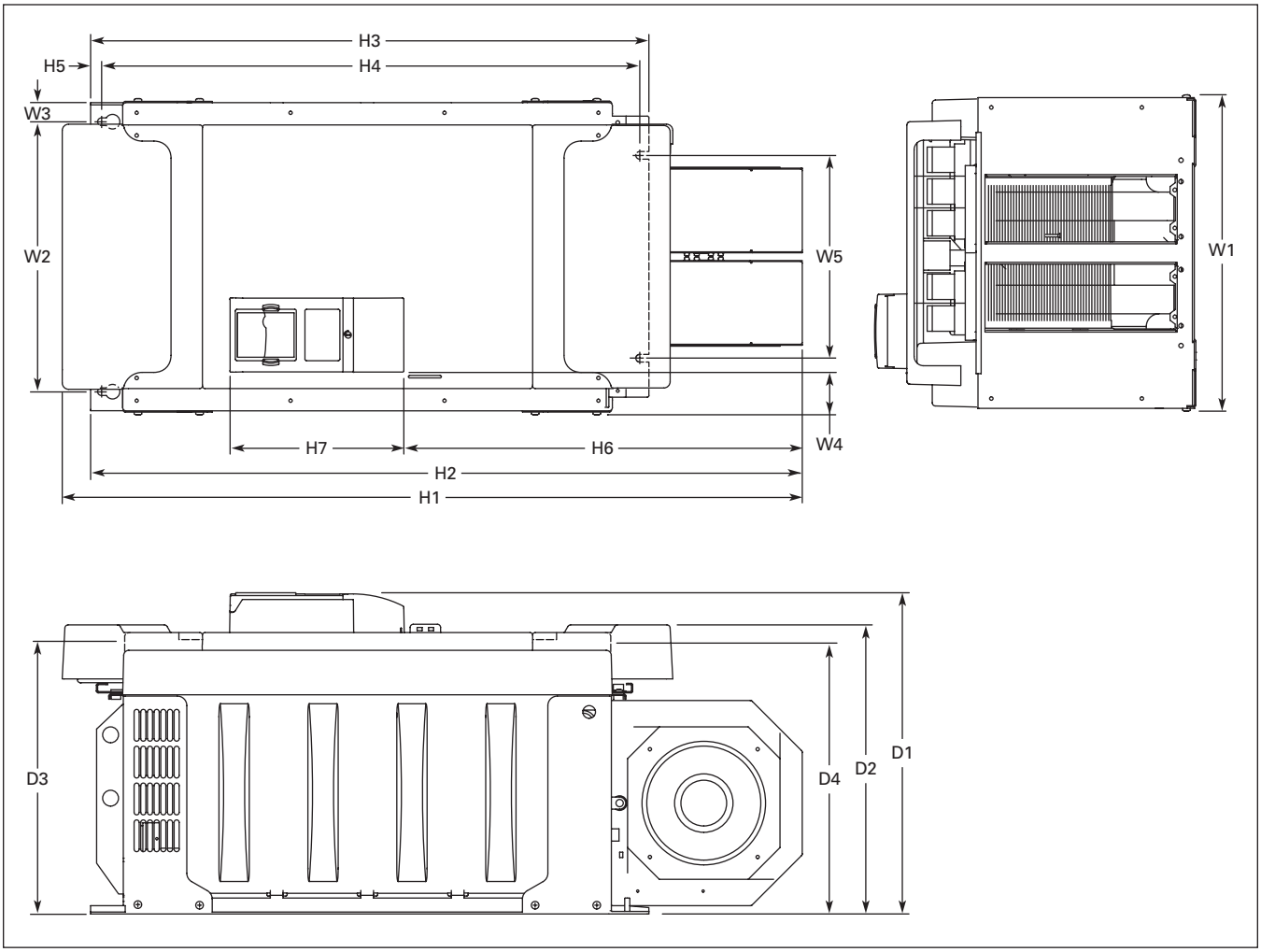

Figure A-13: SPX9000 Dimensions, FR10 Open Chassis

Table A-12: Dimensions for SPX9000, FR10 Open Chassis

Frame Size	Voltage	hp (I_H)	Approximate Dimensions in Inches (mm)								
			W1	W2	W3	W4	W5	H1	H2	H3	H4
FR10	480V	250 – 350	19.7 (500)	16.7 (425)	1.2 (30)	2.6 (67)	12.8 (325)	45.9 (1165)	44.1 (1121)	34.6 (879)	33.5 (850)
	575V	200 – 300									

Table A-12: Dimensions for SPX9000, FR10 Open Chassis (Continued)

Frame Size	Voltage	hp (I_H)	Approximate Dimensions in Inches (mm)							Weight Lbs. (kg)
			H5	H6	H7	D1	D2	D3	D4	
FR10	480V	250 – 350	.7 (17)	24.7 (627)	10.8 (275)	19.9 (506)	17.9 (455)	16.7 (423)	16.6 (421)	518 (235)
	575V	200 – 300								

Note: SPX9000 FR12 is built of two FR10 modules.

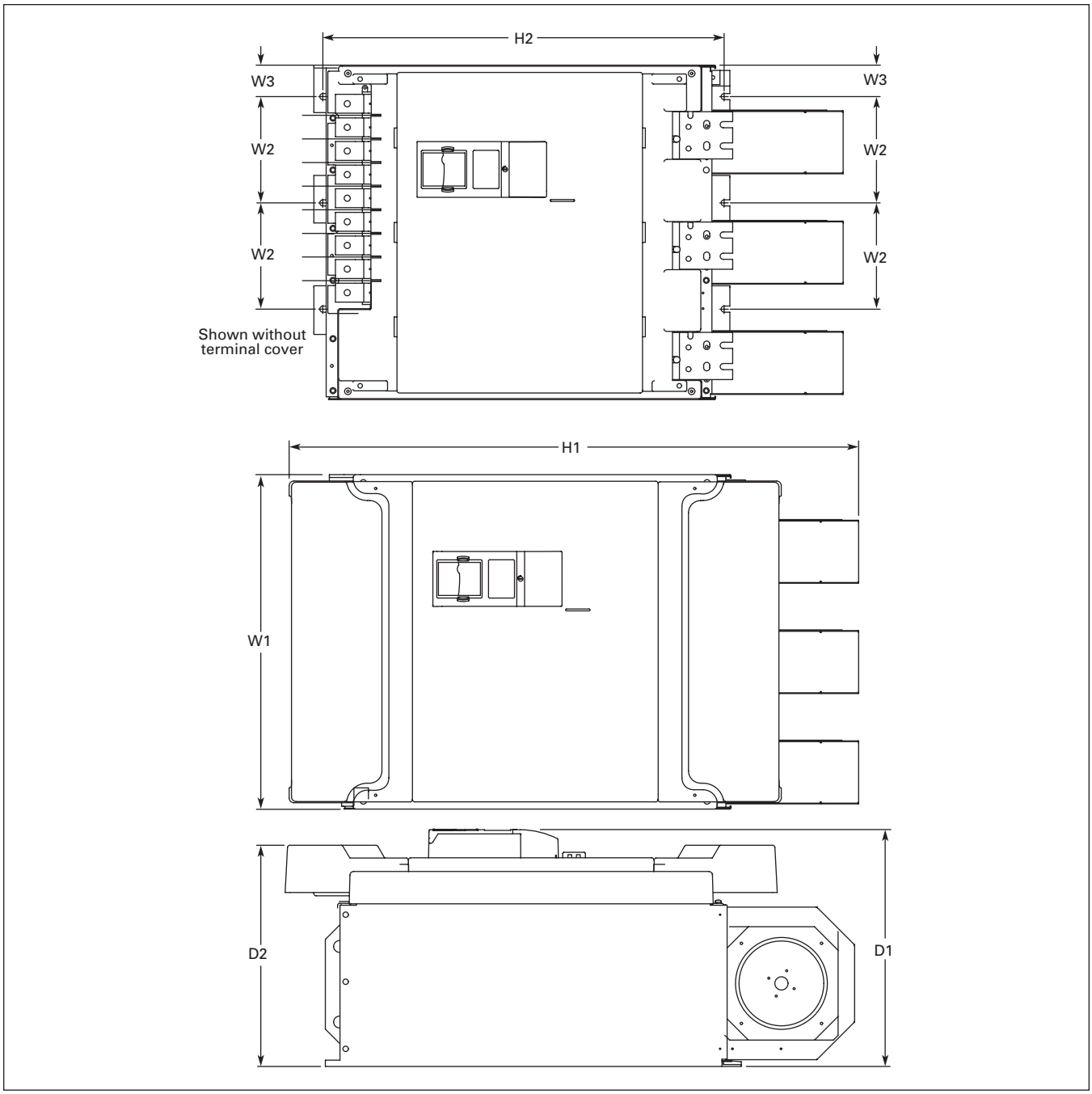

Figure A-14: SPX9000 Dimensions, FR11 Open Chassis

Table A-13: Dimensions for SPX9000, FR11 Open Chassis

Frame Size	Voltage	hp (I_H)	Approximate Dimensions in Inches (mm)							Weight Lbs. (kg)
			W1	W2	W3	H1	H2	D1	D2	
FR11	480V	400 – 550	27.9 (709)	8.6 (225)	2.6 (67)	45.5 (1155)	33.5 (850)	19.8 (503)	18.4 (468)	833 (378)
	575V	400 – 500								

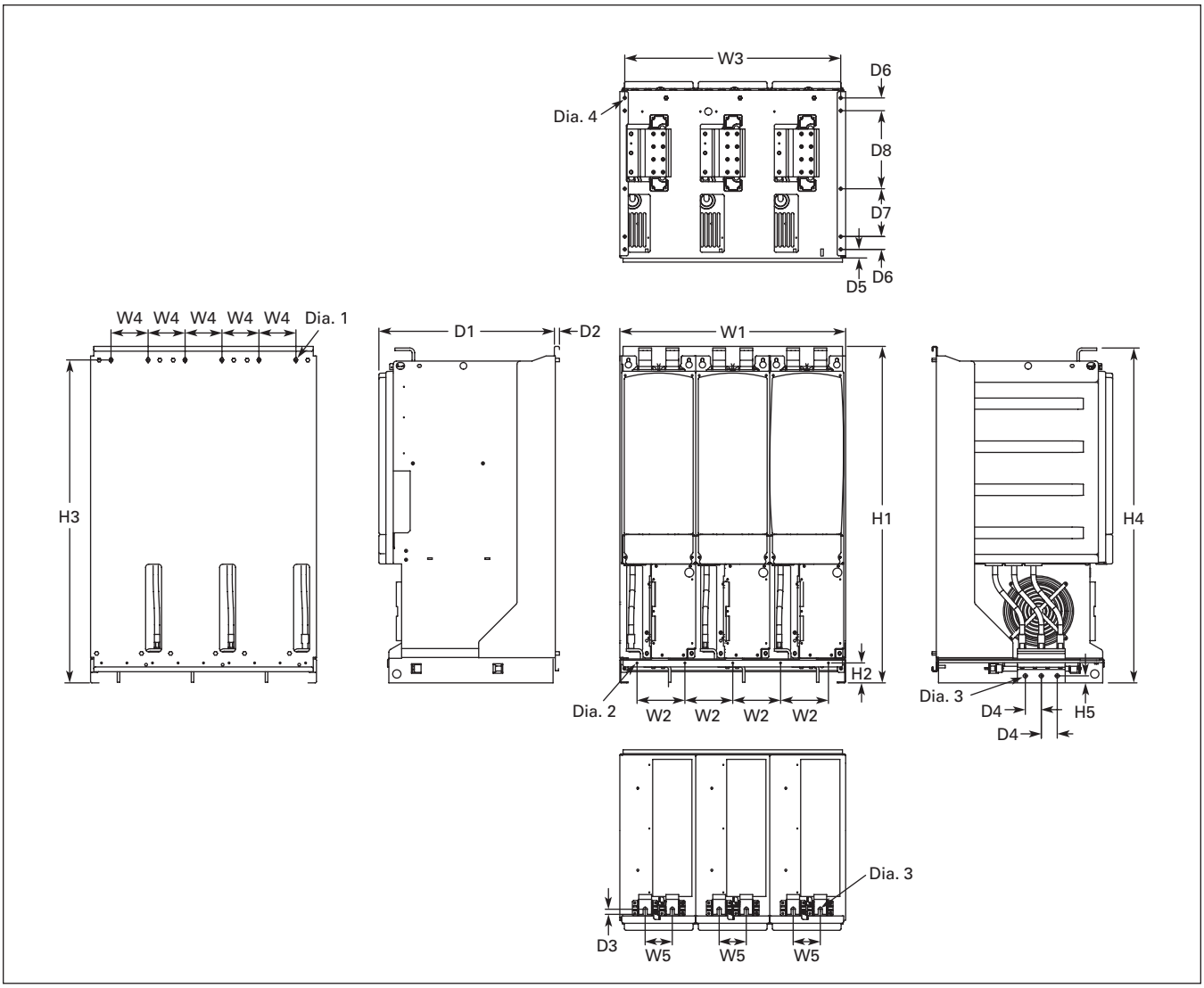

Figure A-15: SPX9000 Dimensions, FR13 Open Chassis Inverter

Table A-14: Dimensions for SPX9000, FR13 Open Chassis Inverter

Frame Size	Approximate Dimensions in Inches (mm)									
	W1	W2	W3	W4	W5	H1	H2	H3	H4	H5
FR13	27.87 (708)	5.91 (150)	26.65 (677)	4.57 (116)	3.35 (85)	41.54 (1055)	2.46 (62.5)	39.86 (1012.5)	41.34 (1050)	.79 (20)

Table A-14: Dimensions for SPX9000, FR13 Open Chassis Inverter (Continued)

Frame Size	Approximate Dimensions in Inches (mm)												Weight Lbs. (kg)
	D1	D2	D3	D4	D5	D6	D7	D8	Dia. 1	Dia. 2	Dia. 3	Dia. 4	
FR13	21.77 (553)	.51 (13)	.63 (16)	1.97 (50)	1.06 (27)	1.57 (40)	5.91 (150)	9.64 (244.8)	.35x.59 (9x15)	.18 (4.6)	.51 (13)	.37 (9.5)	683 (310)

Note: 9000X FR14 is built of two FR13 modules.

Note: FR13 is built from an inverter module and a converter module.

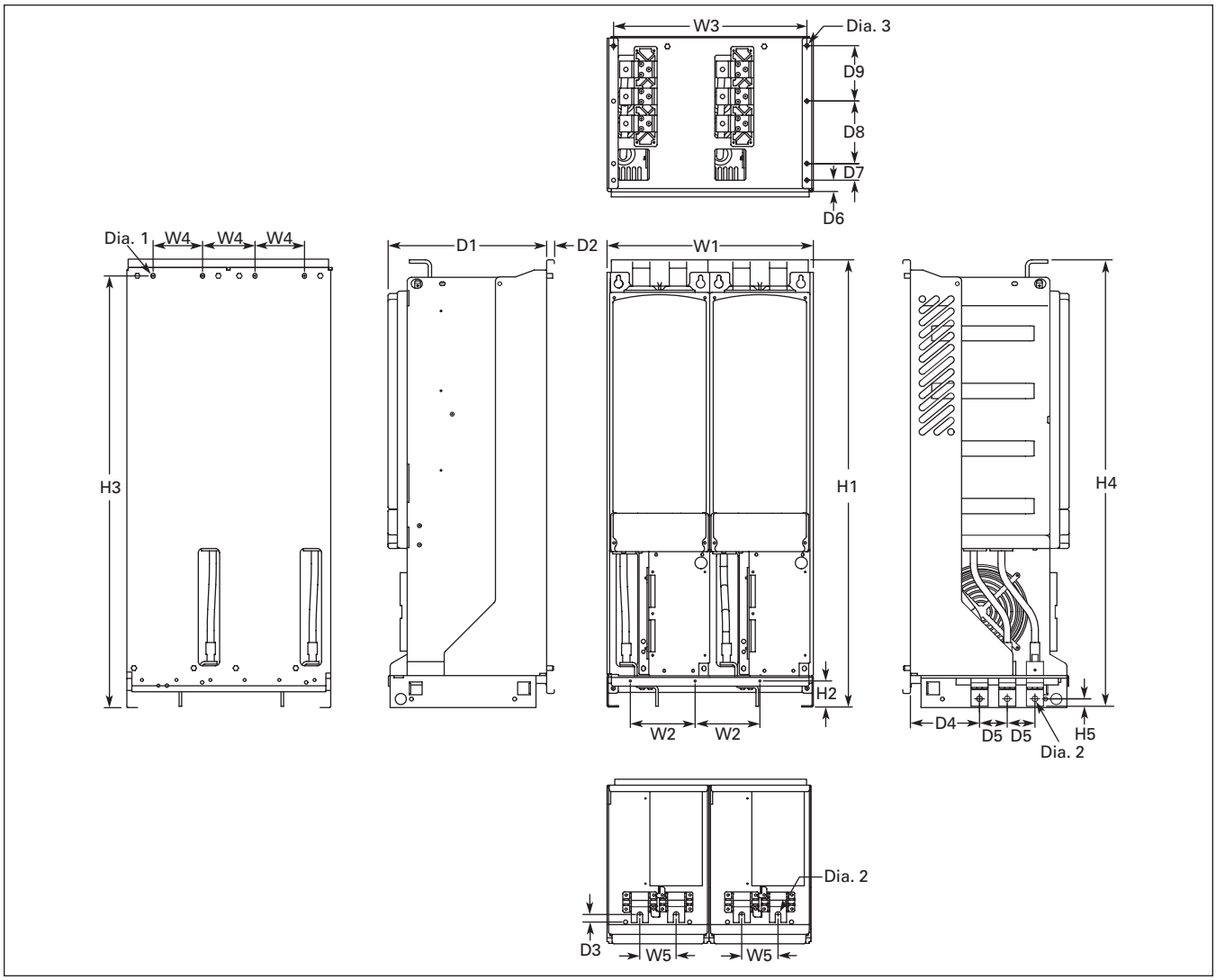

Figure A-16: SPX9000 Dimensions, FR13 Open Chassis Converter

Table A-15: FR13 — Number of Input Units

480V	hp	Input Modules	690V	hp	Input Modules
SPX800A0-4A2N1	800	2	**SPX800A0-5A2N1** **SPX900A0-5A2N1** **SPXH10A0-5A2N1**	800 900 1000	2 2 2

Table A-16: Dimensions for SPX9000, FR13 Open Chassis Converter

Frame Size	Approximate Dimensions in Inches (mm)											
	W1	W2	W3	W4	W5	H1	H2	H3	H4	H5	D1	D2
FR13	18.74 (476)	5.91 (150)	17.52 (445)	4.57 (116)	3.35 (85)	41.54 (1055)	2.46 (62.5)	39.86 (1012.5)	41.34 (1050)	.69 (17.5)	14.69 (373)	.51 (13)

Table A-16: Dimensions for SPX9000, FR13 Open Chassis Converter (Continued)

Frame Size	Approximate Dimensions in Inches (mm)										Weight Lbs. (kg)
	D3	D4	D5	D6	D7	D8	D9	Dia. 1	Dia. 2	Dia. 3	
FR13	.73 (18.5)	6.42 (163)	2.56 (65)	1.06 (27)	1.57 (40)	5.91 (150)	5.24 (133)	.35x.59 (9x15)	.51 (13)	.37 (9.5)	295 (134)

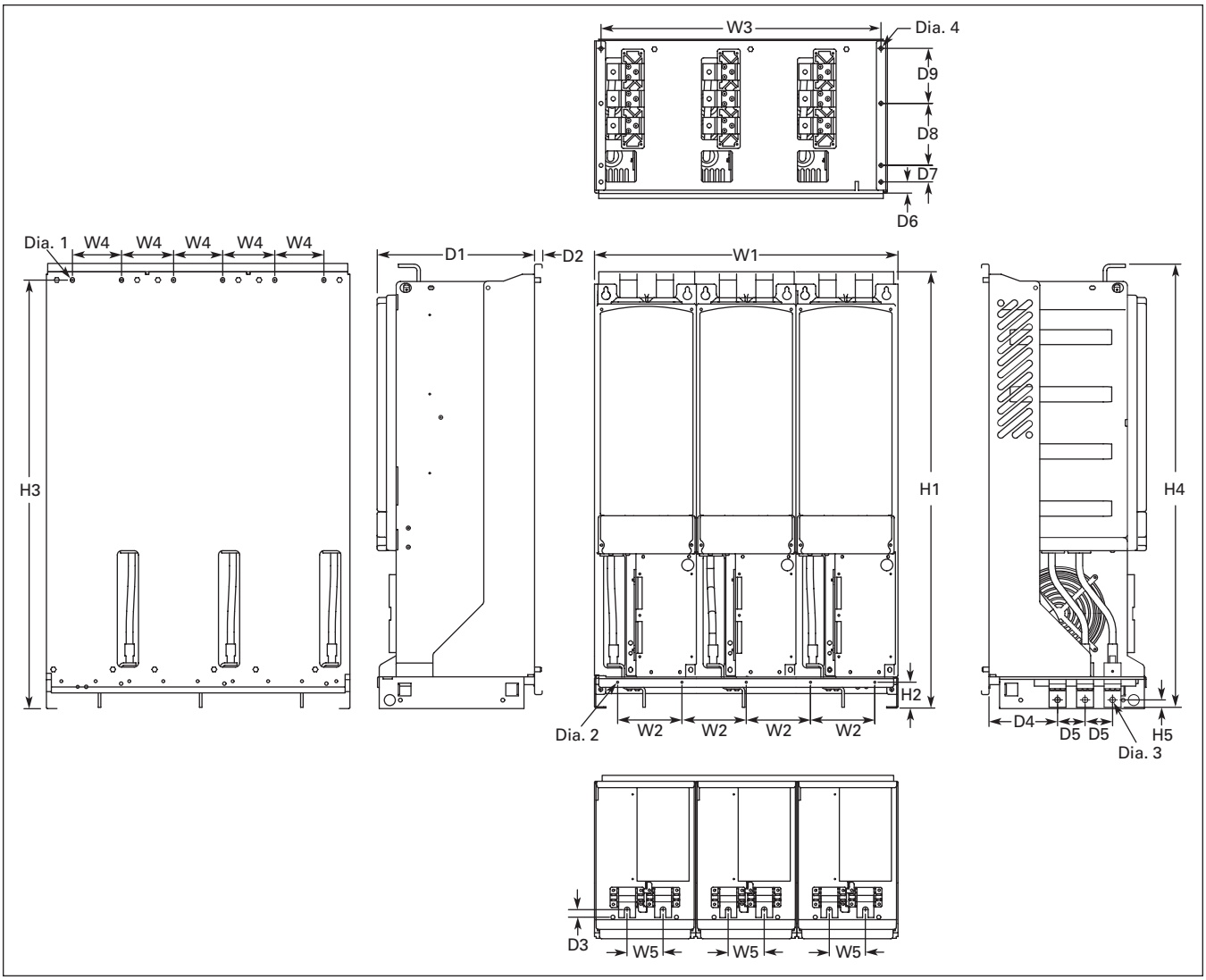

Figure A-17: SPX9000 Dimensions, FR13 Open Chassis Converter — 900/1000 hp 480V

Table A-17: FR13 — Number of Input Units

480V	hp	Input Modules
SPX900A0-4A2N1	900	3
SPXH10A0-4A2N1	1000	3

Table A-18: Dimensions for SPX9000, FR13 Open Chassis Converter — 900/1000 hp 480V

Frame Size	Approximate Dimensions in Inches (mm)												
	W1	W2	W3	W4	W5	H1	H2	H3	H4	H5	D1	D2	D3
FR13	27.87 (708)	5.91 (150)	26.65 (677)	4.57 (116)	3.35 (85)	41.54 (1055)	2.46 (62.5)	39.86 (1012.5)	41.34 (1050)	.69 (17.5)	14.69 (373)	.51 (13)	.73 (18.5)

Table A-18: Dimensions for SPX9000, FR13 Open Chassis Converter — 900/1000 hp 480V (Continued)

Frame Size	Approximate Dimensions in Inches (mm)										Weight Lbs. (kg)
	D4	D5	D6	D7	D8	D9	Dia. 1	Dia. 2	Dia. 3	Dia. 4	
FR13	6.42 (163)	2.56 (65)	1.06 (27)	1.57 (40)	5.91 (150)	5.24 (133)	.35x.59 (9x15)	.18 (4.6)	.51 (13)	.37 (9.5)	443 (201)

AC Choke — CHK0650

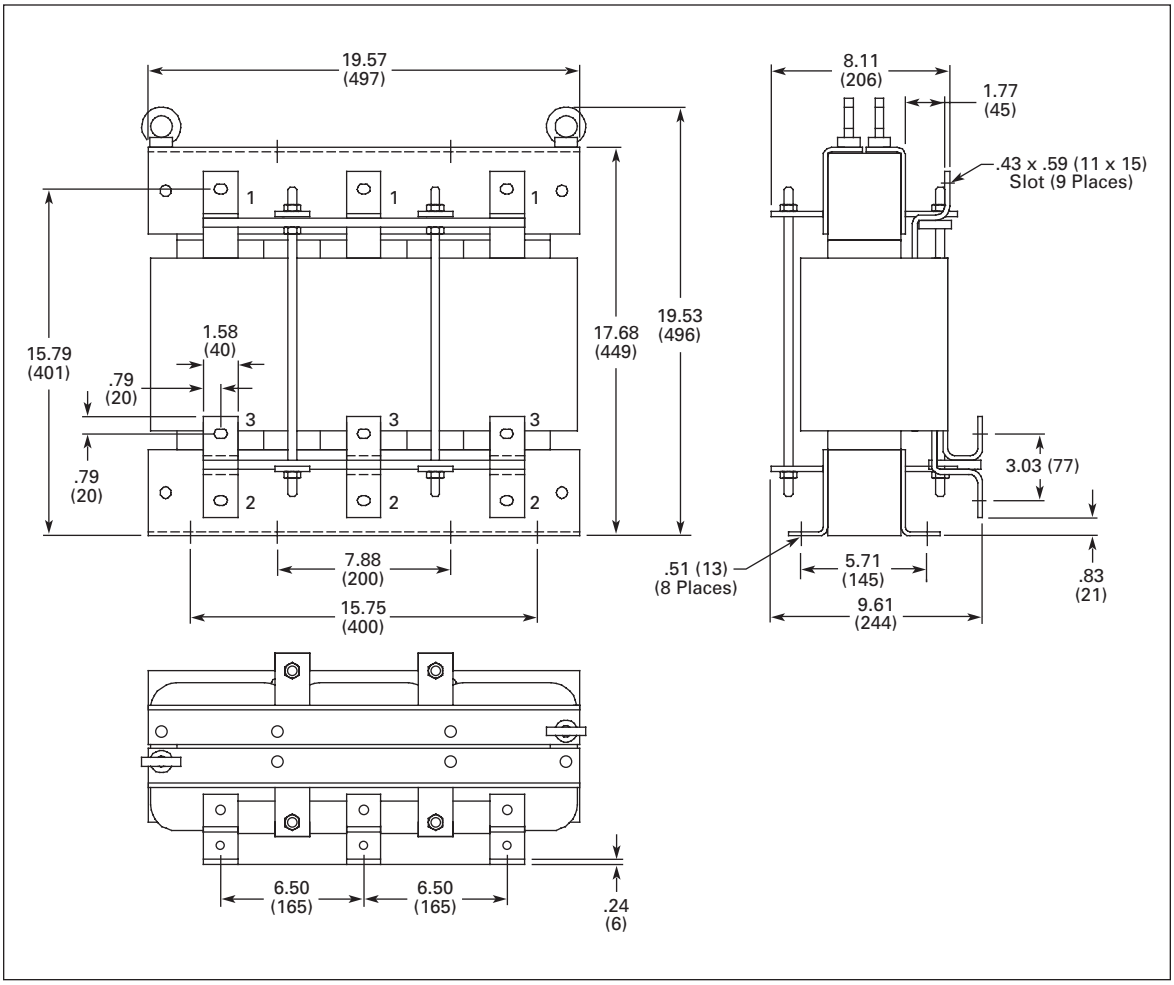

Figure A-18: AC Choke (CHK0650) Dimensions

Approximate Dimensions in Inches (mm)

AC Choke — CHK0520

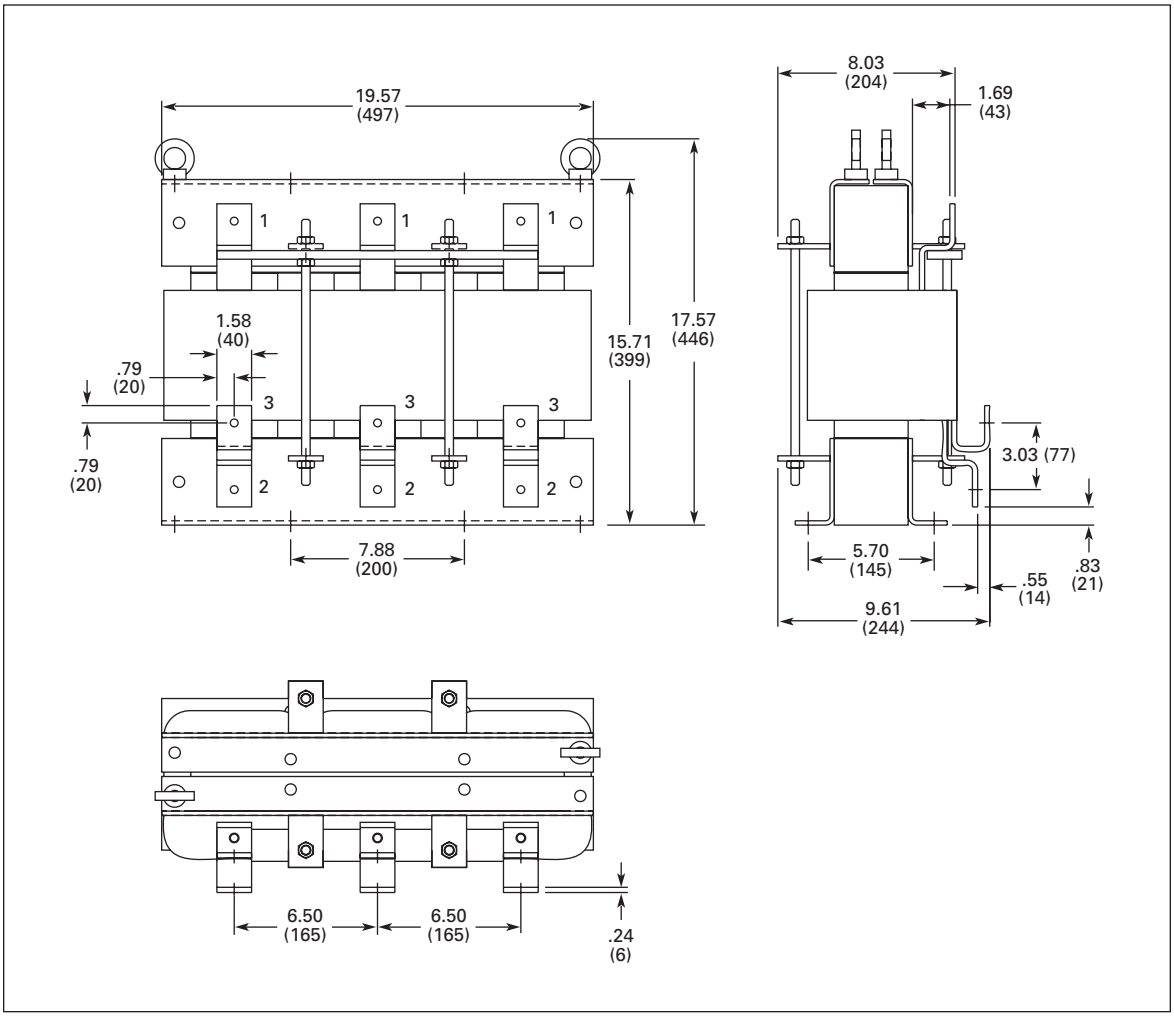

Figure A-19: AC Choke (CHK0520) Dimensions

Approximate Dimensions in Inches (mm)

AC Choke — CHK0400

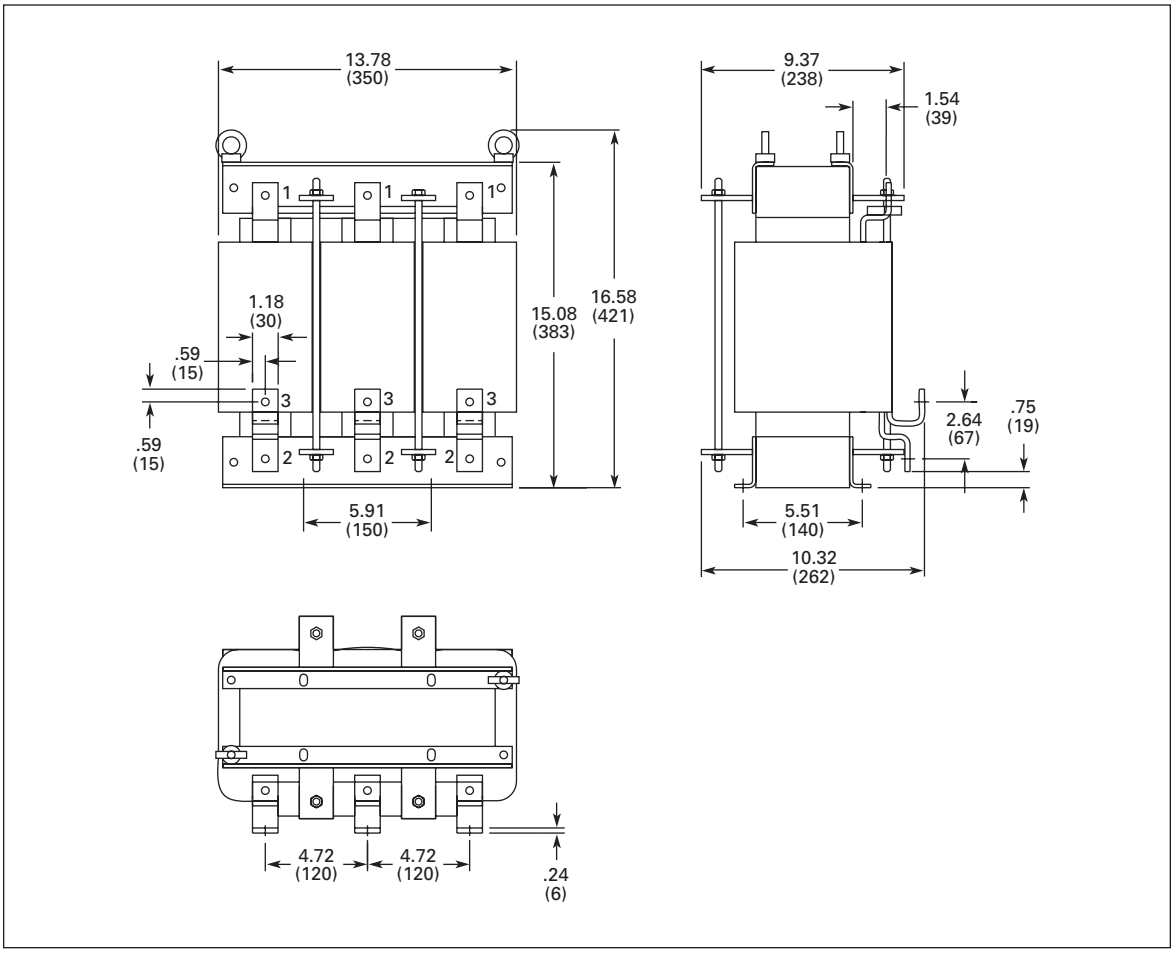

Figure A-20: AC Choke (CHK0400) Dimensions

Approximate Dimensions in Inches (mm)

AC Choke — CHK0261

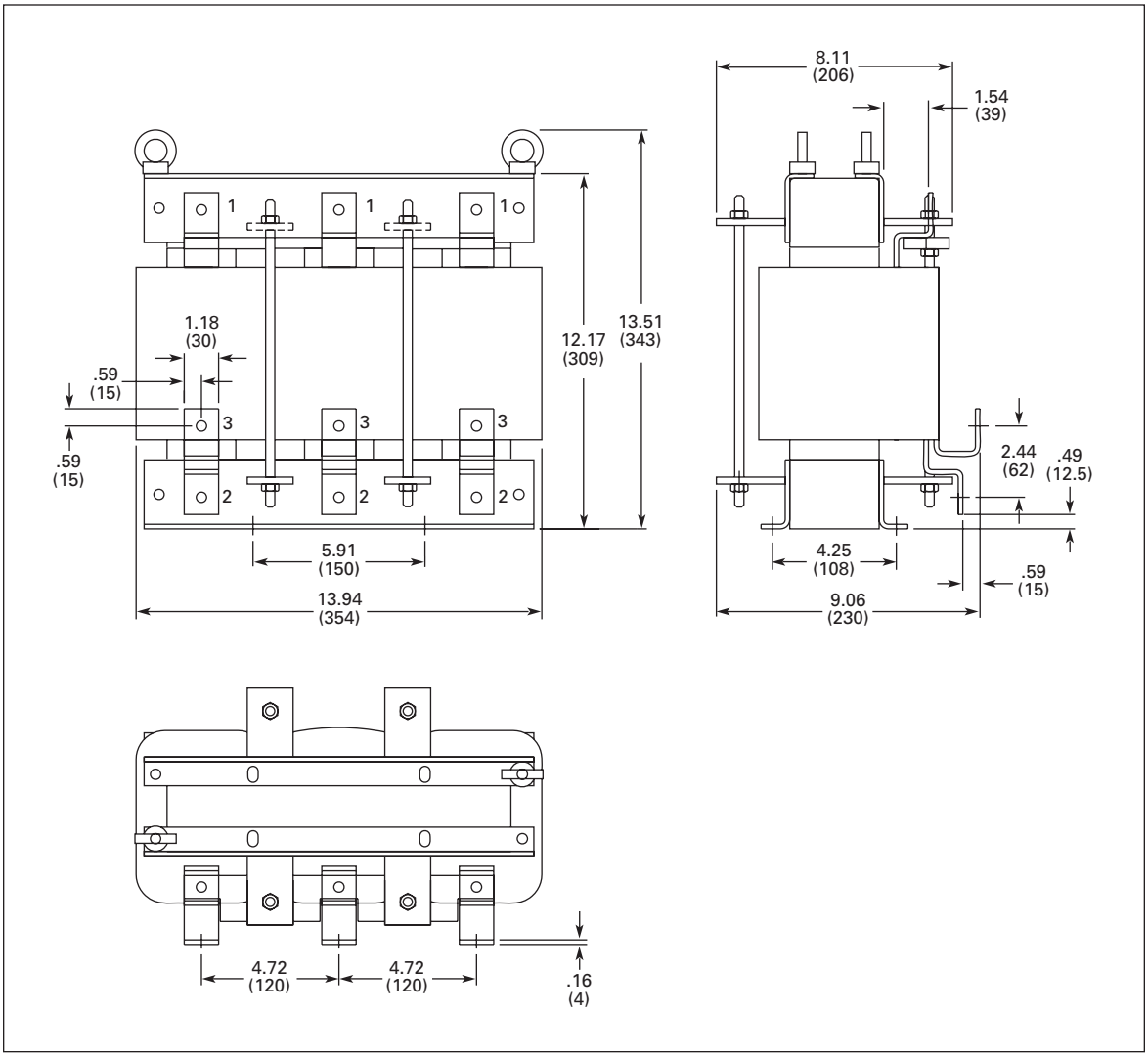

Figure A-21: AC Choke (CHK0261) Dimensions

Approximate Dimensions in Inches (mm)

Control Unit — SPX9000 FR10 – FR14

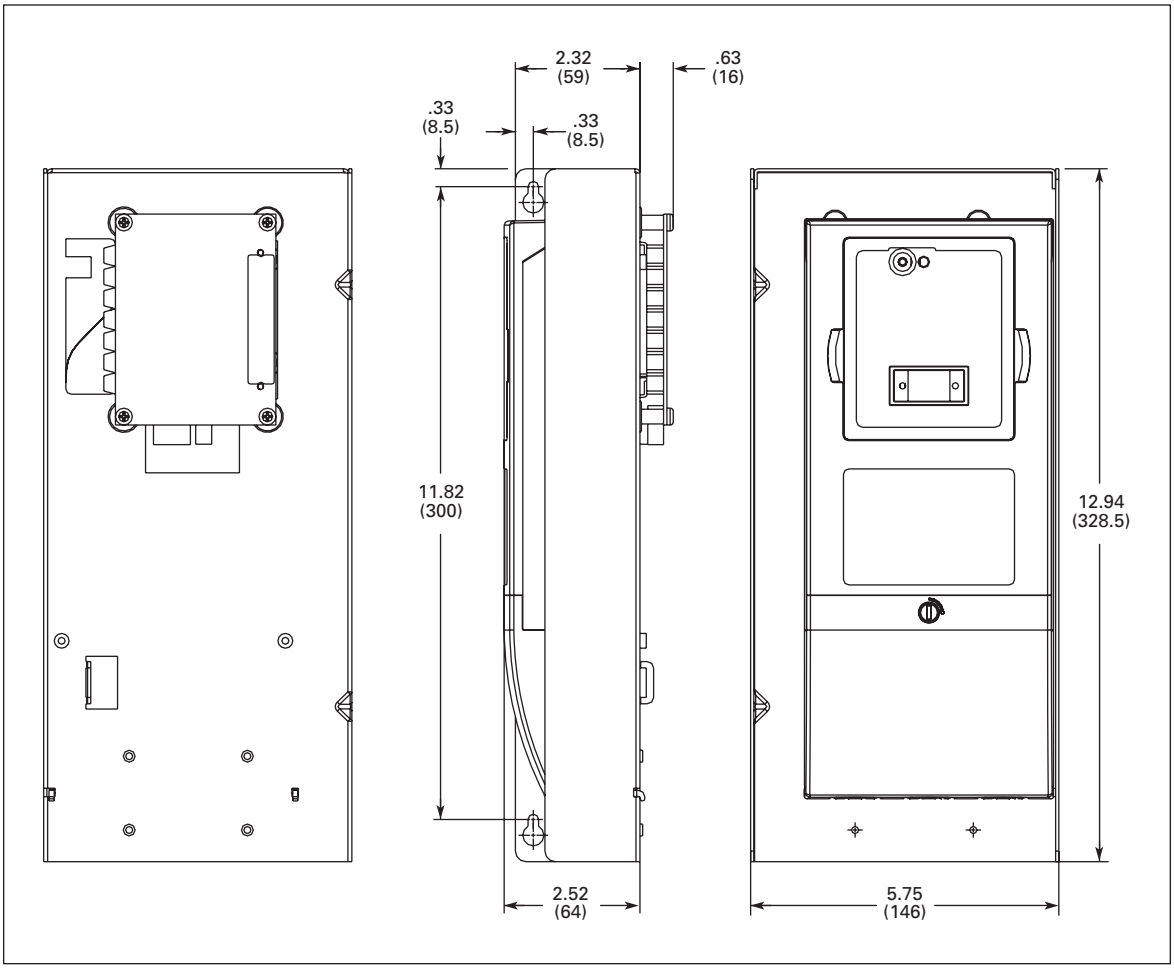

Figure A-22: Control Unit Dimensions

Approximate Dimensions in Inches (mm)

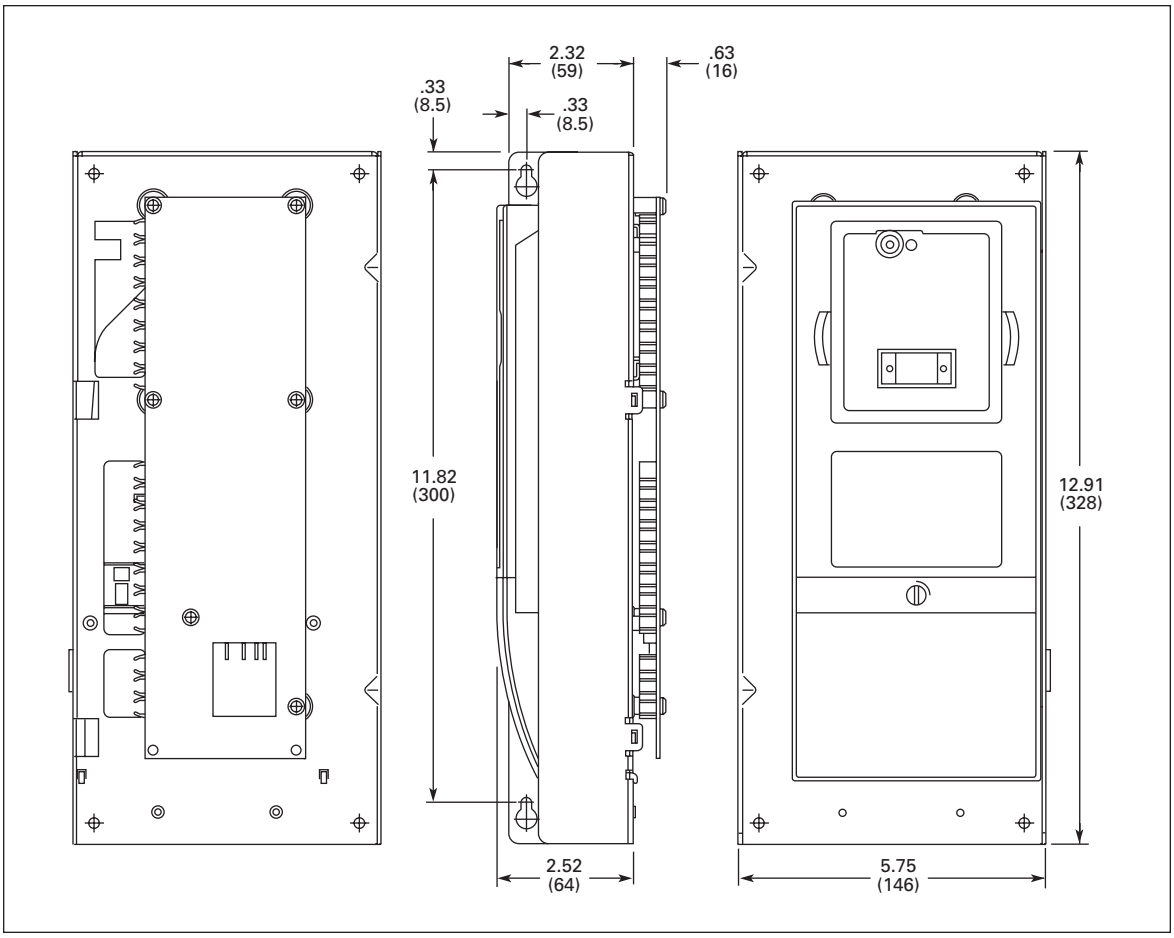

Figure A-23: Control Unit with Star-Coupler Board, FR12 or FR14 Only

Approximate Dimensions in Inches (mm)

EMC Capability

General

For products used within the European Community (EC), the Electro Magnetic Compatibility (EMC) directive states that the electrical equipment must not disturb the environment and must be immune to other Electro Magnetic Disturbances in the environment.

The design intent was to develop a family of drives, which is user friendly and cost effective, while fulfilling the user's needs. EMC compliance was a major consideration from the outset of the design.

The SVX9000/SPX9000 drive series is targeted at the world market. To ensure maximum flexibility, yet meet the EMC needs of different regions, all drives meet the highest immunity levels, while emission levels meet the requirements noted in the following section.

EMC Classification

The SVX9000/SPX9000 drive series are EMC classification H capable.

Class H

SVX9000/SPX9000 drives have been designed to fulfill the requirements of the product standard EN 61800-3+A11 for the 1st environment restricted distribution and the 2nd environment.

The emission levels correspond to the requirements of EN 61000-6-4.

SVX9000/SPX9000 series drives fulfill all applicable EMC immunity requirements (standards EN 61000-6-1, EN 61000-6-2 and EN 61800-3+A11).

Declaration of Conformity

The Manufacturer's Declarations of Conformity assuring the compliance of the SVX9000/SPX9000 drives with the European Community (EC) EMC-directives is available upon request.

Warranty and Liability Information

Eaton Electrical Inc. warrants the product delivered in the Cutler-Hammer shipping package to be free from defects in material and workmanship, under normal use and service, for twenty four (24) months from date of manufacturing. Products that fail during this period will be repaired or replaced at Eaton's discretion, with the same or a functionally equivalent product, provided the original purchaser (A) returns the failed product, and (B) provides proof of original date of purchase. This warranty does not apply, in the judgment of Eaton, to damage caused during shipment, handling, storage, or accidental misuse. The original purchaser of the product must obtain a Cutler-Hammer Return Material Authorization (RMA) number prior to returning any defective product. (When purchased through an Authorized Distributor, the Distributor should supply an RMA number to their customer.)

The maximum liability of this warranty is limited to the purchase price of the product. In no event, regardless of cause, shall Eaton Electrical Inc. be liable (a) for penalties or penalty clauses of any description, or (b) for certification not otherwise specifically provided herein and/or indemnification of purchaser or others for costs, damages or expenses, each arising out of or related to the product or services of any order or (c) for any damages resulting from loss of profits, use of products or for any incidental indirect or consequential damages, even if advised of the possibility of such damages.

Appendix B — Fault and Warning Codes

The faults with one asterisk are "Fault" only. The faults with two asterisks can be programmed for different actions based on the chosen application. See the appropriate application manual for specific application details.

Table B-1: Fault Codes

Fault Code	Fault	Possible Cause	Solution
1	Overcurrent	The SVX9000/SPX9000 has detected a high current (>4xI_n) in its output due to: • sudden heavy load increase • short in the motor • short in the cables to the motor • unsuitable motor	Check loading. Check motor. Check cables.
2	Overvoltage	The DC-link voltage has exceeded its high limit due to: • too short a deceleration time • high voltage levels or surges in the utility supply	Make the deceleration time longer. Use a chopper and brake resistor (standard on some models, available as an option on others). Correct utility supply voltage (level is too high). Add input impedance to limit surges.
3**	Ground (Earth) Fault	Current sensing indicates that the sum of motor phase currents is not zero. • insulation failure in motor or motor cables	Check the motor and motor cables.
5	Charging Switch	The charging switch was open when the START command was been given due to: • faulty operation • component failure	Reset the fault and restart. Should the fault re-occur, contact your Cutler-Hammer distributor.
6	Emergency stop	An Emergency stop signal was received from one of the digital inputs	Determine the reason for the Emergency stop and remedy it.
7	Saturation trip	• defective component • motor or motor cable short	Cannot be reset from the keypad. Switch off power. If this fault appears simultaneously with Fault 1, check the motor and motor cables. IF THE PROBLEM IS NOT IN THE MOTOR OR ITS CABLES, DO NOT RE-CONNECT POWER! Contact your Cutler-Hammer distributor.
8	System fault	• component failure • faulty operation **Note**: exceptional fault data record, see the Active Fault Menu and Fault Time Data Record for more information	Reset the fault and restart. Should the fault reoccur, contact your Cutler-Hammer distributor.

Table B-1: Fault Codes (Continued)

Fault Code	Fault	Possible Cause	Solution
9**	Undervoltage	DC-link voltage is less than the minimum safe operating voltage limit. • most probable cause: too low a supply voltage • SVX9000/SPX9000 internal fault	If there was a supply voltage loss or dip, reset the fault and restart the SVX9000/SPX9000. Check the supply voltage. If it was within specification at the time of the fault, an internal failure has occurred. Contact your Eaton distributor.
10**	Input line supervision	Input line phase is low or missing.	Check the utility supply voltage, cables and connections.
11**	Output phase supervision	Current sensing indicates that there is no current in one motor phase.	Check the motor cables, connections and motor.
12	Brake chopper supervision	• no brake resistor installed • brake resistor is open • brake chopper failure	Check the brake resistor. If the resistor is ok, the chopper is faulty. Contact your Eaton distributor.
13	SVX9000/SPX9000 undertemperature	Heatsink temperature is under 14°F (-10°C)	Provide supplemental heating or relocate the SVX9000/SPX9000 to a warmer location.
14	SVX9000/SPX9000 overtemperature	Heatsink temperature is over 194°F (90°C).	An overtemperature warning is issued when the heatsink temperature exceeds 185°F (85°C), a fault occurs at 194°F (90°C). Check for the correct amount and unrestricted flow of cooling air. Check the heatsink for dust or dirt buildup. Check the highest ambient temperature level. Make sure that the switching frequency is not set too high in relation to ambient temperature and motor load.
15**	Motor stalled	• motor or load mechanical failure • load is too high • stall parameter settings incorrect	Check motor, mechanical system and load level. Confirm the stall parameter settings.
16**	Motor overtemperature	• motor is overloaded • motor overheating has been detected by the SVX9000/ SPX9000 motor temperature model	Decrease the motor load. If no motor overload exists, check the temperature model parameters.
17**	Motor underload	• mechanical or load problems • underload parameter settings incorrect	Check the motor. Check for a loose belt, broken coupling or load problems. Confirm the underload parameter settings.
22	EEPROM checksum fault	Parameter save fault • faulty operation • component failure	Upon reset of this fault, the SVX9000/ SPX9000 will automatically reload the parameter default settings. Check all parameter settings after reset. If the fault reoccurs, contact your Eaton distributor.

Table B-1: Fault Codes (Continued)

Fault Code	Fault	Possible Cause	Solution
24*	Counter fault	Values displayed on the counters are incorrect	
25	Microprocessor watchdog fault	• faulty operation • component failure	Reset the fault and restart. Should the fault reoccur, contact your Eaton distributor.
26	Startup prevented	Startup of the drive has been prevented	Check Start Enable/Interlock settings.
29**	Thermistor fault	The thermistor input of an option board has detected a high motor temperature	Check the motor cooling and the motor loading. Check the thermistor connection. (If the thermistor input of an option board is not being used, it must be short-circuited).
31	IGBT temperature (hardware)	IGBT Inverter Bridge overtemperature protection has detected a high short-term overload current	Check loading. Check motor size.
32	Fan cooling	The SVX9000/SPX9000 cooling fan did not start when commanded	Contact your Eaton distributor.
34	CAN bus communication	Sent message not acknowledged	Ensure that there is another device on the bus with the appropriate configuration.
36	Control unit	The control unit cannot control the power unit and vice-versa	Change the control unit.
37*	Device change (same type)	• option board changed • different power rating of drive	Reset. **Note:** No Fault Time Data Record is made.
38*	Device added (same type)	• option board added • drive of different power rating added	Reset. **Note:** No Fault Time Data Record is made.
39*	Device removed	• option board removed • drive removed	Reset. **Note:** No Fault Time Data Record is made.
40	Device unknown	Unknown option board or drive	Contact your Eaton distributor.
41	IGBT temperature	IGBT Inverter Bridge overtemperature protection has detected a high short-term overload current	Check loading. Check motor size.
42**	Brake resistor overtemperature	Brake resistor overtemperature protection has detected excessive braking	Set the deceleration time longer. Use an external brake resistor.

Table B-1: Fault Codes (Continued)

Fault Code	Fault	Possible Cause	Solution
43	Encoder fault	**Note**: exceptional fault data record, see the Active Fault Menu and Fault Time Data Record for more information. Additional codes: **1** = Encoder 1 channel A is missing **2** = Encoder 1 channel B is missing **3** = Both encoder 1 channels are missing **4** = Encoder reversed	Check encoder channel connections. Check the encoder board.
44*	Device change (different type)	• option board changed • different power rating of drive	Reset. **Note:** No Fault Time Data Record is made. **Note:** Application parameter values restored to default.
45*	Device added (different type)	• option board added • drive of different power rating added	Reset. **Note:** No Fault Time Data Record is made. **Note:** Application parameter values restored to default.
50**	Analog input I_{in} < 4 mA (for the signal range 4 to 20 mA)	Current at the analog input is < 4 mA. • control cable is broken or loose • signal source has failed	Check the current loop, signal source and wiring.
51	External fault	Digital input set as an external fault input has been triggered	Check source of trigger.
52	Keypad communication fault	The connection between the control keypad and the SVX9000/SPX9000 has been lost	Check the keypad connection and keypad cable.
53	Communication bus fault	The data connection between the communication bus master and the communication bus board has failed	Check installation. If installation is correct contact your Eaton distributor.
54	Slot fault	Defective option board or slot	Check that the board is properly installed and seated in slot. If the installation is correct, contact your Eaton distributor.
56	PT100 board temperature fault	Temperature limit values set for the PT100 board parameters have been exceeded	Determine the cause of the high temperature.

Appendix C — Troubleshooting Charts Using Fault Codes

F1 — Overcurrent

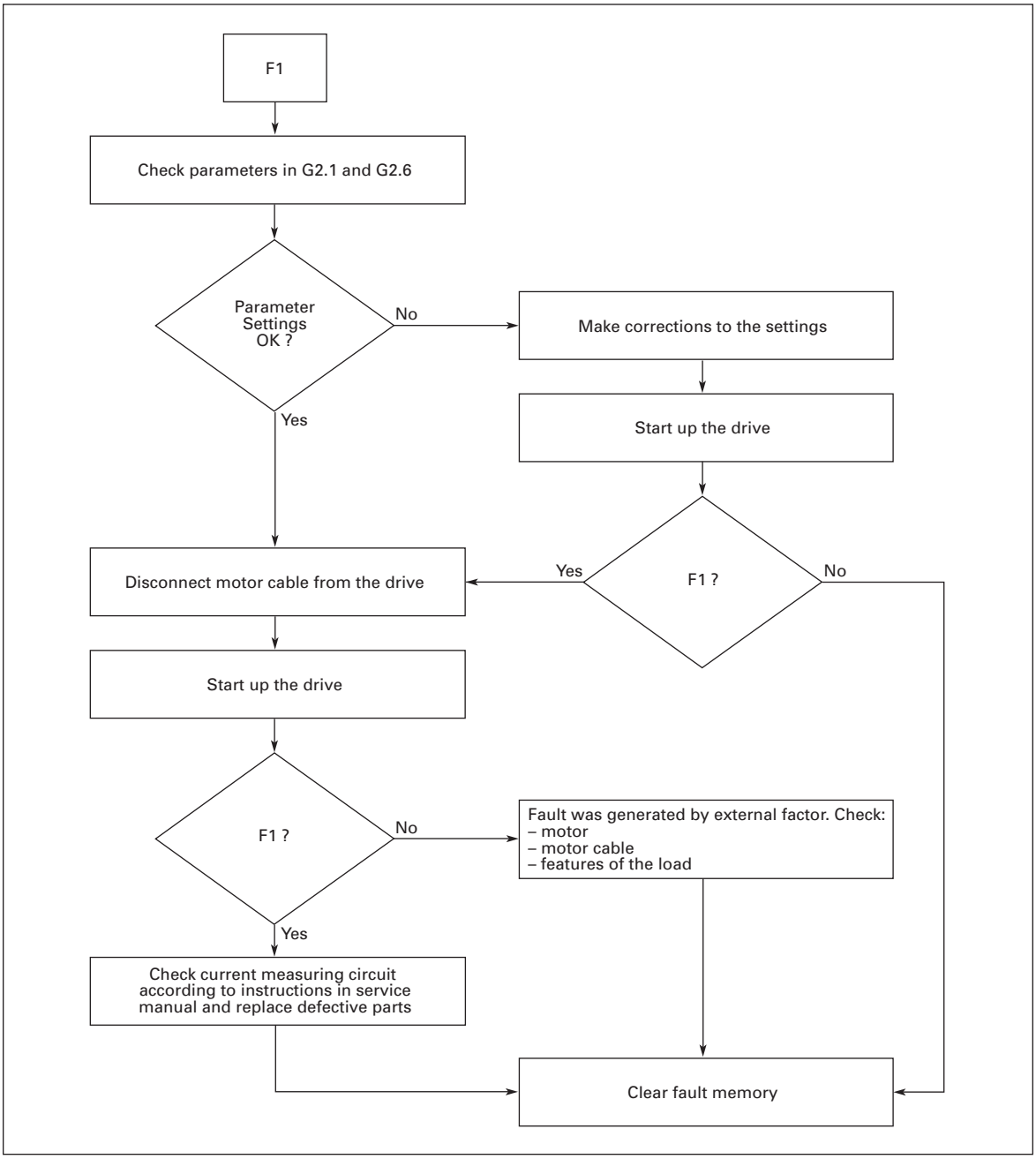

Figure C-1: F1 — Overcurrent

F2 — Overvoltage

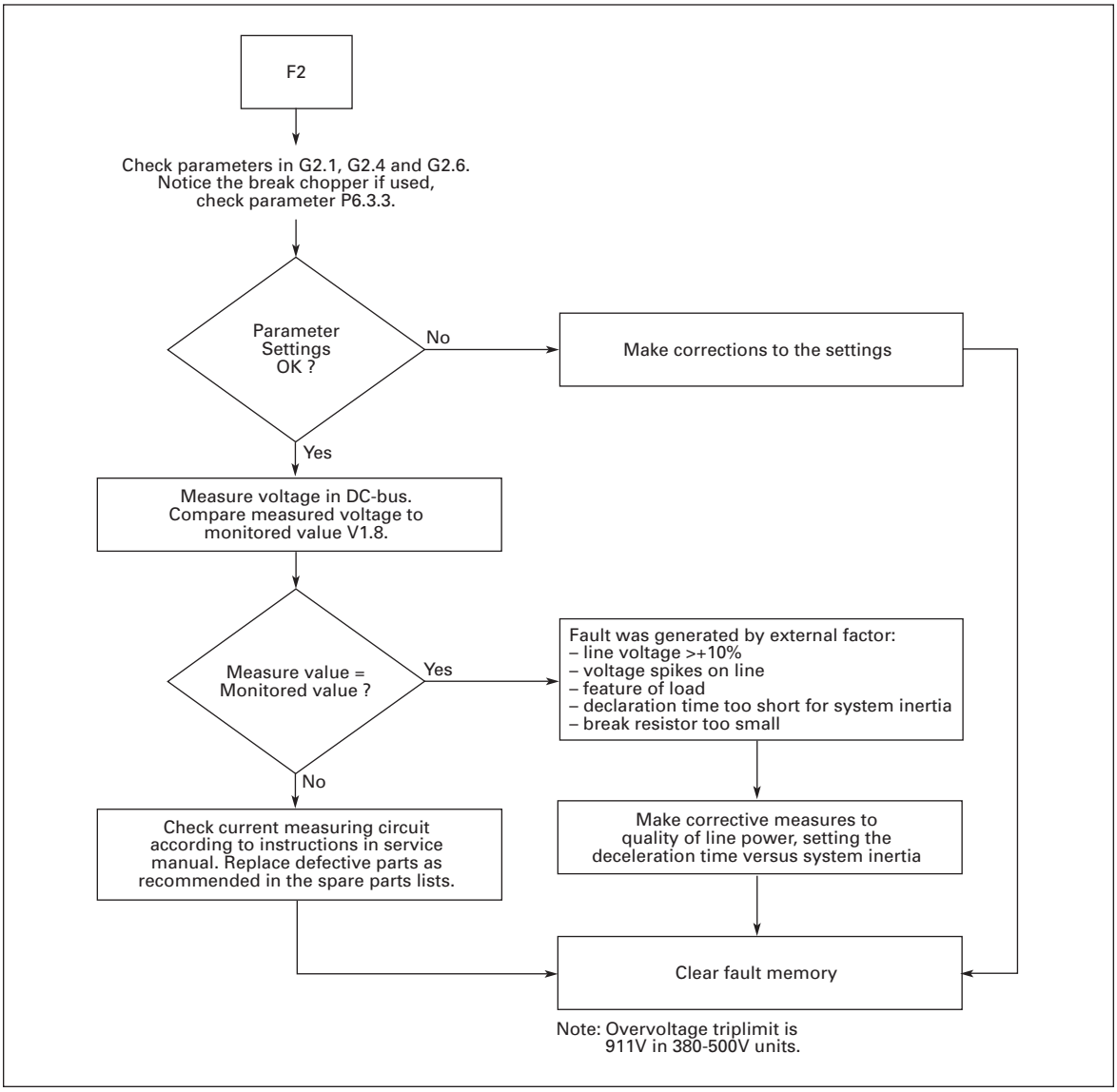

Figure C-2: F2 — Overvoltage

F3 — Earth Fault

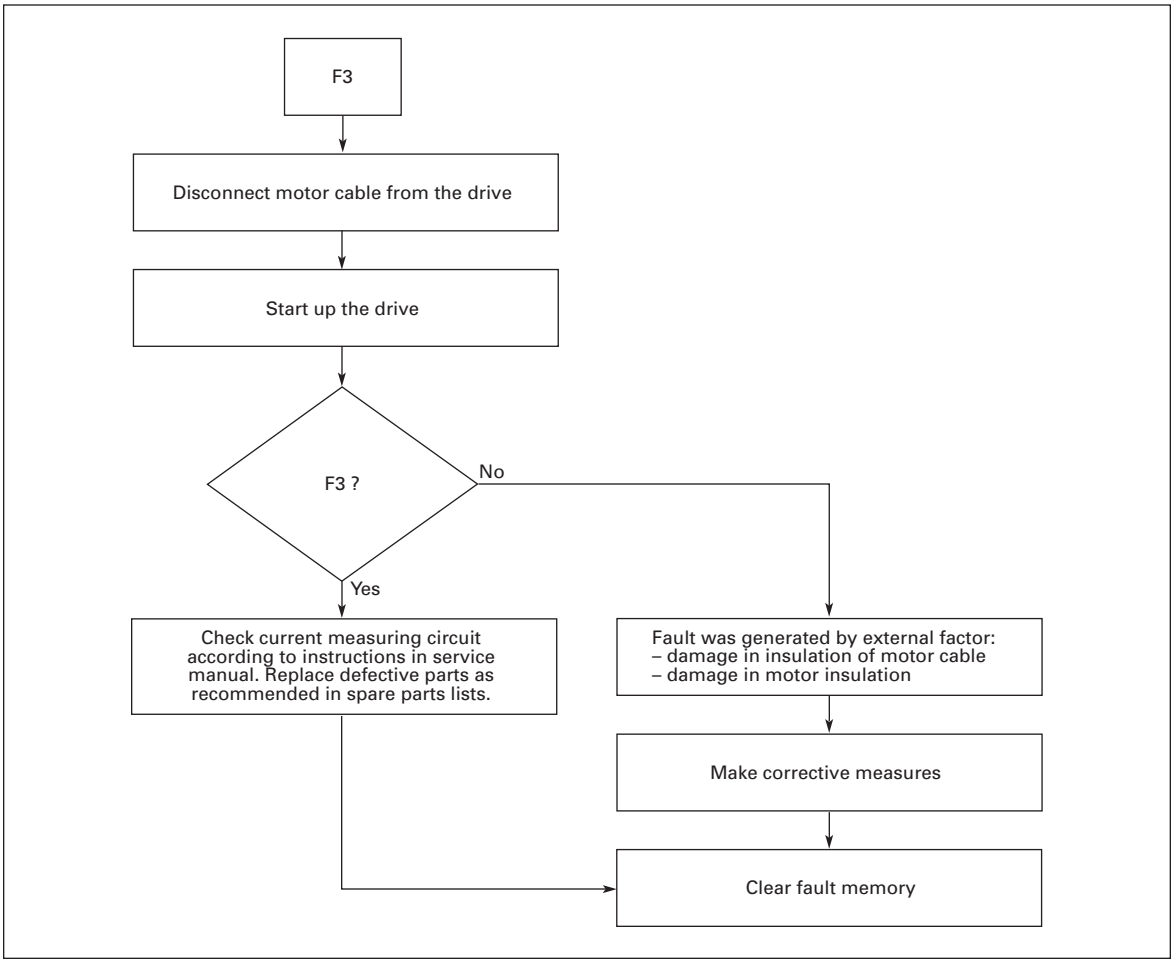

Figure C-3: F3 — Earth Fault

F5 — Charging Switch

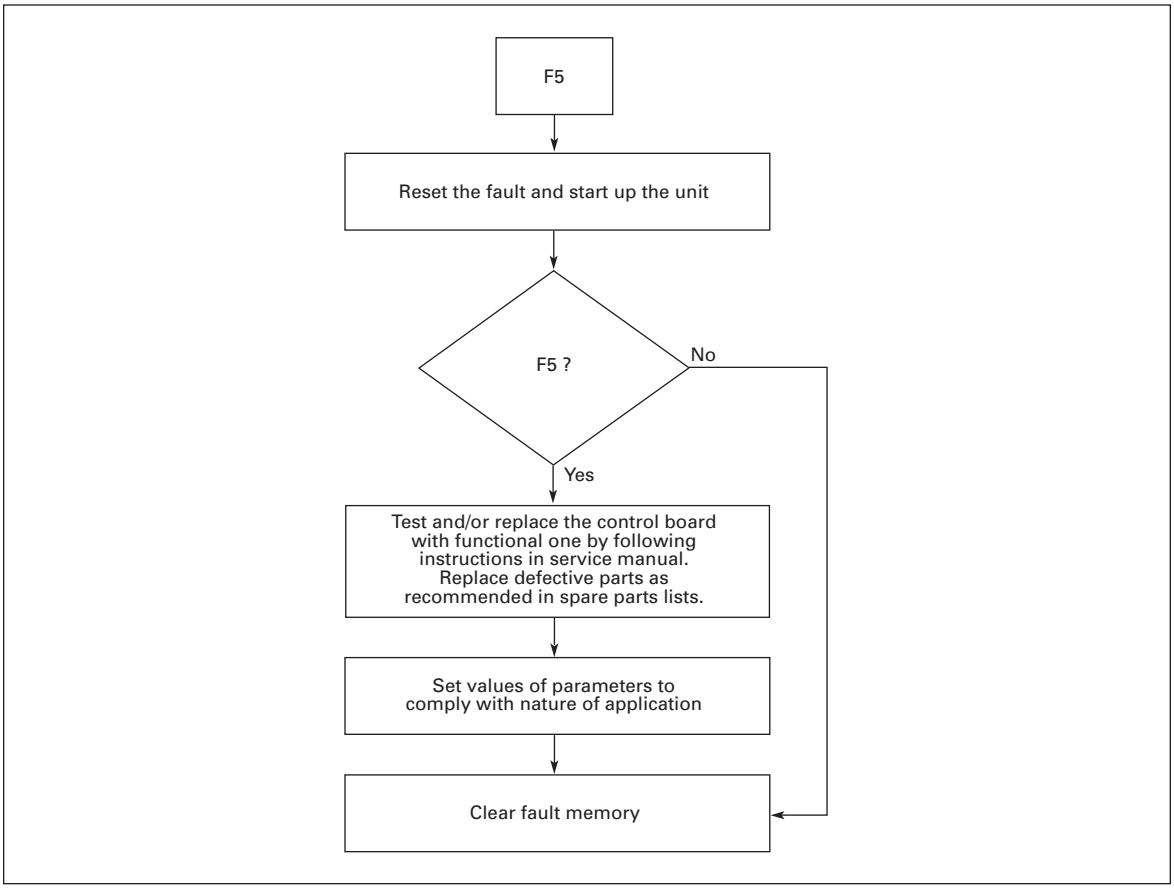

Figure C-4: F5 — Charging Switch

F6 — Emergency Stop

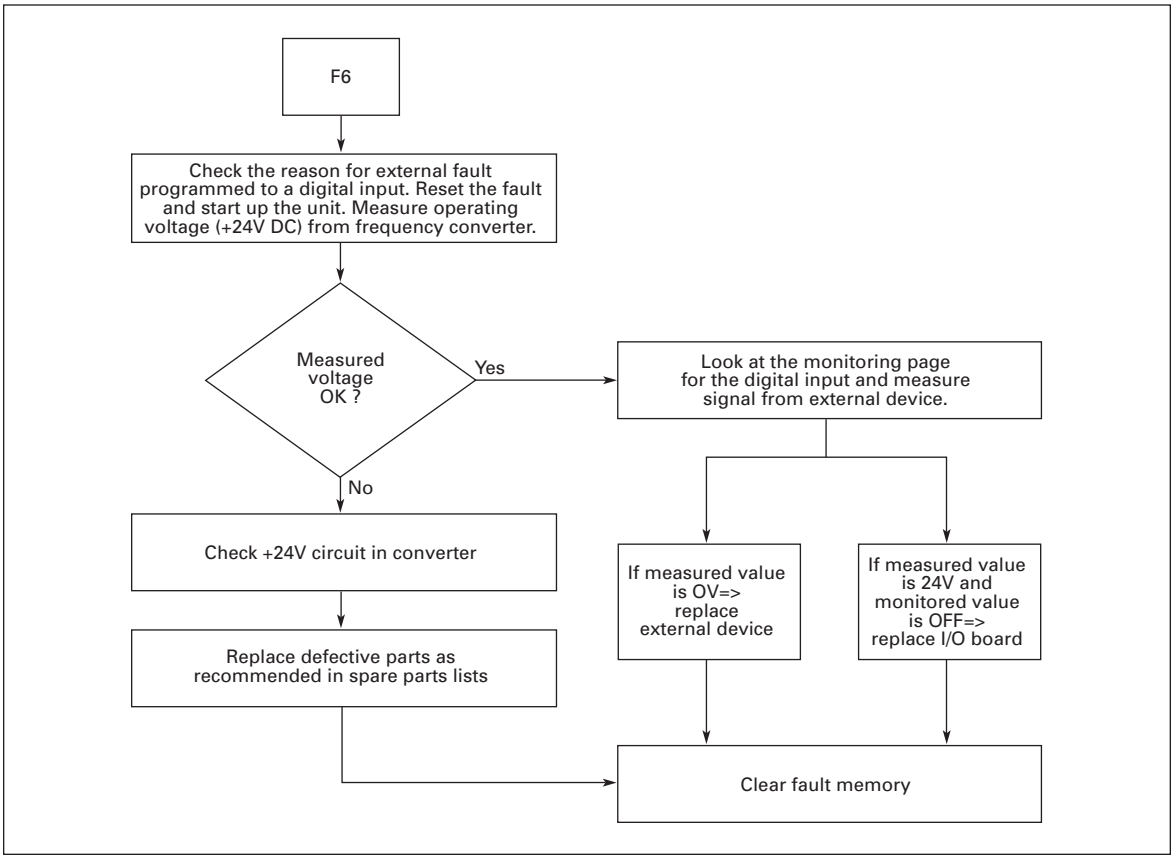

Figure C-5: F6 — Emergency Stop

F7 — Saturation Trip

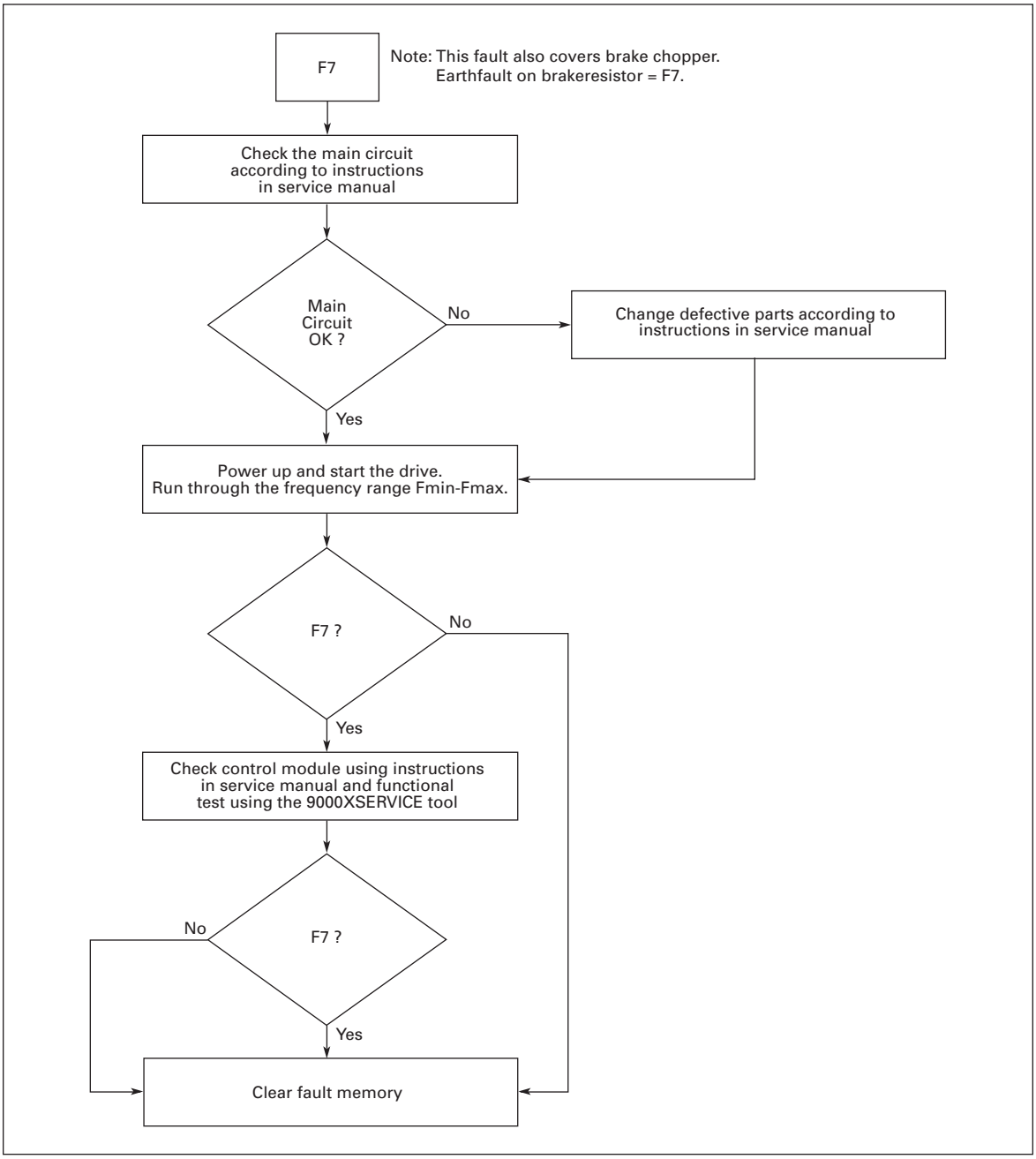

Figure C-6: F7 — Saturation Trip

F8 — System Fault

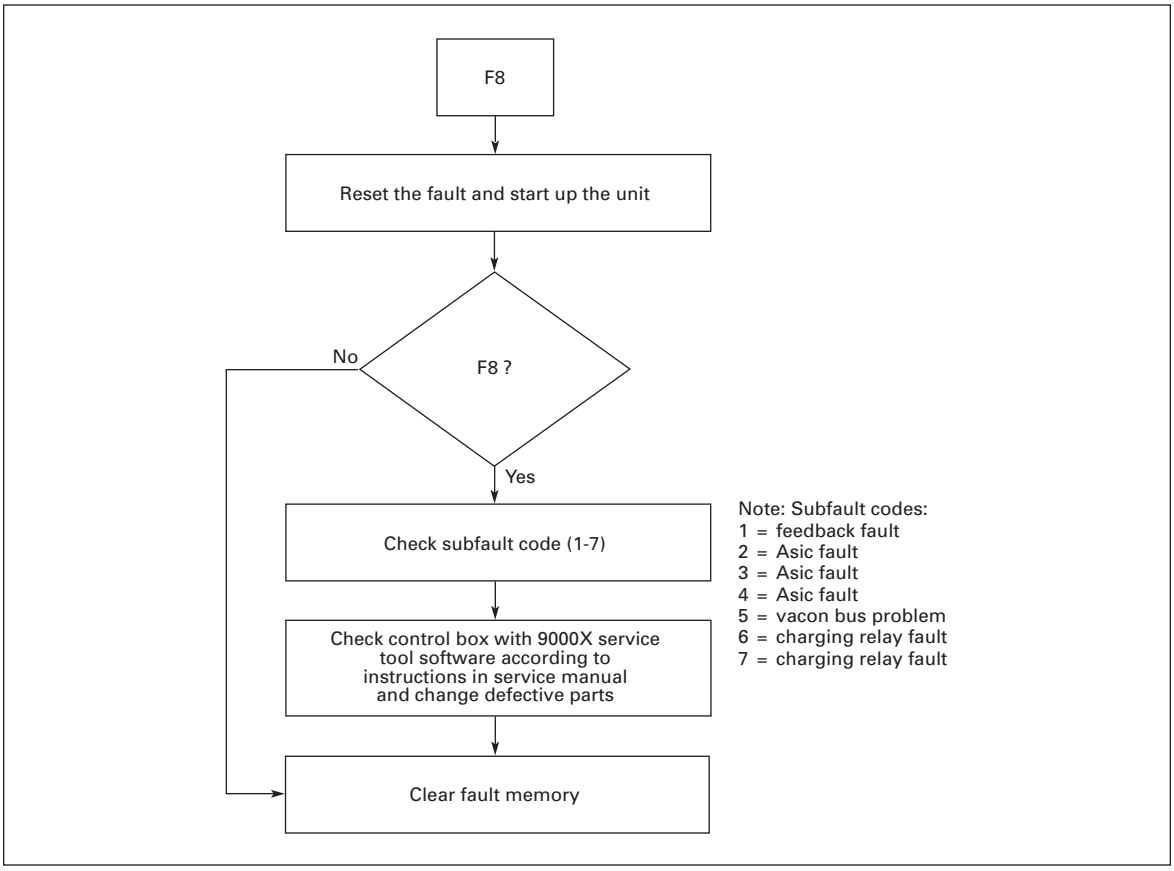

Figure C-7: F8 — System Fault

F9 — Undervoltage

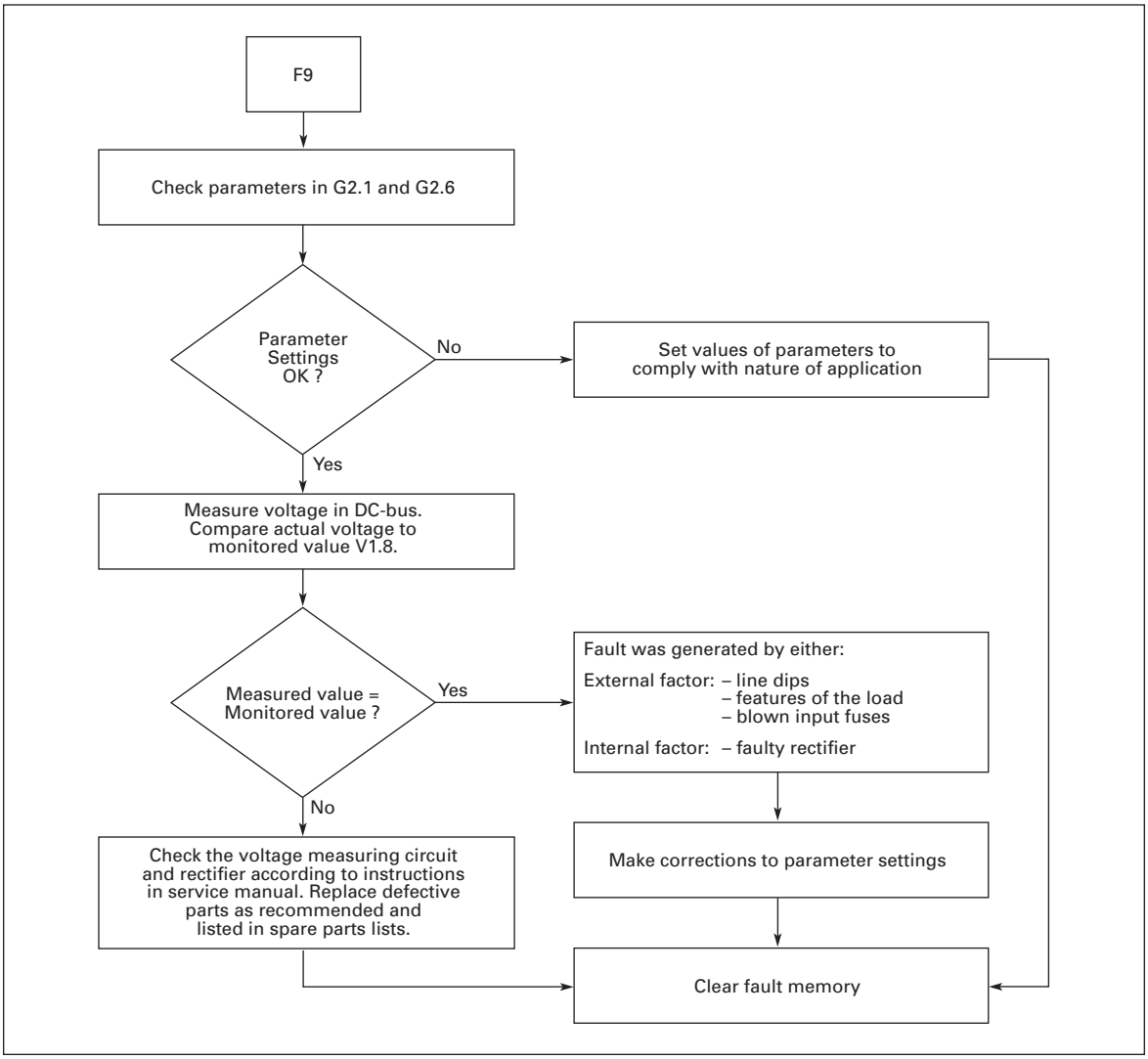

Figure C-8: F9 — Undervoltage

F10 — Input Line Supervision

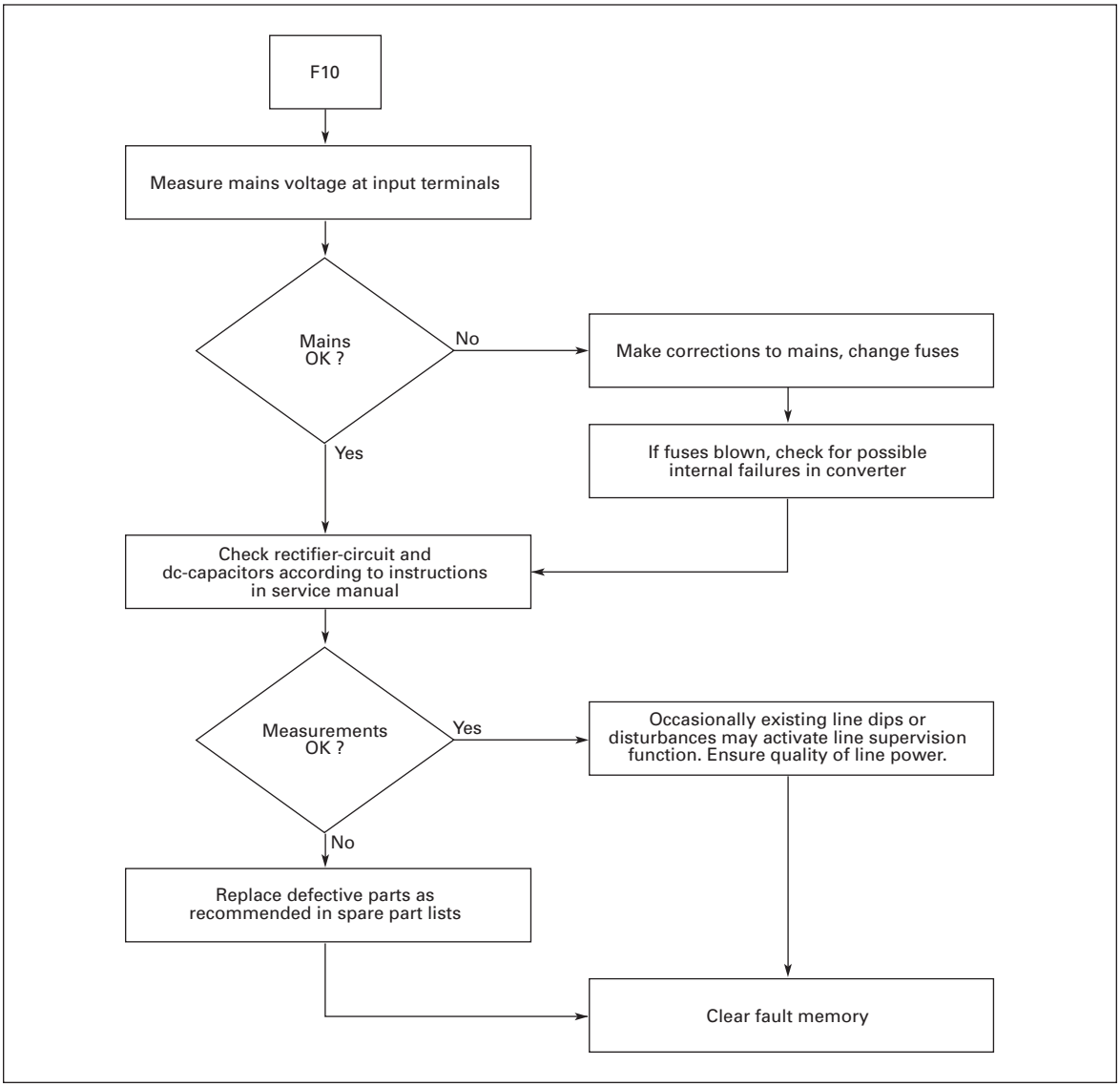

Figure C-9: F10 — Input Line Supervision

F11 — Output Phase Supervision

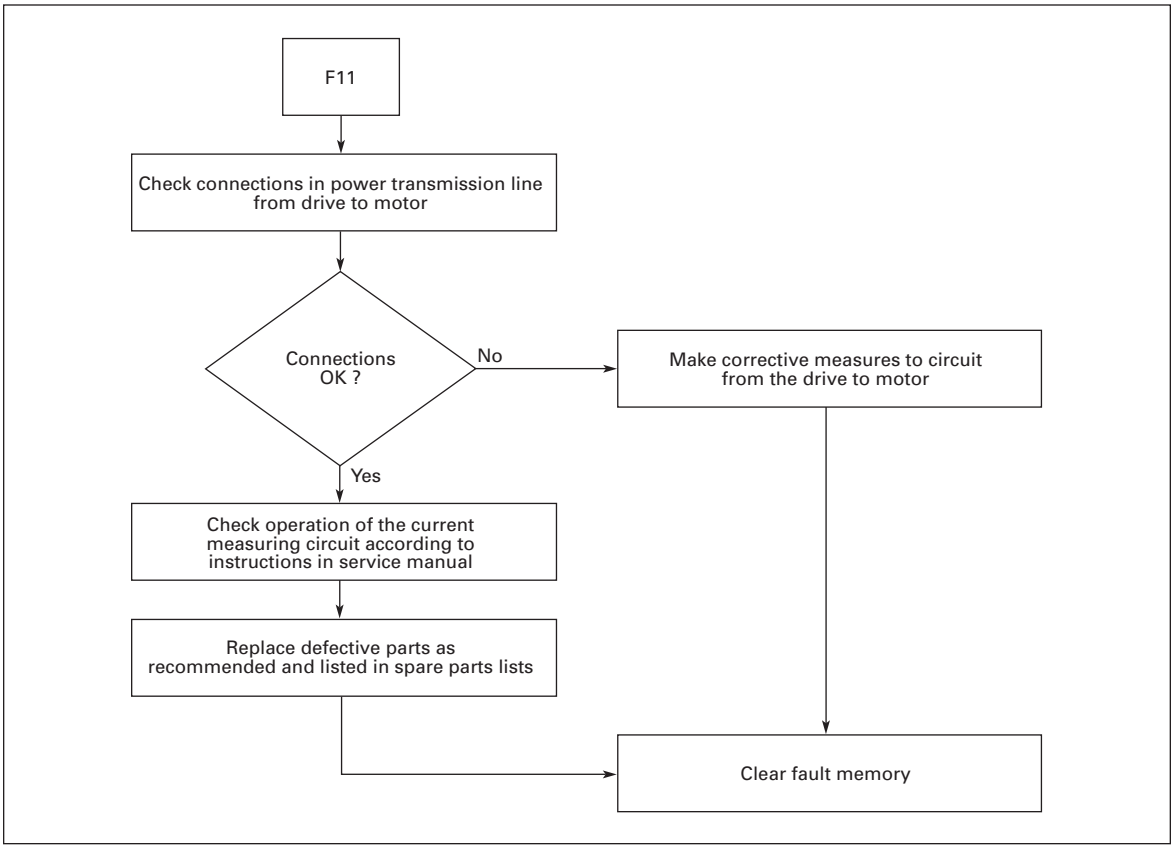

Figure C-10: F11 — Output Phase Supervision

F12 — Brake Chopper Supervision

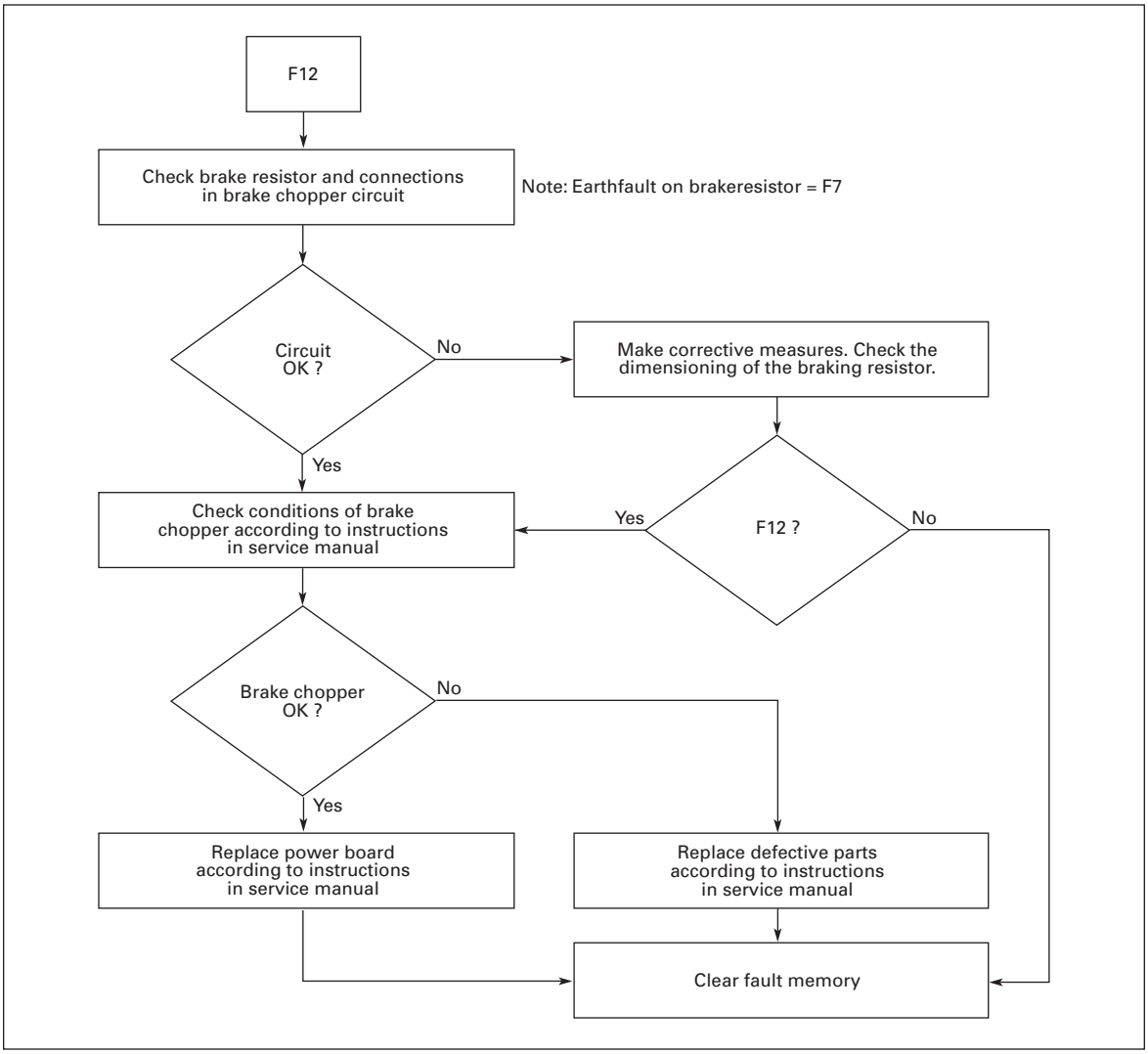

Figure C-11: F12 — Brake Chopper Supervision

F13 — Frequency Converter Under Temperature

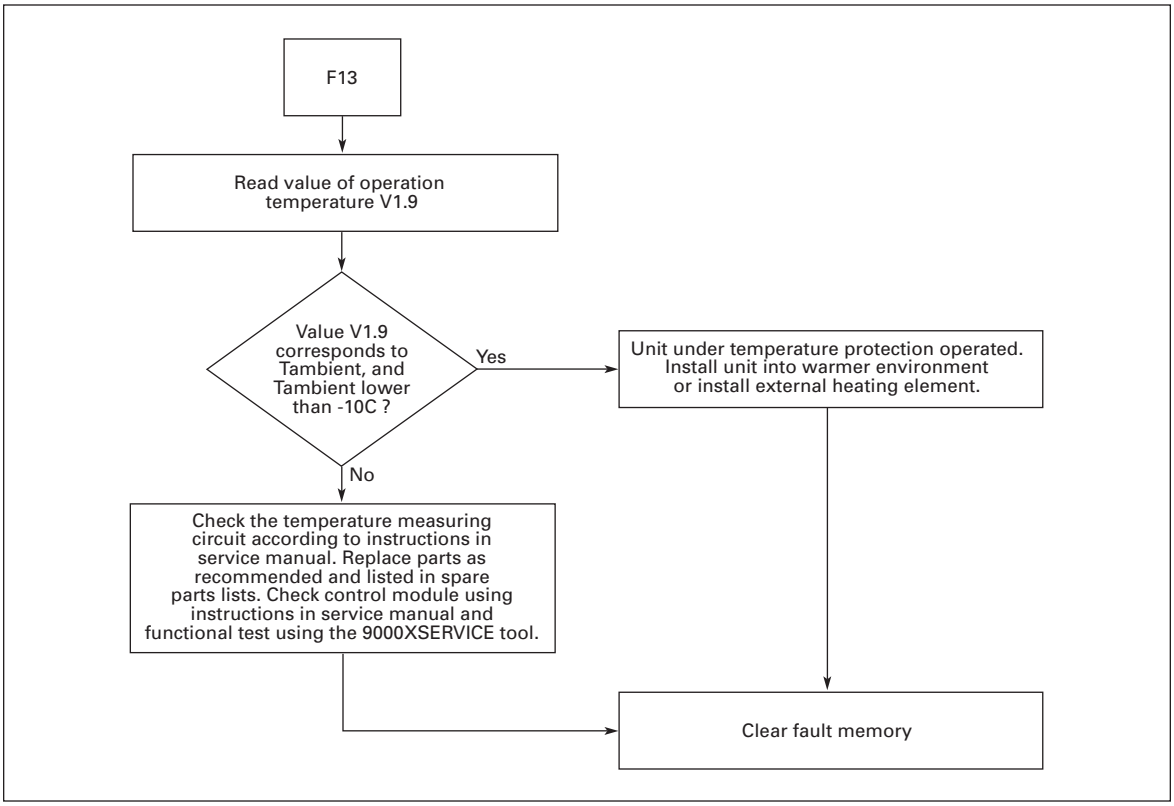

Figure C-12: F13 — Frequency Converter Under Temperature

F14 — Frequency Converter Over Temperature

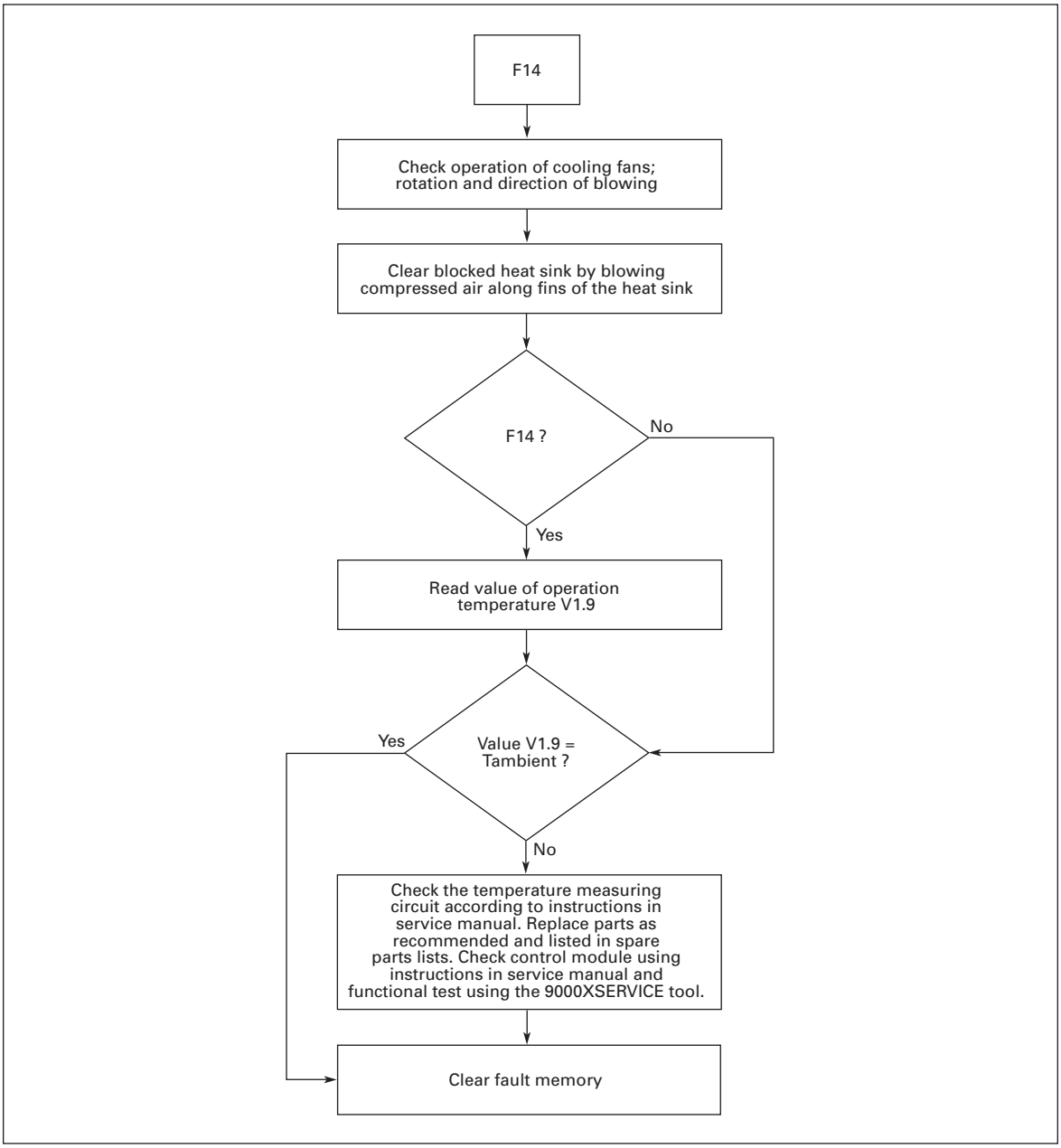

Figure C-13: F14 — Frequency Converter Over Temperature

F15 — Motor Stalled

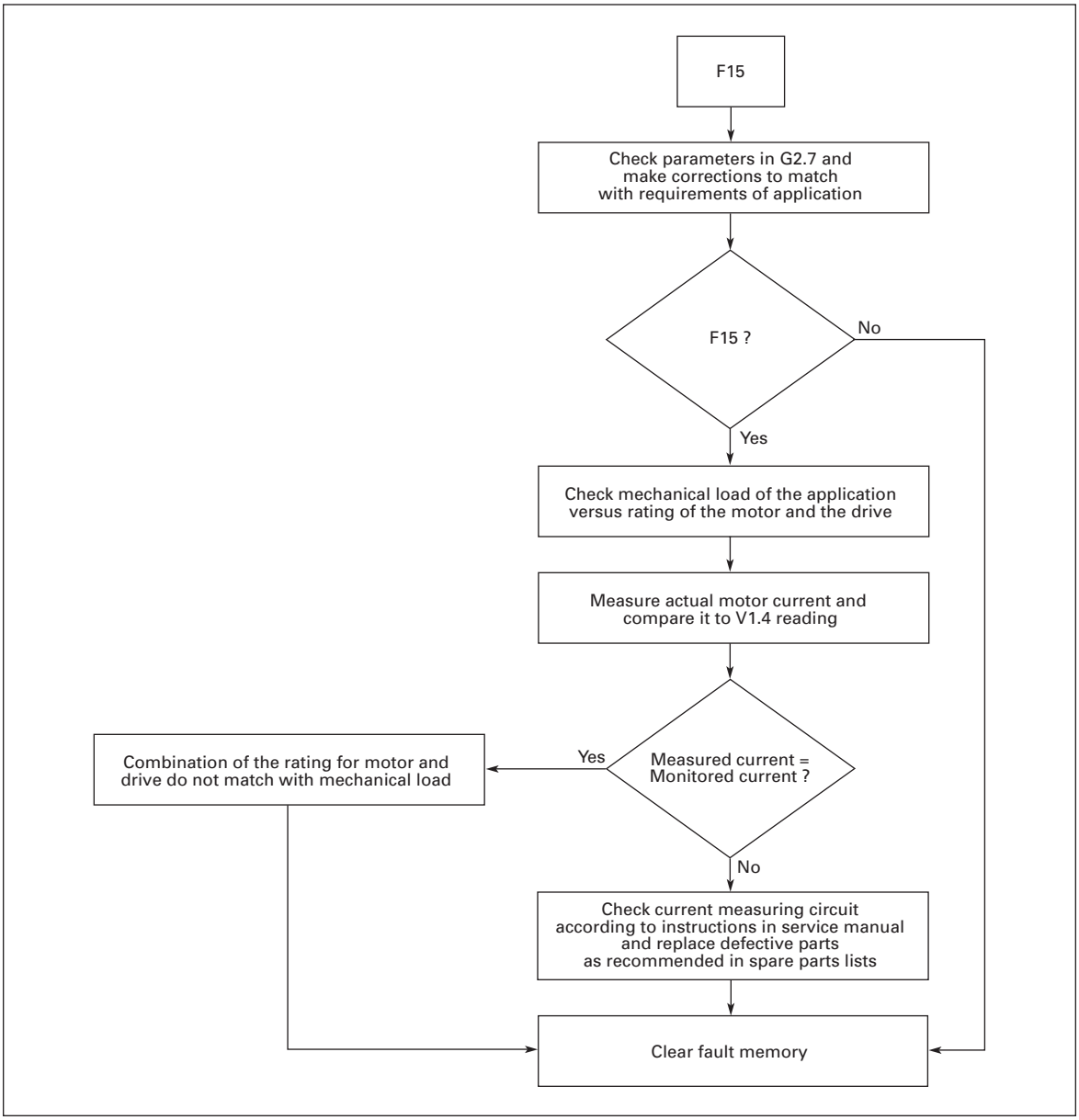

Figure C-14: F15 — Motor Stalled

F16 — Motor Over Temperature

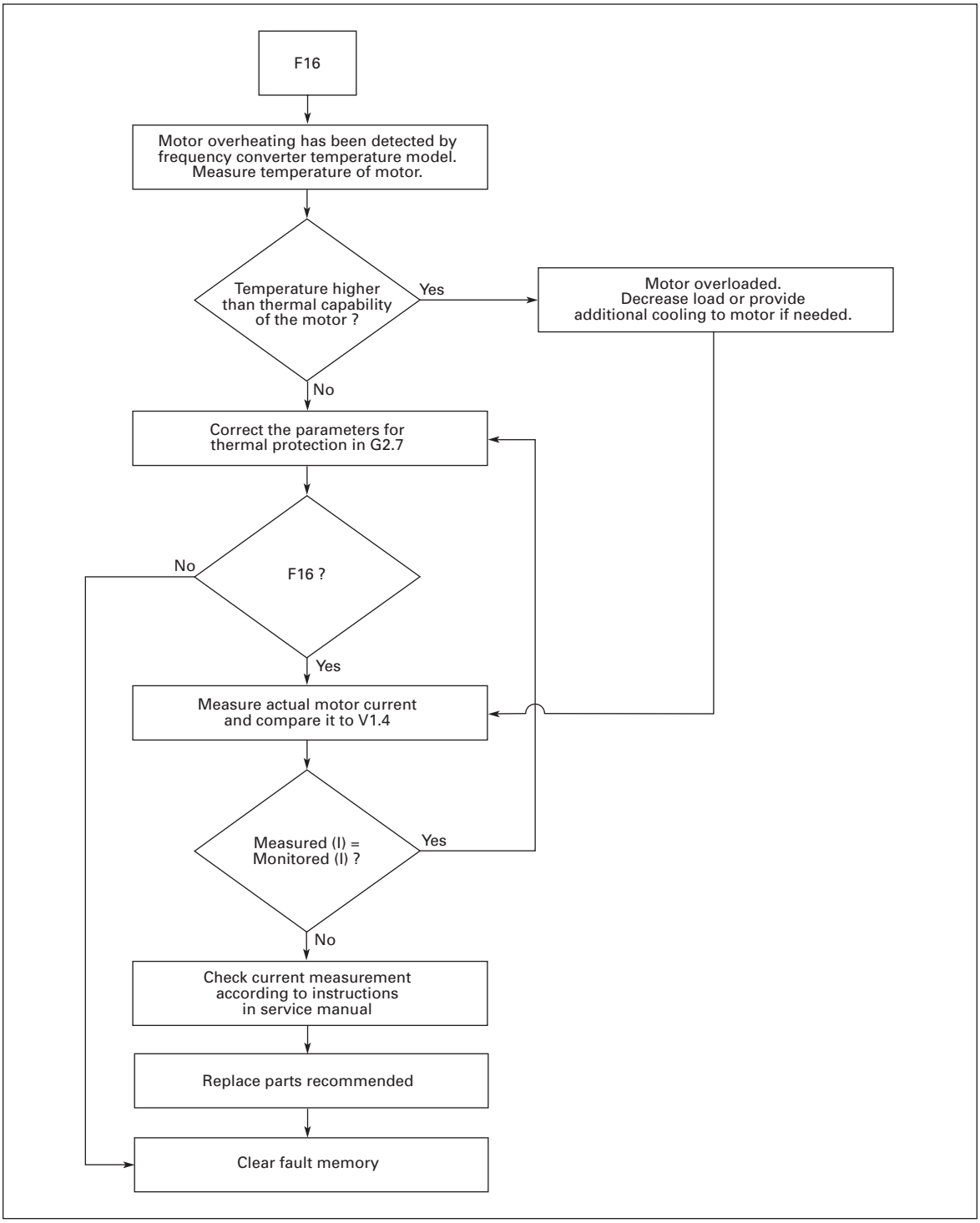

Figure C-15: F16 — Motor Over Temperature

F17 — Motor Under Load

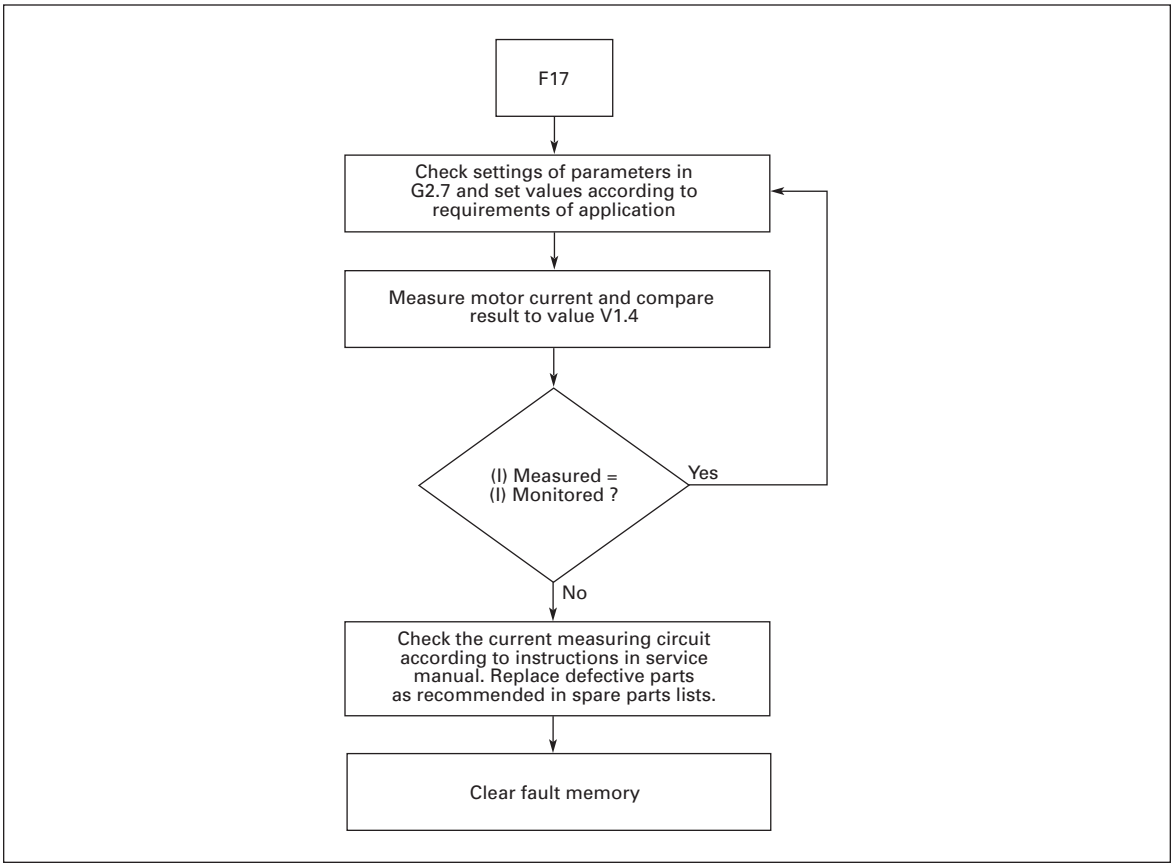

Figure C-16: F17 — Motor Under Load

F22 — Param Fault

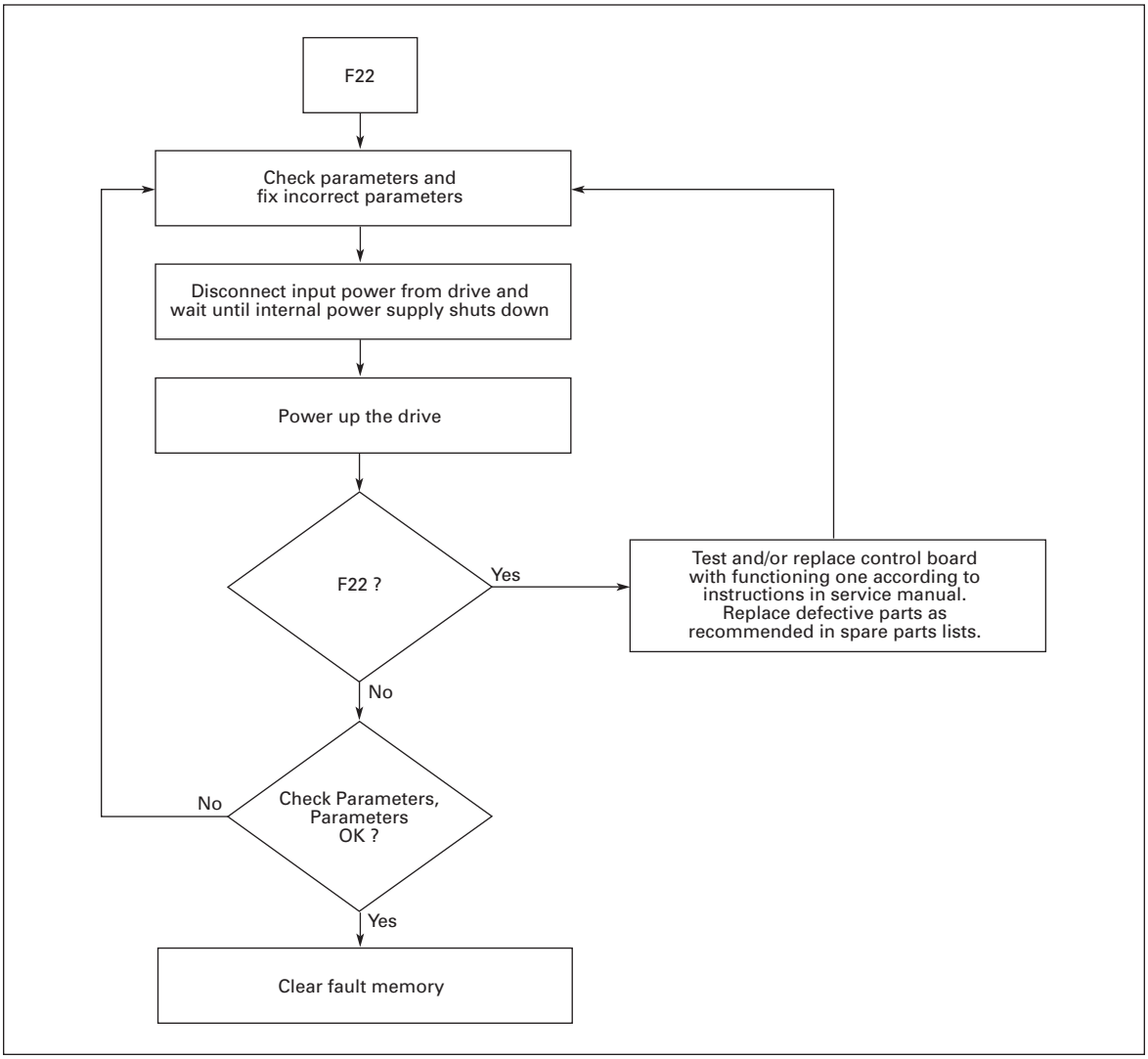

Figure C-17: F22 — Param Fault

F24 — Counter Fault

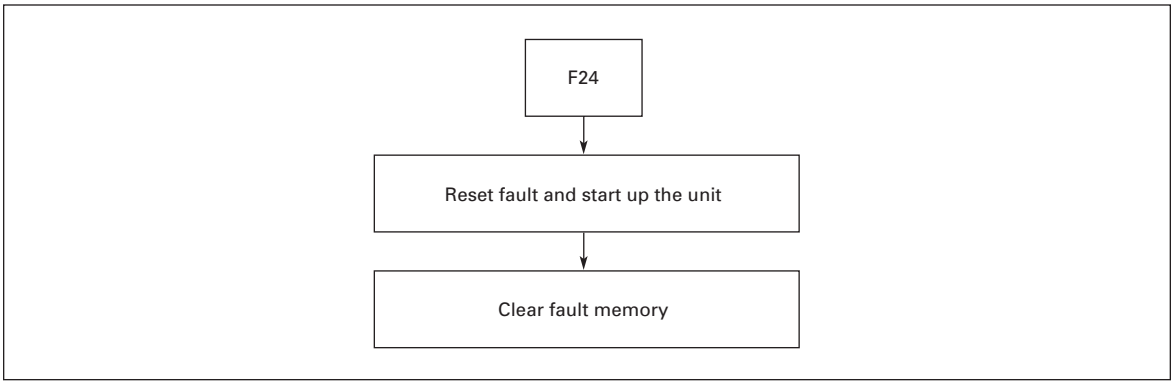

Figure C-18: F24 — Counter Fault

F25 — Microprocessor Watchdog Fault

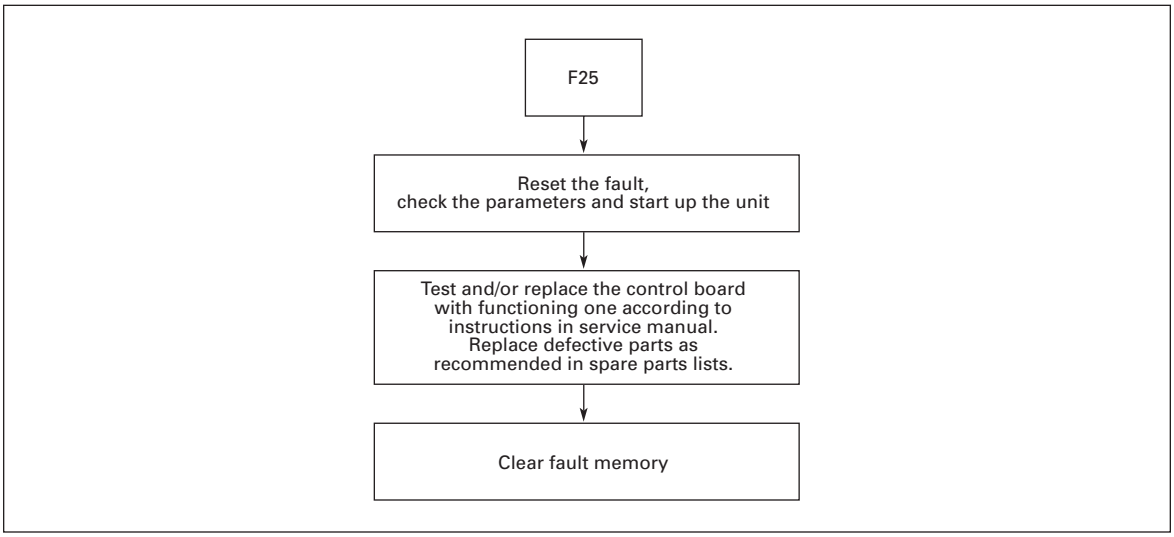

Figure C-19: F25 — Microprocessor Watchdog Fault

F31 — IGBT Temperature (Hardware)

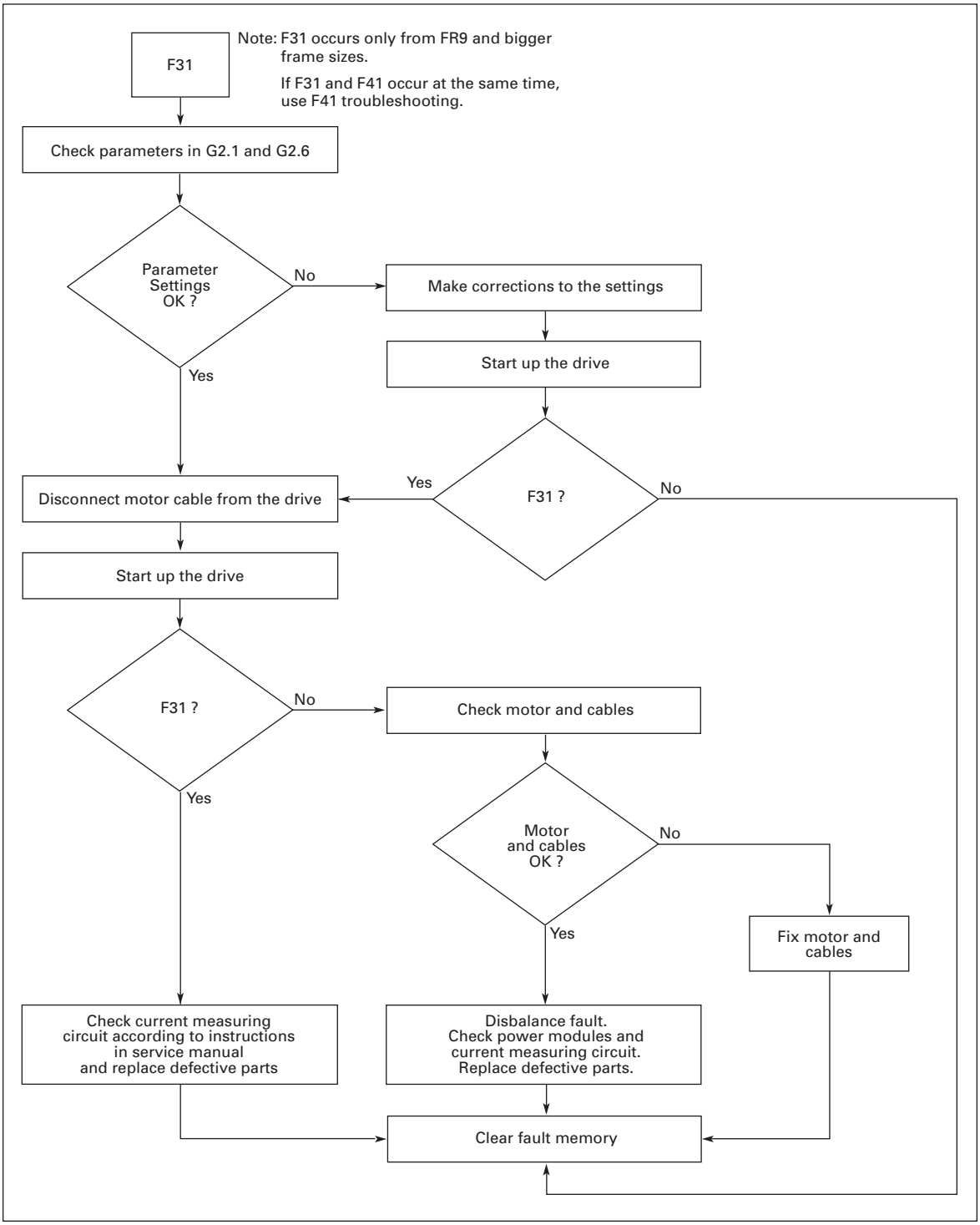

Figure C-20: F31 — IGBT Temperature (Hardware)

F32 — Fan Cooling

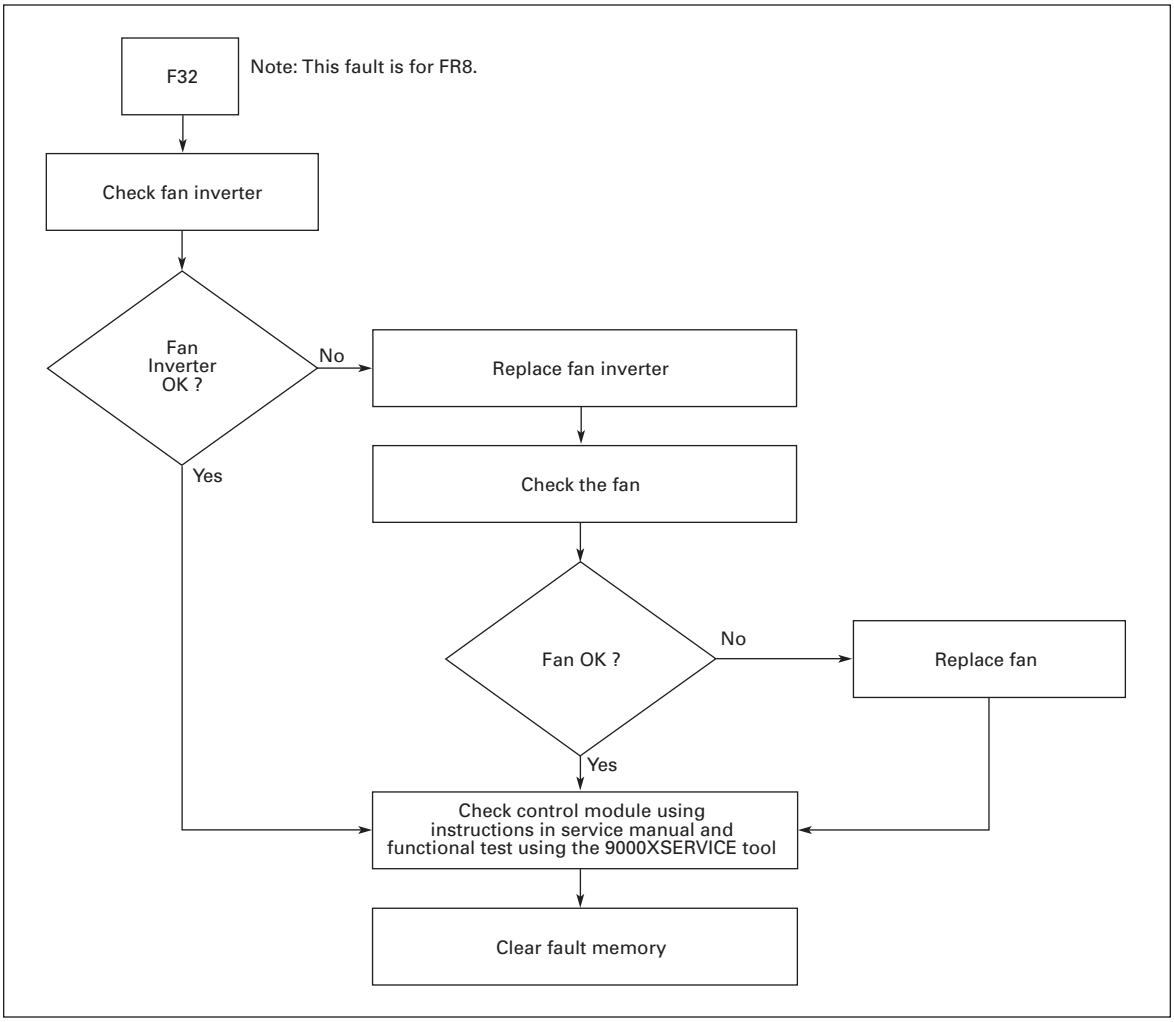

Figure C-21: F32 — Fan Cooling

F36 — Control Unit

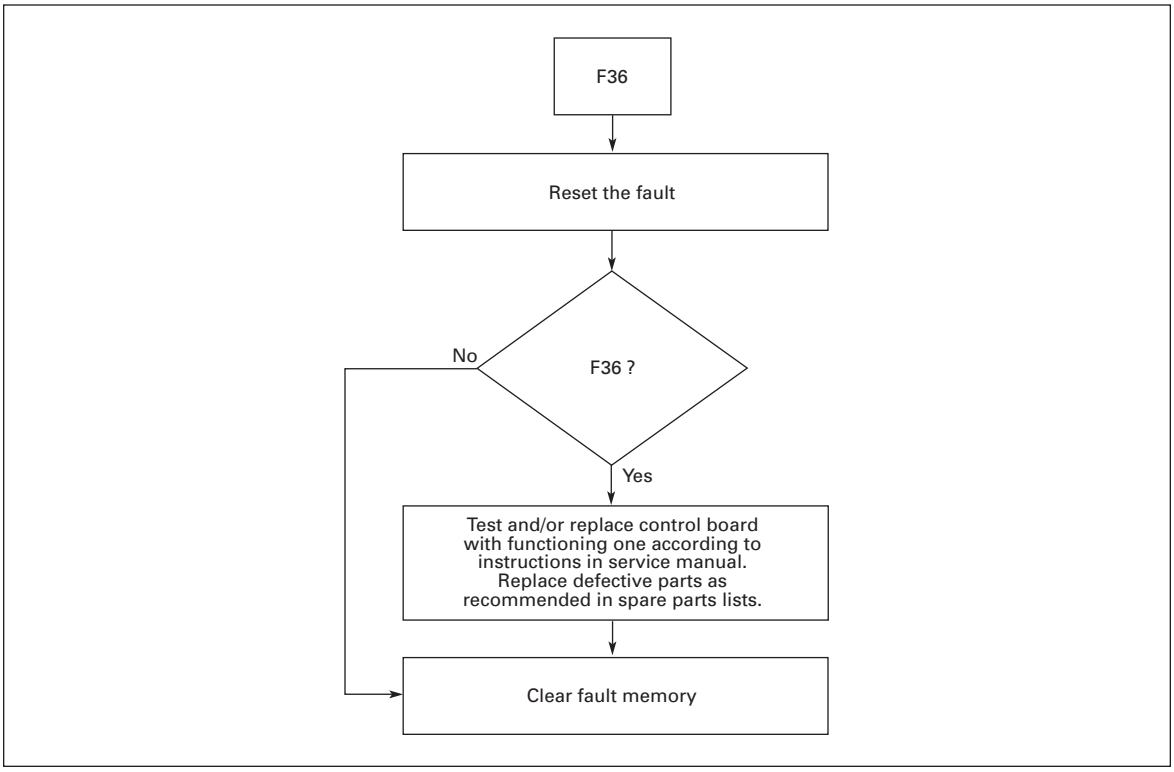

Figure C-22: F36 — Control Unit

F37 — Device Change

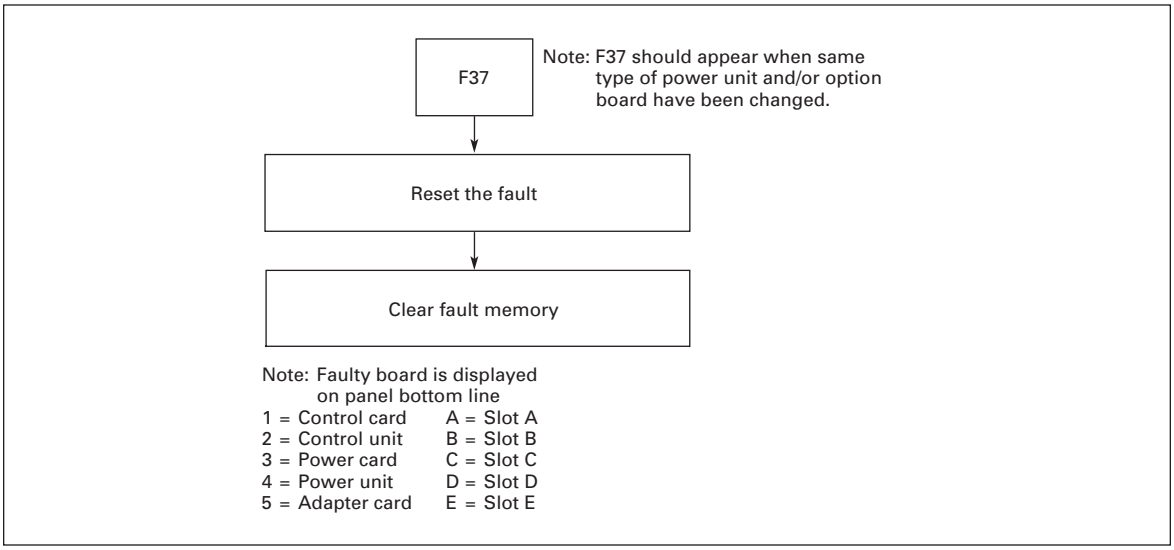

Figure C-23: F37 — Device Change (Indication Only)

F38 — Device Added

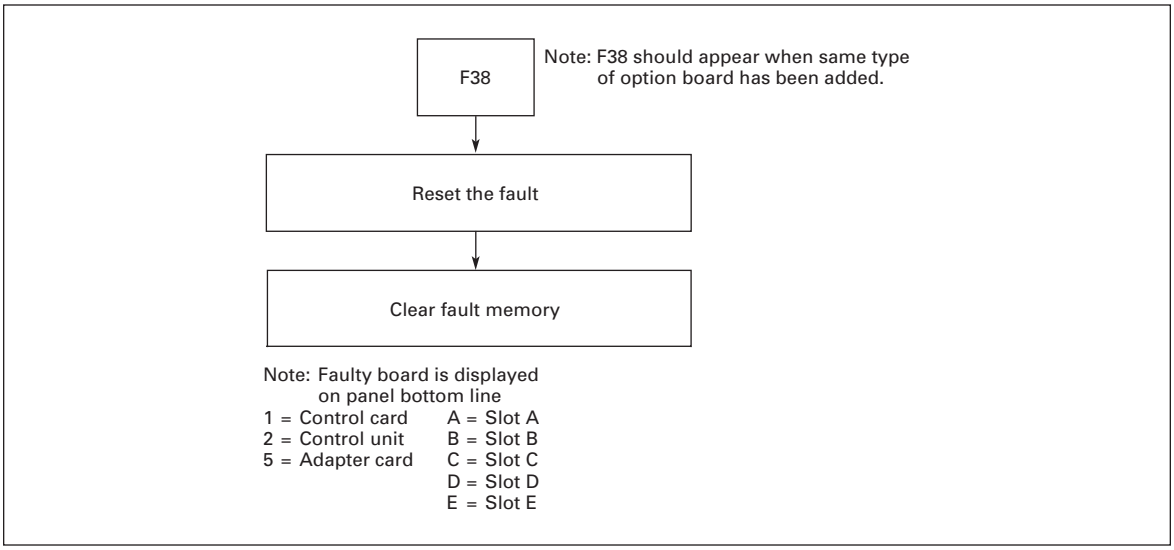

Figure C-24: F38 — Device Added (Indication Only)

F39 — Device Removed

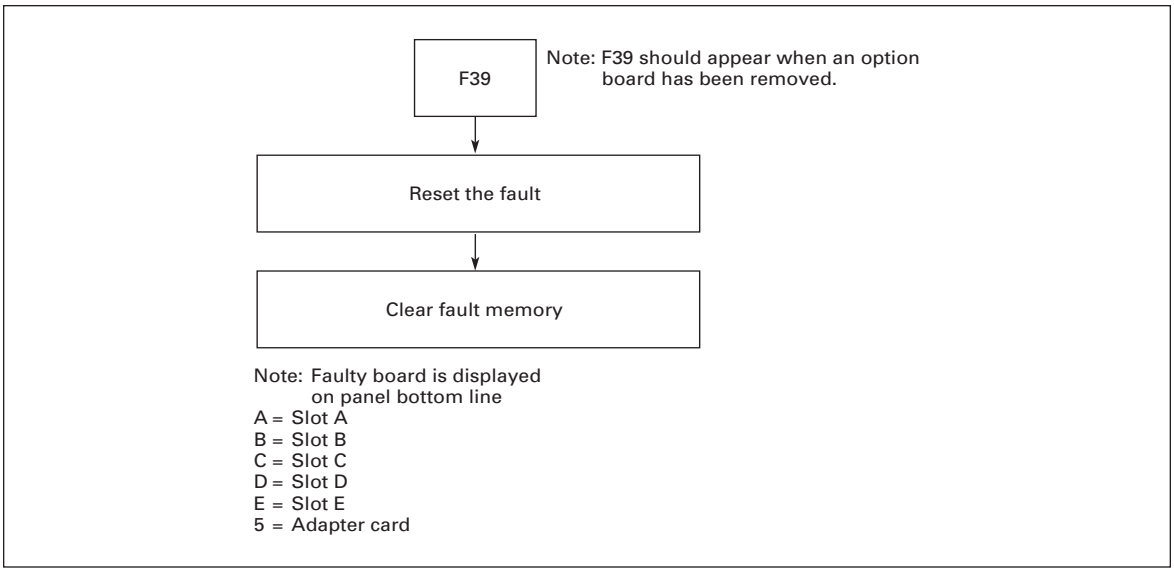

Figure C-25: F39 — Device Removed (Indication Only)

F40 — Device Unknown

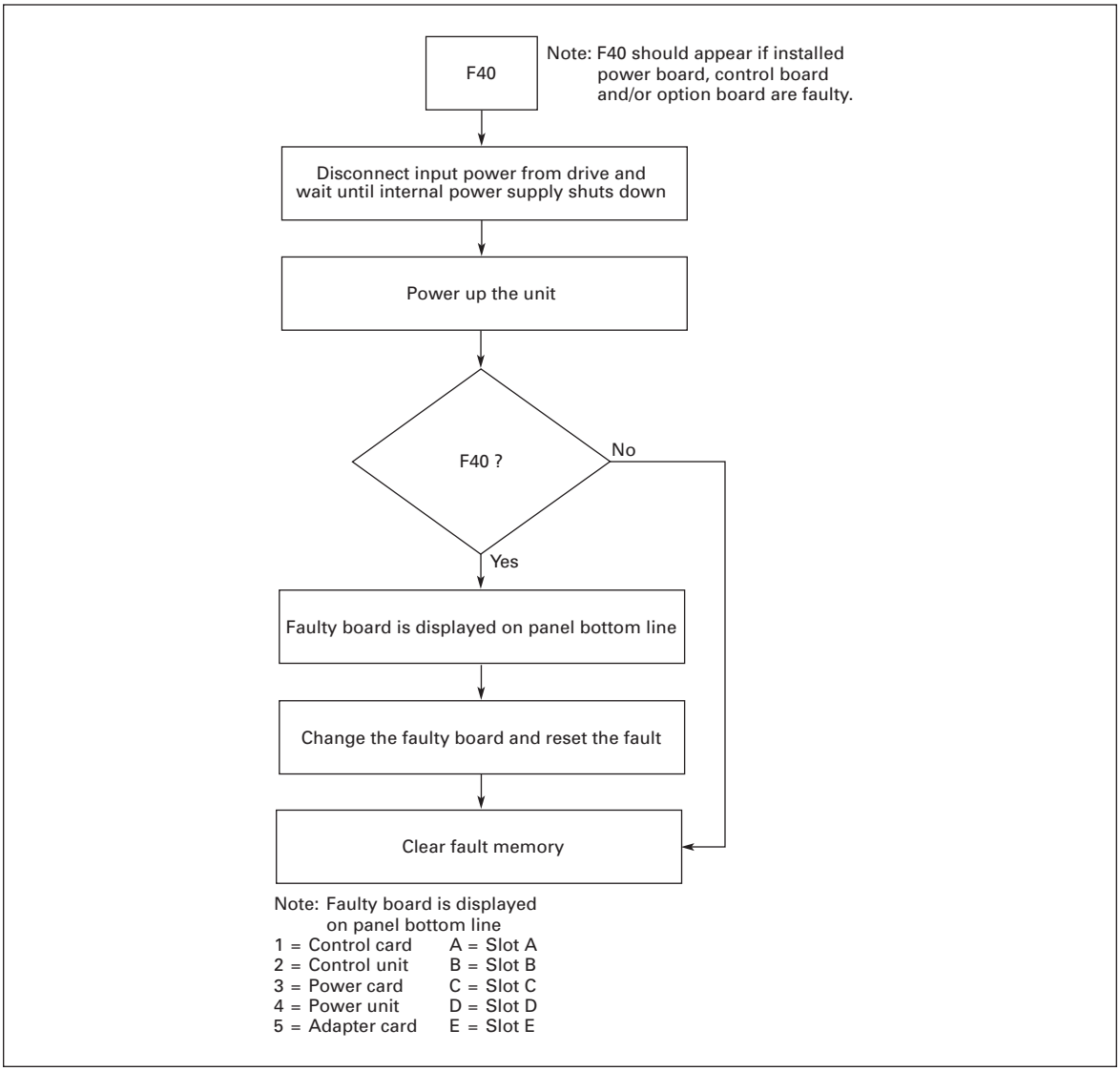

Figure C-26: F40 — Device Unknown

F41 — IGBT Temperature

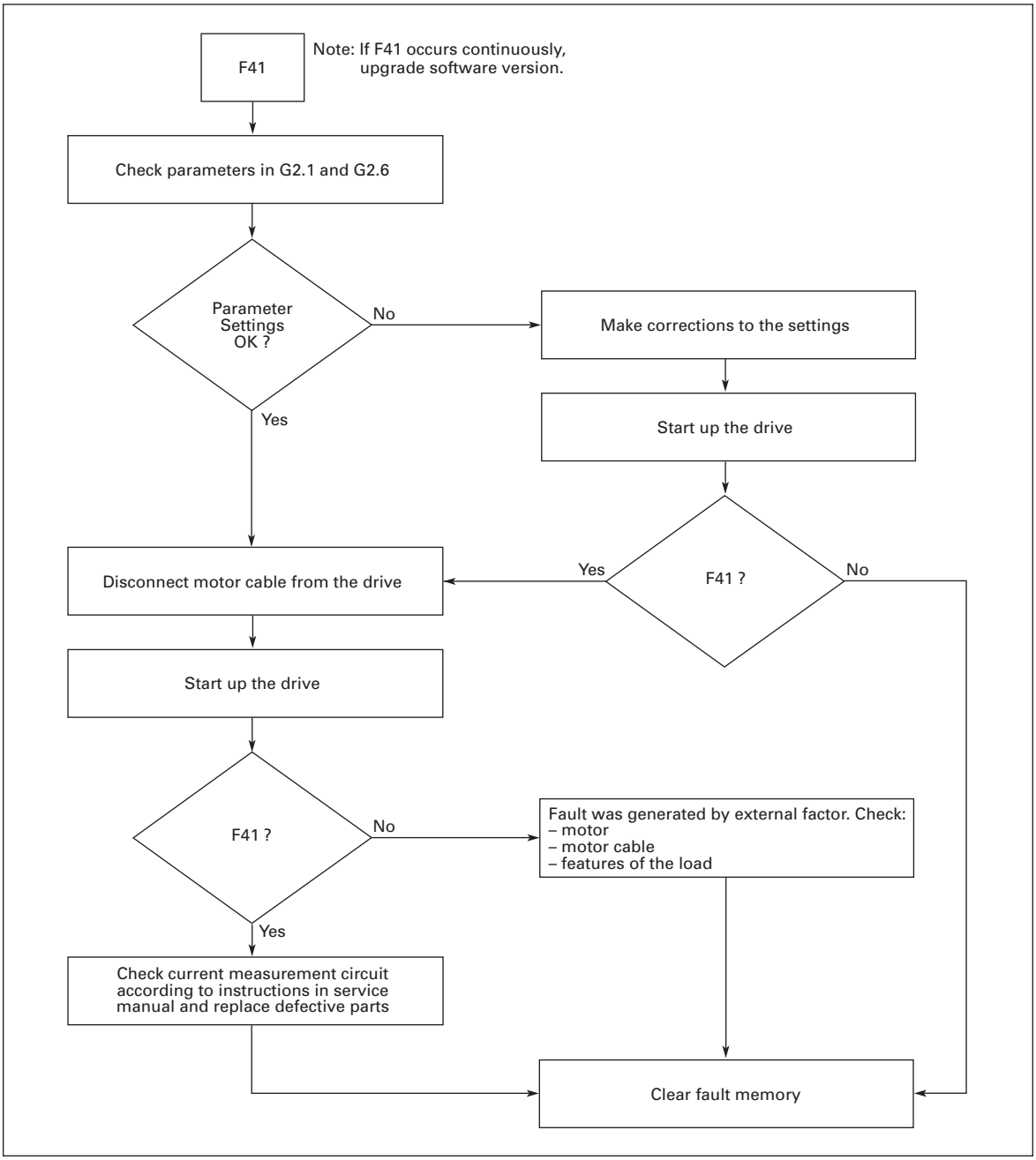

Figure C-27: F41 — IGBT Temperature

F42 — Brake Resistor Over Temperature

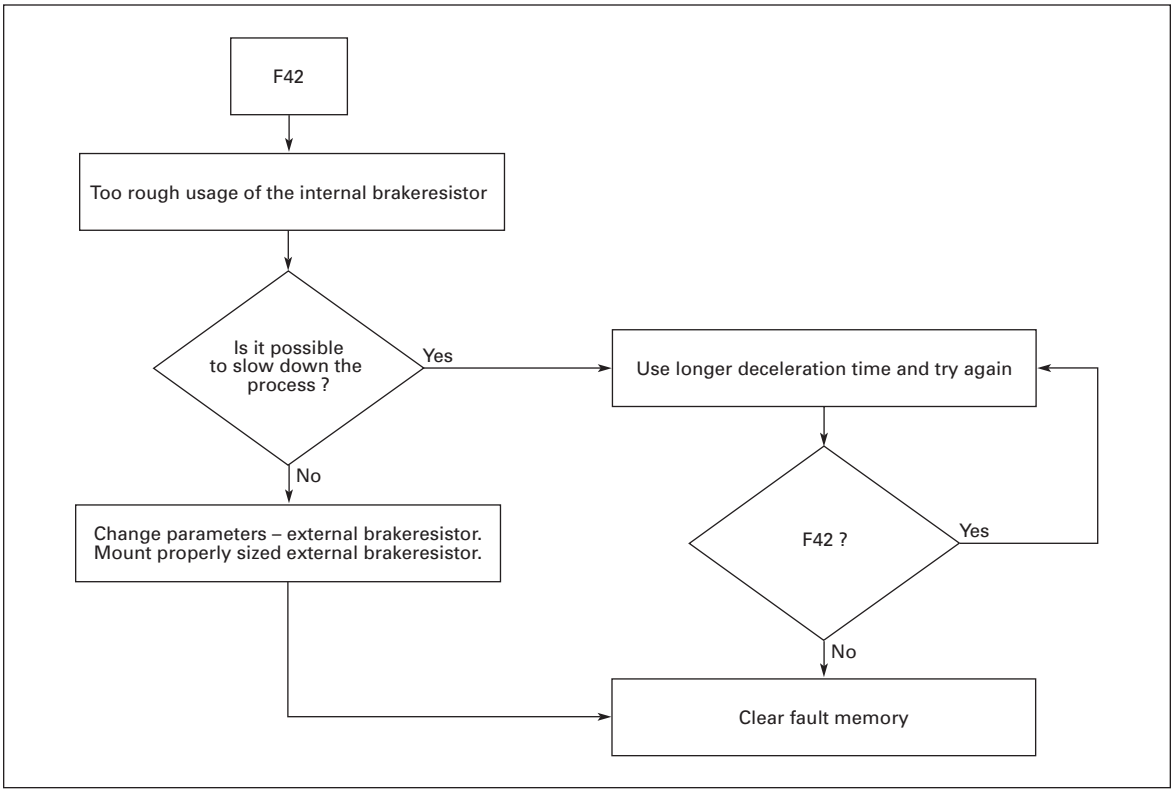

Figure C-28: F42 — Brake Resistor Over Temperature

F44 — DevParChange

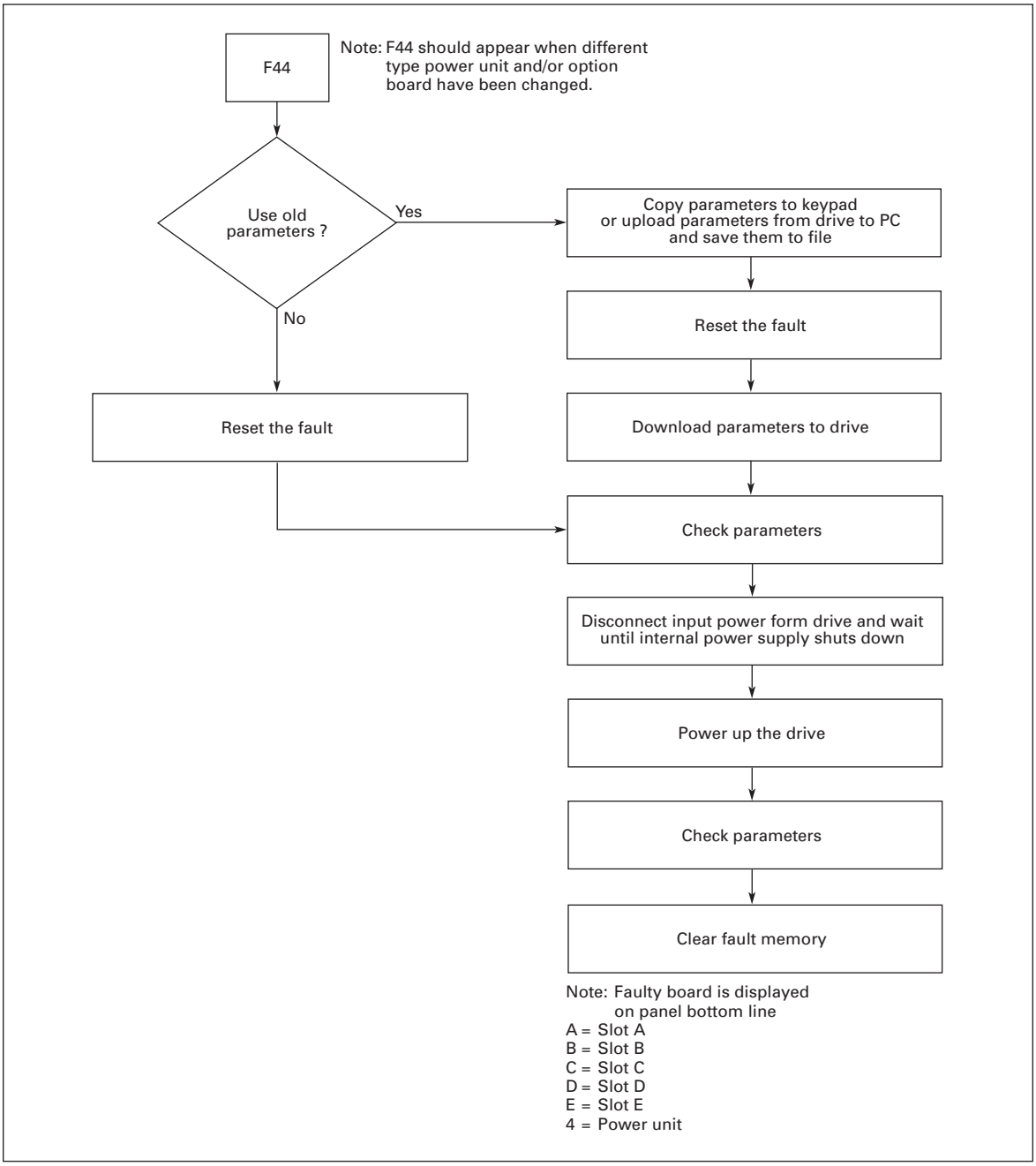

Figure C-29: F44 — DevParChange

F45 — DevParAdded

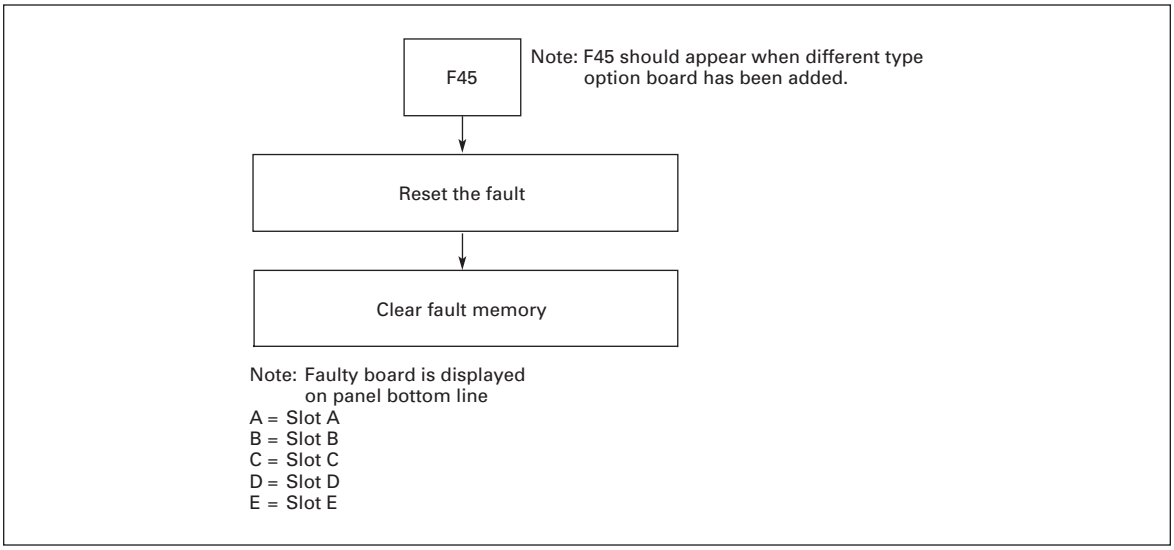

Figure C-30: F45 — DevParAdded

F50 — Analog Input I_{in} < 4 mA

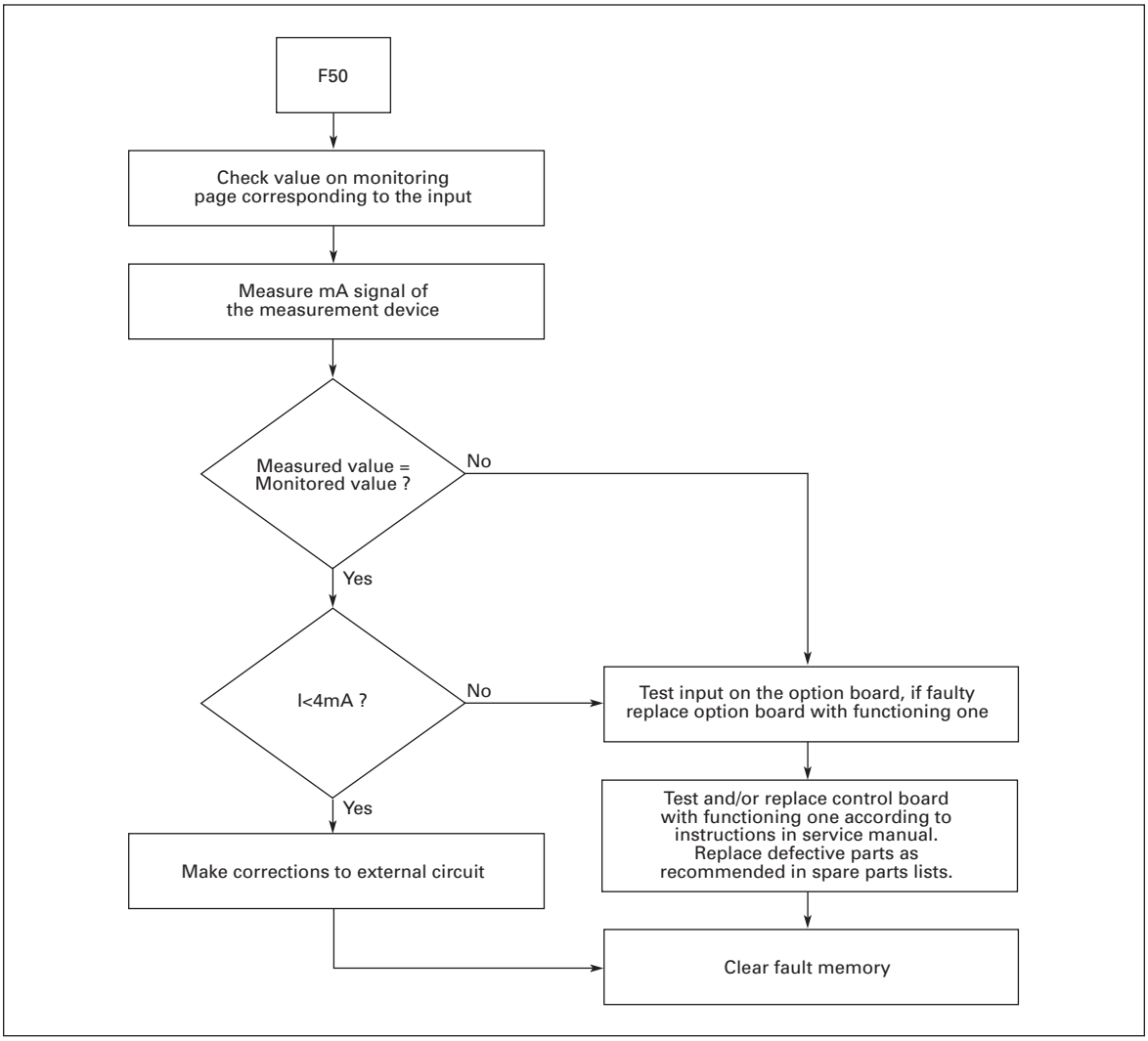

Figure C-31: F50 — Analog Input I_{in} < 4 mA

F51 — External Fault

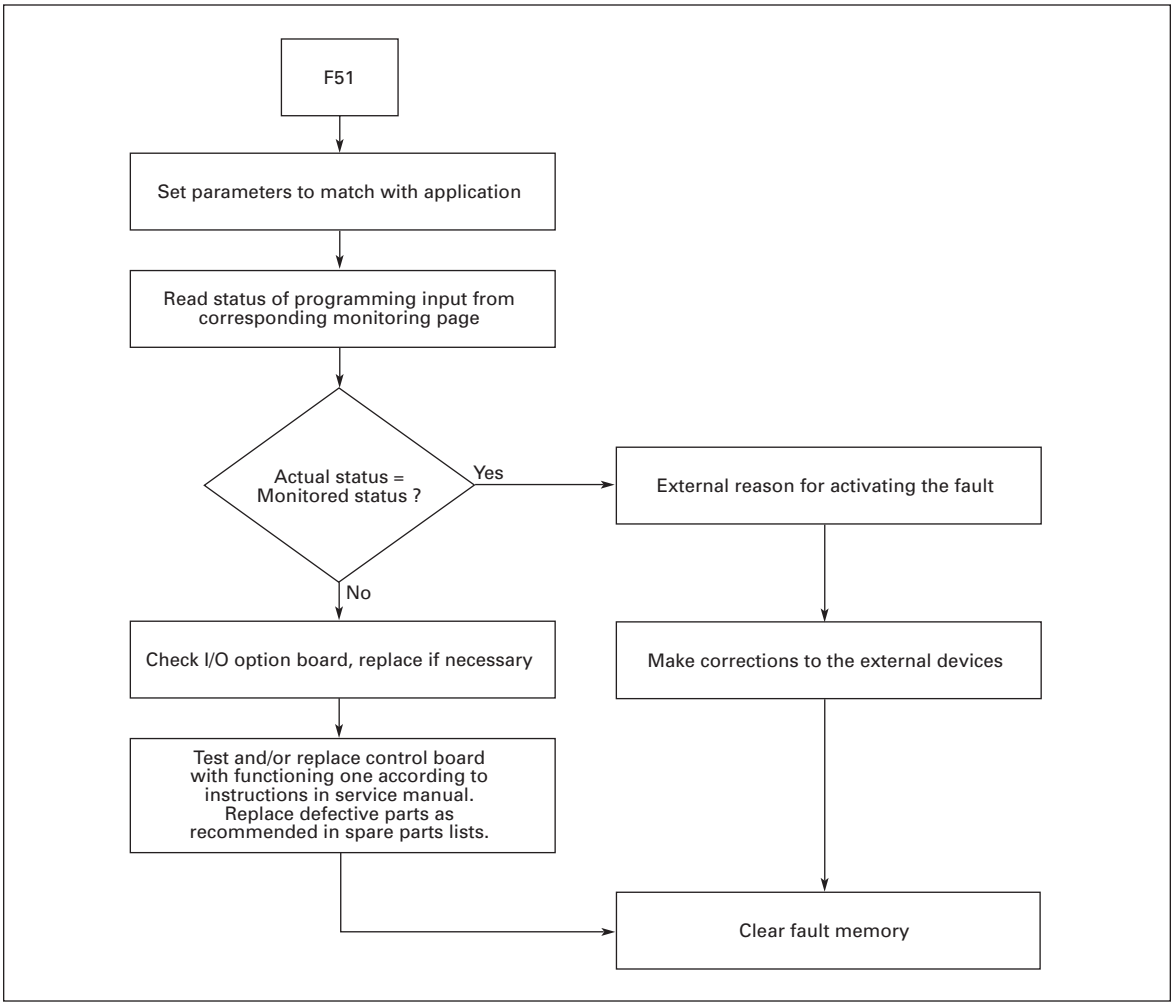

Figure C-32: F51 — External Fault

F52 — Keypad Communication Fault

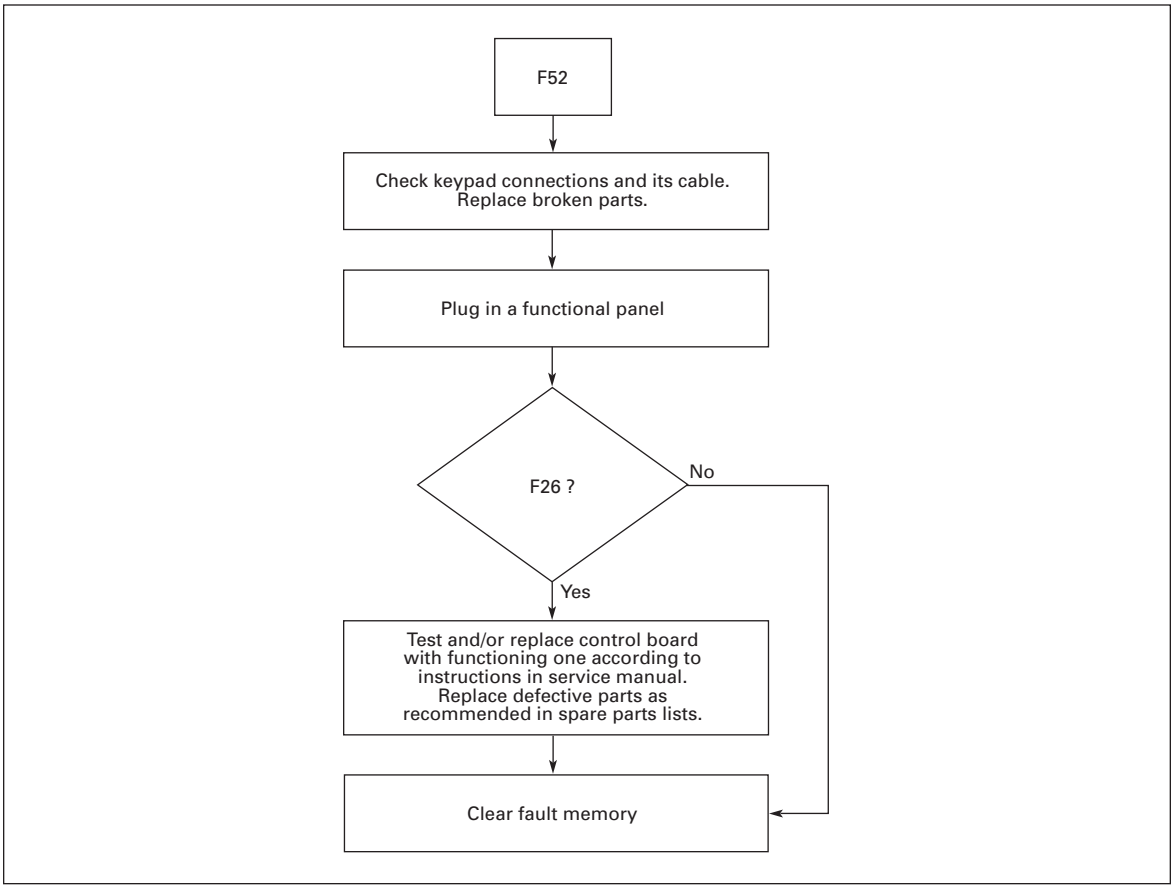

Figure C-33: F52 — Keypad Communication Fault

October 2007

Appendix D — Spare Parts

Series Option Board Kits

The 9000X Series drives can accommodate a wide selection of expander and adapter option boards to customize the drive for your application needs. The drive's control unit is designed to accept a total of five option boards (see **Figure D-1**).

The 9000X Series factory installed standard board configuration includes an A9 I/O board and an A2 relay output board, which are installed in slots A and B.

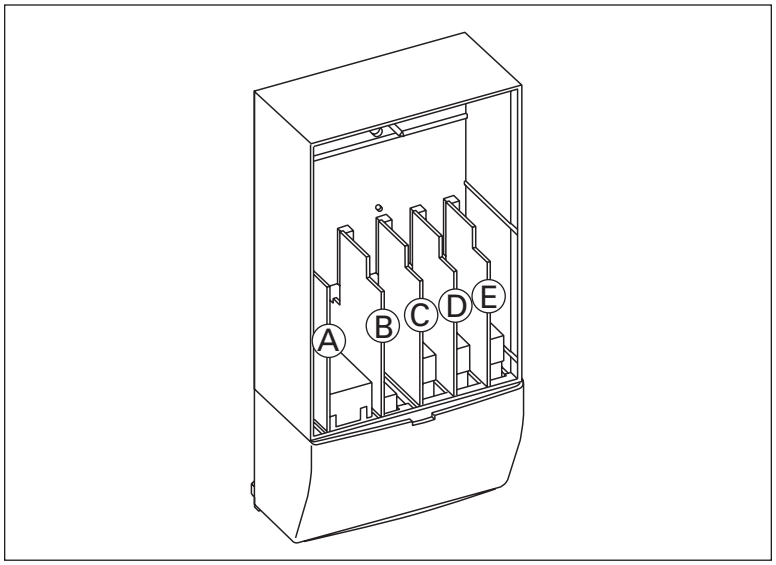

Figure D-1: 9000X Series Option Boards

Table D-1: Option Board Kits

Option Kit Description ②	Allowed Slot Locations ①	Field Installed	Factory Installed	9000X Ready Programs						
		Catalog Number	Option Designator	Basic	Local/ Remote	Standard	MSS	PID	Multi-P.	PFC
Standard I/O Cards (See Figure D-1)										
2 RO (NC/NO)	B	**OPTA2**	**—**	X	X	X	X	X	X	X
6 DI, 1 DO, 2 AI, 1AO, 1 +10V DC ref, 2 ext +24V DC/ EXT +24V DC	A	**OPTA9**	**—**	X	X	X	X	X	X	X
Extended I/O Card Options										
2 RO, Therm	B	**OPTA3**	**A3**	—	X	X	X	X	X	X
Encoder low volt +5V/15V24V	C	**OPTA4**	**A4**	—	X	X	X	X	X	X
Encoder high volt +15V/24V	C	**OPTA5**	**A5**	—	X	X	X	X	X	X
Double encoder — SPX Only	C	**OPTA7**	**A7**	X	X	X	X	X	X	X
6 DI, 1 DO, 2 AI, 1 AO	A	**OPTA8**	**A8**	—	X	X	X	X	X	X
3 DI (Encoder 10 – 24V), Out +15V/+24V, 2 DO (pulse+direction) — SPX Only	C	**OPTAE**	**AE**	X	X	X	X	X	X	X

① Option card must be installed in one of the slots listed for that card. Slot indicated in Bold is the preferred location.
② AI = Analog Input; AO = Analog Output, DI = Digital Input, DO = Digital Output, RO = Relay Output

Table D-1: Option Board Kits (Continued)

Option Kit Description ②	Allowed Slot Locations ①	Field Installed Catalog Number	Factory Installed Option Designator	9000X Ready Programs Basic	Local/ Remote	Standard	MSS	PID	Multi-P.	PFC
Extended I/O Card Options (Continued)										
6 DI, 1 ext +24V DC/EXT +24V DC	B, C, **D**, E	**OPTB1**	**B1**	—	—	—	—	—	X	X
1 RO (NC/NO), 1 RO (NO), 1 Therm	B, C, **D**, E	**OPTB2**	**B2**	—	—	—	—	—	X	X
1 AI (mA isolated), 2 AO (mA isolated), 1 ext +24V DC/ EXT +24V DC	B, C, **D**, E	**OPTB4**	**B4**	—	X	X	X	X	X	X
3 RO (NO)	B, C, **D**, E	**OPTB5**	**B5**	—	—	—	—	—	X	X
1 ext +24V DC/EXT +24V DC, 3 Pt100	B, C, **D**, E	**OPTB8**	**B8**	—	—	—	—	—	—	—
1 RO (NO), 5 DI 42 – 240V AC Input	B,C, **D**, E	**OPTB9**	**B9**	—	—	—	—	—	X	X
SPI, Absolute Encoder	C	**OPTBB**	**BB**	—	—	—	—	—	—	—
Communication Cards ③										
Modbus	D, **E**	**OPTC2**	**C2**	X	X	X	X	X	X	X
Johnson Controls N2	D, **E**	**OPTC2**	**CA**	—	—	—	—	—	—	—
Modbus TCP	D, **E**	**OPTCI**	**CI**	X	X	X	X	X	X	X
BACnet	D, **E**	**OPTCJ**	**CJ**	X	X	X	X	X	X	X
Ethernet IP	D, **E**	**OPTCK**	**CK**	X	X	X	X	X	X	X
Profibus DP	D, **E**	**OPTC3**	**C3**	X	X	X	X	X	X	X
LonWorks	D, **E**	**OPTC4**	**C4**	X	X	X	X	X	X	X
Profibus DP (D9 Connector)	D, **E**	**OPTC5**	**C5**	X	X	X	X	X	X	X
CanOpen (Slave)	D, **E**	**OPTC6**	**C6**	X	X	X	X	X	X	X
DeviceNet	D, **E**	**OPTC7**	**C7**	X	X	X	X	X	X	X
Modbus (D9 Type Connector)	D, **E**	**OPTC8**	**C8**	X	X	X	X	X	X	X
Adapter — SPX Only	D, **E**	**OPTD1**	**D1**	X	X	X	X	X	X	X
Adapter — SPX Only	D, **E**	**OPTD2**	**D2**	X	X	X	X	X	X	X
RS-232 with D9 Connection	D, **E**	**OPTD3**	**D3**	X	X	X	X	X	X	X
Keypad										
9000X Series Local/Remote Keypad (Replacement Keypad)	—	**KEYPAD-LOC/REM**	**—**	—	—	—	—	—	—	—
9000X Series Remote Mount Keypad Unit (Keypad not included, includes 10 ft. cable, keypad holder, mounting hardware)	—	**OPTRMT-KIT-9000X**	**—**	—	—	—	—	—	—	—
9000X Series RS-232 Cable, 13 ft.	—	**PP00104**	**—**	—	—	—	—	—	—	—

① Option card must be installed in one of the slots listed for that card. Slot indicated in Bold is the preferred location.
② AI = Analog Input; AO = Analog Output, DI = Digital Input, DO = Digital Output, RO = Relay Output
③ OPTC2 is a multi-protocol option card.

Johnson Controls Metasys™ N2 Network Communications

The OPTC2 fieldbus board provides communication between the 9000X Drive and a Johnson Controls Metasys™ N2 network. With this connection, the drive can be controlled, monitored and programmed from the Metasys system. The N2 fieldbus is available as a factory installed option and as a field installable kit.

Modbus/TCP Network Communications

The Modbus/TCP Network Card OPTCI is used for connecting the 9000X Drive to Ethernet networks utilizing Modbus protocol. It includes an RJ-45 pluggable connector. This interface provides a selection of standard and custom register values to communicate drive parameters. The board supports 10 Mbps and 100 Mbps communication speeds. The IP address of the board is configurable over Ethernet using a supplied software tool.

BACnet Network Communications

The BACnet Network Card OPTCJ is used for connecting the 9000X Drive to BACnet networks. It includes a 5.08 mm pluggable connector. Data transfer is Master-Slave/Token Passing (MS/TP) RS-485. This interface uses a collection of 30 Binary Value Objects (BVOs) and 35 Analog Value Objects (AVOs) to communicate drive parameters. The card supports 9.6, 19.2 and 38.4 Kbaud communication speeds and supports network addresses 1 – 127.

Ethernet/IP Network Communications

The Ethernet/IP Network Card OPTCK is used for connecting the 9000X Drive to Ethernet/ Industrial Protocol networks. It includes an RJ-45 pluggable connector. The interface uses CIP objects to communicate drive parameters (CIP is “Common Industrial Protocol”, the same protocol used by DeviceNet). The board supports 10 Mbps and 100 Mbps communication speeds. The IP address of the board is configurable by Static, BOOTP and DHCP methods.

Modbus RTU Network Communications

The Modbus Network Card OPTC2 is used for connecting the 9000X Drive as a slave on a Modbus network. The interface is connected by a 9-pin DSUB connector (female) and the baud rate ranges from 300 to 19200 baud. Other communication parameters include an address range from 1 to 247; a parity of None, Odd or Even; and the stop bit is 1.

Profibus Network Communications

The Profibus Network Card OPTC3 is used for connecting the 9000X Drive as a slave on a Profibus-DP network. The interface is connected by a 9-pin DSUB connector (female). The baud rates range from 9.6K baud to 12M baud, and the addresses range from 1 to 127.

LonWorks Network Communications

The LonWorks Network Card OPTC4 is used for connecting the 9000X Drive on a LonWorks network. This interface uses Standard Network Variable Types (SNVT) as data types. The channel connection is achieved using a FTT-10A Free Topology transceiver via a single twisted transfer cable. The communication speed with LonWorks is 78 kBits/s.

CanOpen (Slave) Communications

The CanOpen (Slave) Network Card OPTC6 is used for connecting the 9000X Drive to a host system. According to ISO11898 standard cables to be chosen for CAN bus should have a nominal impedance of 120Ω, and specific line delay of nominal 5 nS/m. 120Ω line termination resistors required for installation.

DeviceNet Network Communications

The DeviceNet Network Card OPTC7 is used for connecting the 9000X Drive on a DeviceNet Network. It includes a 5.08 mm pluggable connector. Transfer method is via CAN using a 2-wire twisted shielded cable with 2-wire bus power cable and drain. The baud rates used for communication include 125K baud, 250K baud and 500K baud.

Drive Options

Control Panel Options

Table D-2: Control Panel Factory Options

Description	Factory Installed	Field Installed NEMA Type 1
	Option Code	Catalog Number
Local/Remote Keypad SVX9000 Control Panel — This option is standard on all drives and consists of an RS-232 connection, backlit alphanumeric LCD display with nine indicators for the RUN status and two indicators for the control source. The nine pushbuttons on the panel are used for panel programming and monitoring of all 9000X parameters. The panel is detachable and isolated from the input line potential. Include LOC/REM key to choose control location.	**A**	**KEYPAD-LOC/REM**
Keypad Remote Mounting Kit — This option is used to remote mount the 9000X keypad. The footprint is compatible to the SV9000 remote mount kit. Includes 10 ft. cable, keypad holder and mounting hardware.	**—**	**OPTRMT-KIT-9000X**
Keypad Blank — 9000X Series select keypad for use with special and custom applications.	**—**	**KEYPAD-BLANK**
9000XDrive — A PC-based tool for controlling and monitoring of the 9000X. Features include: loading parameters that can be saved to a file or printed, setting references, starting and stopping the motor, monitoring signals in graphical or text form, and real-time display. To avoid damage to the drive or computer, SVDrivecable must be used.	**—**	**9000XDRIVE**
SVDrivecable — 6 ft. (1.8m) RS-232 cable (22 gauge) with a 7-pin connector on each end. Should be used in conjunction with the 9000X Drive option to avoid damage to the drive or computer. The same cable can be used for downloading specialized applications to the drive.	**—**	**SVDRIVECABLE**

October 2007

Spare Units & Replacement Parts for 9000X Drives

Table D-3: 9000X Spare Units

Description	Catalog Number
Control Unit – Includes the control board, blue base housing, installed 9000X software program and blue flip cover. Does not include any OPT boards or keypad. See **Figure D-1** and **Table D-1** (**Page D-1**) for standard and option boards and keypad.	**CSBS0000000000** (for SVX) **CPBS0000000000** (for SPX)

208 – 240V

Table D-4: Replacement Parts — 9000X Drives, 208 – 240V

Frame:	4					5			6		7			8			Catalog Number
hp (I_H):	3/4	1	1-1/2	2	3	5 ①	5	7-1/2	10	15	20	25	30	40	50	60	
Control Board																	
1	1	1	1	1	1	1	1	1	1	1	1	1	1	1	1	1	**VB00252** (for SVX)
1	1	1	1	1	1	1	1	1	1	1	1	1	1	1	1	1	**VB00561** (for SPX)
Power Boards																	
1																	**VB00308-0004-2**
	1																**VB00308-0007-2**
		1															**VB00308-0008-2**
			1														**VB00310-0011-2**
				1													**VB00310-0012-2**
					1												**VB00313-0017-2**
						1											**VB00313-0025-2**
							1										**VB00313-0031-2**
								1									**VB00316-0048-2**
									1								**VB00316-0061-2**
										1							**VB00319-0075-2**
											1						**VB00319-0088-2**
												1					**VB00319-0114-2**
													1				**VB00322-0140-2**
														1			**VB00322-0170-2**
															1		**VB00322-0205-2**
Electrolytic Capacitors																	
2	2	2															**PP01000**
			2	2													**PP01001**
					2	2											**PP01002**
							2										**PP01003**
								2	2								**PP01004**
										2	2	2	4	4			**PP01005**
																4	**PP01099**

① 5 hp I_L only; has no corresponding I_H rated hp rating.

Table D-4: Replacement Parts — 9000X Drives, 208 – 240V (Continued)

Frame:	4					5			6		7			8			Catalog Number
hp (I_H):	3/4	1	1-1/2	2	3	5 ①	5	7-1/2	10	15	20	25	30	40	50	60	
Cooling Fans																	
	1	1	1	1	1												**PP01060**
						1	1	1									**PP01061**
									1	1							**PP01062**
											1	1	1				**PP01063**
														1	1	1	**PP01123** ②
	1	1	1	1	1												**PP01086**
						1	1	1	1	1							**PP01088**
											1	1	1				**PP01049**
														1	2	2	**CP01180**
														1	1	1	**PP08037**
IGBT Modules																	
	1	1															**CP01304**
			1														**CP01305**
				1	1	1											**CP01306**
							1										**CP01307**
								1									**CP01308**
									1								**PP01022**
										1							**PP01023**
											1						**PP01024**
												1					**PP01025**
													1				**PP01029**
														1			**PP01026**
															1	1	**PP01027**
Choppers/Rectifiers																	
									1								**CP01367**
										1							**CP01368**
Diode/Thyristor Modules																	
											3	3	3				**PP01035**
														3	3	3	**CP01268**
Rectifying Boards																	
											1	1	1				**VB00242**
														1	1	1	**VB00227**

① 5 hp I_L only; has no corresponding I_H rated hp rating.
② PP00061 capacitor not included in main fan; please order separately.

FR4 – FR9, 380 – 500V

Table D-5: Replacement Parts — FR4 – FR9 9000X Drives, 380 – 500V

Frame:	4						5			6			7			8			9		Catalog Number
hp (I_H):	1	1-1/2	2	3	5	7-1/2 ①	7-1/2	10	15	20	25	30	40	50	60	75	100	125	150	200	
Control Board																					
1	1	1	1	1	1	1	1	1	1	1	1	1	1	1	1	1	1	1	1	1	**VB00252** (for SVX)
1	1	1	1	1	1	1	1	1	1	1	1	1	1	1	1	1	1	1	1	1	**VB00561** (for SPX)
Power Boards																					
1																					**VB00208-0003-5**
	1																				**VB00208-0004-5**
		1																			**VB00208-0005-5**
			1																		**VB00208-0007-5**
				1																	**VB00208-0009-5**
					1																**VB00210-0012-5**
						1															**VB00213-0016-5**
							1														**VB00213-0022-5**
								1													**VB00213-0031-5**
									1												**VB00216-0038-5**
										1											**VB00216-0045-5**
											1										**VB00216-0061-5**
												1									**VB00219-0072-5**
													1								**VB00219-0087-5**
														1							**VB00219-0105-5**
															1						**VB00236-0140-5**
																1					**VB00236-0168-5**
																	1				**VB00236-0205-5**
Electrolytic Capacitors																					
2	2	2	2																		**PP01000**
				2	2																**PP01001**
						2	2														**PP01002**
								2													**PP01003**
									2	2	2										**PP01004**
												2	2	2	4	4	4	8	8	**PP01005**
Cooling Fans																					
1	1	1	1	1	1																**PP01060**
						1	1	1													**PP01061**
									1	1	1										**PP01062**
												1	1	1							**PP01063**
															1	1	1				**PP01123** ②
																		1	1		**PP01080** ③

① I_L only; has no corresponding I_H rated hp rating.
② PP00061 capacitor not included in main fan; please order separately.
③ PP00011 capacitor not included in main fan; please order separately.

Table D-5: Replacement Parts — FR4 – FR9 9000X Drives, 380 – 500V (Continued)

Frame:	4						5			6			7			8			9		Catalog Number
hp (I_H):	1	1-1/2	2	3	5	7-1/2 ①	7-1/2	10	15	20	25	30	40	50	60	75	100	125	150	200	
Cooling Fans (Continued)																					
	1	1	1	1	1	1															PP01086
							1	1	1												PP01088
										1	1	1	1	1	1						PP01049
																1	1	1			CP01180
																			1 ②	2	PP01068
																			1	1	PP09051
IGBT Modules																					
	1	1	1																		CP01304
				1	1																CP01305
						1	1														CP01306
								1													CP01307
									1												CP01308
										1	1										PP01022
												1									PP01023
													1								PP01024
														1							PP01025
															1						PP01029
																1					PP01026
																	1	1			PP01027
Chopper/Rectifiers																					
										1	1										CP01367
												1									CP01368
Diode/Thyristor Modules																					
													3	3	3						PP01035
																3	3	3			CP01268
																			3	3	PP01037
Rectifying Boards																					
													1	1	1						VB00242
																1	1	1			VB00227
																			1	1	VB00459
Rectifying Module Sub-assembly																					
																			1	1	FR09810
Power Module Sub-assemblies																					
																			1		FR09-150-4-ANS ③
																				1	FR09-200-4-ANS ③

① I_L only; has no corresponding I_H rated hp rating.
② For FR9 NEMA Type 12 you need two PP01068 internal fans.
③ See **Table D-9** for details.

FR10 – FR12, 380 – 500

Table D-6: Replacement Parts — FR10 – FR12 9000X Drives, 380 – 500V

Frame:	10			11			12			Catalog Number
hp (I_H):	250	300	350	400	500	550	600	650	700	
Control Board										
	1	1	1	1	1	1	1	1	1	**VB00561**
Shunt Boards										
	6									**VB00537**
		6								**VB00497**
			6				12	12	12	**VB00498**
				9						**VB00538**
					9					**VB00513**
						9				**VB00514**
Driver Boards										
				3	3	3				**VB00489**
	1	1	1				2	2	2	**VB00487**
Driver Adapter Board										
	1	1	1				2	2	2	**VB00330**
ASIC Board										
	1	1	1	1	1	1	2	2	2	**VB00451**
Feedback Interface Board										
							2	2	2	**VB00448**
Star Coupler Board										
							1	1	1	**VB00336**
Power Modules										
	1	1	1	2	2	2	2	2	2	**FR10820** ①
	2	2	2							**FR10828**
	1									**FR10-250-4-ANS** ②
		1								**FR10-300-4-ANS** ②
			1				2	2	2	**FR10-350-4-ANS** ②
				3						**FR11-400-4-ANS** ②
					3					**FR11-500-4-ANS** ②
						3				**FR11-550-4-ANS** ②

① Rectifying board not included.
② See **Table D-9** for details.

Table D-6: Replacement Parts — FR10 – FR12 9000X Drives, 380 – 500V (Continued)

Frame:	10			11			12			Catalog Number
hp (I_H):	250	300	350	400	500	550	600	650	700	
Electrolytic Capacitors										
2	2	2	3	3	3	4	4	4	**PP00060**
12	12	12	18	18	18	24	24	24	**PP01005**
Fuses										
1	1	1	1	1	1	2	2	2	**PP01094**
2	2	2	2	2	2	4	4	4	**PP01095**
Cooling Fans and Isolation Transformers										
2	2	2	3	3	3	4	4	4	**VB00299**
2	2	2	3	3	3	4	4	4	**PP01080** ①
2	2	2				4	4	4	**PP01068**
1	1	1	1	1	1	2	2	2	**PP01096**
1	1	1				2	2	2	**FR10844**
1	1	1	3	3	3	2	2	2	**FR10845**
1	1	1				2	2	2	**FR10846**
1	1	1	3	3	3	2	2	2	**FR10847**
Rectifying Board										
1	1	1	2	2	2	2	2	2	**VB00459**

① PP00060 capacitor not included in main fan; please order separately.

FR6 – FR9, 525 – 690V

Table D-7: Replacement Parts — FR6 – FR9 9000X Drives, 525 – 690V

Frame:	6									7		8			9				Catalog Number
hp (I_H):	2	3	5 ①	5	7-1/2	10	15	20	25	30	40	50	60	75	100	125	150	200 ①	
Control Board																			
1	1	1	1	1	1	1	1	1	1	1	1	1	1	1	1	1	1	1	**VB00252** (for SVX)
1	1	1	1	1	1	1	1	1	1	1	1	1	1	1	1	1	1	1	**VB00561** (for SPX)
Driver Board																			
1																			**VB00404-0004-6**
	1																		**VB00404-0005-6**
		1																	**VB00404-0007-6**
			1																**VB00404-0010-6**
				1															**VB00404-0013-6**
					1														**VB00404-0018-6**
						1													**VB00404-0022-6**
							1												**VB00404-0027-6**
								1											**VB00404-0034-6**
Power Boards																			
1	1	1	1	1	1	1	1	1											**VB00414**
									1										**VB00419-0041-6**
										1									**VB00419-0052-6**
											1								**VB00422-0062-6**
												1							**VB00422-0080-6**
													1						**VB00422-0100-6**
Power Modules																			
															1				**FR09-100-5-ANS** ②
																1			**FR09-125-5-ANS** ②
																	1		**FR09-150-5-ANS** ②
																		1	**FR09-175-5-ANS** ②
Electrolytic Capacitors																			
2	2	2	2	2	2	2	2	2											**PP01093**
									2	2	4	4		8	8	8	8		**PP01041**
														4					**PP01040**
Fuses																			
											1	1	1	1	1	1	1		**PP01094**
											2	2	2	2	2	2	2		**PP01095**

① I_L only; has no corresponding I_H rated hp rating.
② See **Table D-9** for details.

Table D-7: Replacement Parts — FR6 – FR9 9000X Drives, 525 – 690V (Continued)

Frame:	6									7		8			9				Catalog Number
hp (I_H):	2	3	5 ①	5	7-1/2	10	15	20	25	30	40	50	60	75	100	125	150	200 ①	
Cooling Fans																			
	1	1	1	1	1														PP01061
						1	1	1	1										PP01062
										1	1								PP01063
												1	1	1					PP01123
	1	1	1	1	1	1	1	1	1	1	1								PP01049
												1	1	1					CP01180
															1	1	1	1 ②	PP01068
															1	1	1	1	PP01080
Fan Power Supply																			
																1	1	1	VB00299
IGBT Modules																			
	3	3	3	3	3	3	3	3	3										PP01091
										1	1								PP01089
												1	1	1					PP01127
IGBT/Diode (Brake)																			
	1	1	1	1	1	1	1	1	1	1	1	2	2	2	2	2	2	2	PP01040
Diode Module																			
	1	1	1	1	1	1	1	1	1										PP01092
Diode/Thyristor Modules																			
										3	3								PP01071
															3	3	3	3	PP01072
Rectifying Boards																			
										1	1								VB00442
															1	1	1	1	VB00460
Rectifying Module Sub-assemblies																			
																1	1	1	FR09810
																1	1	1	FR09811

① I_L only; has no corresponding I_H rated hp rating.
② For NEMA Type 12, two PP01068 internal fans are needed.

FR10 – FR12, 525 – 690V

Table D-8: Replacement Parts — FR10 – FR12 9000X Drives, 525 – 690V

Frame:	10			11			12			Catalog Number
hp (I_H):	200	250	300	400	450	500	550	600	700	
Control Board										
	1	1	1	1	1	1	1	1	1	**VB00561**
Shunt Boards										
	6									**VB00545**
		6								**VB00510**
			6				12	12	12	**VB00511**
				9						**VB00546**
					9					**VB00547**
						9				**VB00512**
Driver Boards										
	1	1	1				2	2	2	**VB00487**
				3	3	3				**VB00489**
Driver Adapter Board										
	1	1	1				2	2	2	**VB00330**
ASIC Board										
	1	1	1	1	1	1	2	2	2	**VB00451**
Feedback Interface Board										
							2	2	2	**VB00448**
Star Coupler Board										
							1	1	1	**VB00336**
Power Modules										
	1	1	1	2	2	2	2	2	2	**FR10821** ①
	2	2	2							**FR10829**
	1									**FR10-200-5-ANS** ②
		1								**FR10-250-5-ANS** ②
			1				2	2	2	**FR10-300-5-ANS** ②
				3						**FR11-400-5-ANS** ②
					3					**FR11-450-5-ANS** ②
						3				**FR11-500-5-ANS** ②
Electrolytic Capacitors										
	2	2	2	3	3	3	4	4	4	**PP00060**
	12	12	12	18	18	18	24	24	24	**PP01099**

① Rectifying board not included.
② See **Table D-9** for details.

Table D-8: Replacement Parts — FR10 – FR12 9000X Drives, 525 – 690V (Continued)

Frame:	10			11			12			Catalog Number
hp (I_H):	200	250	300	400	450	500	550	600	700	
Fuses										
1	1	1	1	1	1	1	2	2	2	**PP01094**
2	2	2	2	2	2	2	4	4	4	**PP01095**
Cooling Fans and Isolation Transformers										
2	2	2	3	3	3	4	4	4		**VB00299**
2	2	2	3	3	3	4	4	4		**PP01080** ①
2	2	2				4	4	4		**PP01068**
1	1	1	1	1	1	2	2	2		**PP01096**
1	1	1				2	2	2		**FR10844**
1	1	1	3	3	3	2	2	2		**FR10845**
1	1	1				2	2	2		**FR10846**
1	1	1	3	3	3	2	2	2		**FR10847**
Fan Power Supply										
						1	1	1		**VB00299**
Rectifying Boards										
1	1	1	2	2	2	2	2	2		**VB00460**

① PP00060 capacitor not included in main fan; please order separately.

Power Module

Table D-9: Power Module Catalog Number Matrix

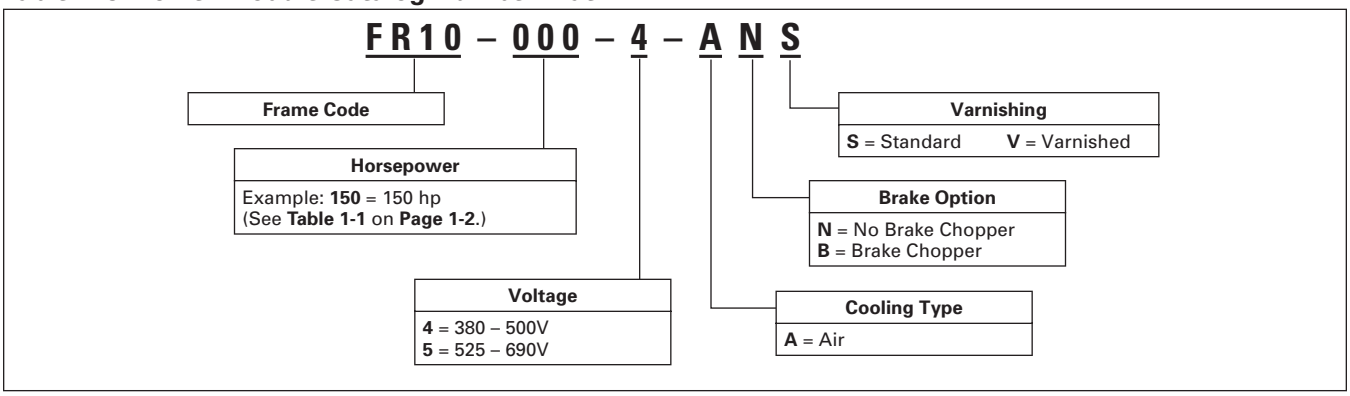

Company Information

Eaton's electrical business is a global leader in electrical control, power distribution, uninterruptible power supply and industrial automation products and services. Eaton's global electrical brands, including Cutler-Hammer®, Powerware®, Holec® and MEM®, provide customer-driven PowerChain Management™ solutions to serve the power system needs of the industrial, institutional, government, utility, commercial, residential, IT, mission critical and OEM markets worldwide.

Eaton Corporation is a diversified industrial manufacturer with 2006 sales of $12.4 billion. Eaton is a global leader in electrical systems and components for power quality, distribution and control; fluid power systems and services for industrial, mobile and aircraft equipment; intelligent truck drivetrain systems for safety and fuel economy; and automotive engine air management systems, powertrain solutions and specialty controls for performance, fuel economy and safety. Eaton has 62,000 employees and sells products to customers in more than 125 countries. For more information, visit **www.eaton.com**.

Eaton Corporation
Electrical Group
1000 Cherrington Parkway
Moon Township, PA 15108
United States
877-ETN CARE (877-386-2273)
Eaton.com

EATON | Cutler-Hammer

© 2007 Eaton Corporation
All Rights Reserved
Printed in USA
Publication No. MN04001004E/CPG
October 2007

Extruded Aluminum Pictogram Sign

WARNING:
Risk of Shock.
Disconnect Power before Installation.

IMPORTANT SAFEGUARDS

When using electrical equipment, basic safety precautions should always be followed including the following:

READ AND FOLLOW ALL SAFETY INSTRUCTIONS

1. All servicing should be performed by qualified service personnel.
2. Do not use outdoors.
3. Do not let power supply cords touch hot surfaces.
4. Do not mount near gas or electric heaters.
5. Use caution when handling batteries. Avoid possible shorting.
6. Equipment should be mounted in locations and at heights where it will not readily be subjected to tampering by unauthorized personnel.
7. The use of accessory equipment not recommended by the manufacturer may cause an unsafe condition.
8. Do not use this equipment for other than intended use.

SAVE THESE INSTRUCTIONS

Installation Instructions

1. Turn off AC power.
2. Route AC circuit of rated voltage into the junction box and leave 6” wire length.
3. Remove face plate from frame by sliding the face plate upwards and pivoting the bottom outwards.
4. Install the appropriate pictogram panel into the faceplate by inserting the top of the panel into the groove of the faceplate then insert the bottom of the panel into the bottom groove of the faceplate (see Figure 2).
5. Do the same for the opal diffuser.
6. Follow the proper mounting procedure below.

Wall mounting

a. Knock out the proper hole pattern in the back plate to mount to a standard junction box. Place a support on either side of the knockout to be removed and then knock out with a screwdriver.
b. Feed AC supply leads, and DC leads if applicable, through the center hole.
c. Mount the unit securely to the junction box using the junction box screws (see Figure 3).

Ceiling or End mounting (with canopy)

a. Determine desired mounting orientation of sign.
b. Remove the proper knockouts in the frame for the canopy with a hammer and screwdriver. The knockouts are located on the side for end mount and the top for ceiling mount.

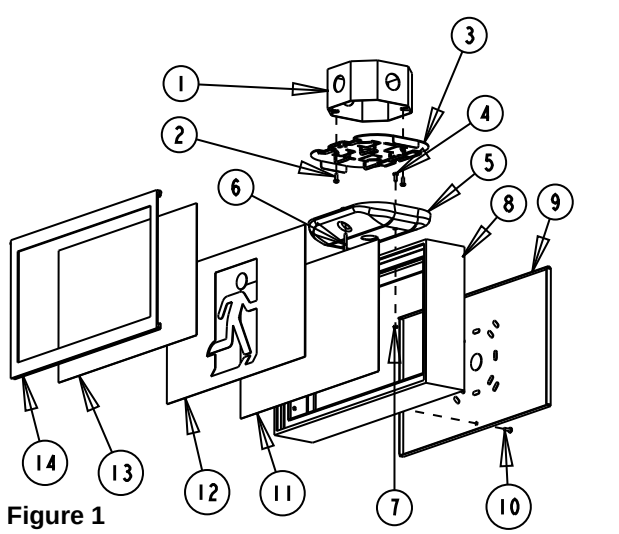

Figure 1

Parts List

1. Junction box
2. Junction box screw (not provided)
3. Spider plate
4. Screw #8-32 SHORT (2)
5. Canopy
6. Screw #8-32 LONG
7. Keps nuts #8-32 (2)
8. Frame
9. Backplate
10. Backplate screw
11. Opal diffuser
12. Pictogram panel
13. Clear panel
14. Faceplate

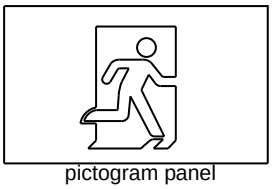
pictogram panel

Install the panel with the person going to the right.

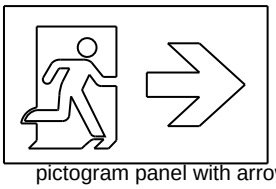
pictogram panel with arrow

Flip the panel for arrow left (below)

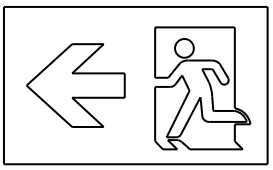
Figure 2

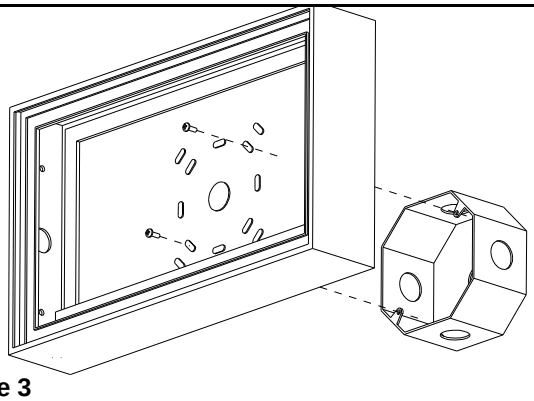
Figure 3

c. Fasten the canopy to the frame using #8-32 Short screws and keps nuts provided (see Figure 1).
d. Route AC wires, and DC wires, if applicable, through the large hole of the frame canopy assembly.
e. Use the cable tie mounting base and ty rap® (provided) to position the wires so that there will be no interference with the panels.
f. Connect the green ground wire to the service ground or the ground connection in the junction box.
g. Fasten the spider plate to the junction box using the junction box screws. Align two threaded holes in the spider plate to line up with the canopy holes on the frame canopy assembly for correct mounting position, end or ceiling.
h. The “Quick-install” canopy is equipped with ribs allowing you to hang the unit to the spider plate to facilitate wiring (See Figure 4).

7. Make the proper wire connections. On the standard universal model, our unit accepts an input voltage of 120 VAC to 347 VAC (see Figure 5).
   a. Connect neutral to (white wire). Connect AC line to (purple wire).
   b. Insulate all unused wires.
   c. Feed excess wire into the junction box.
8. For remote powered DC units, connect the red wire to the positive of the DC supply and the blue to the negative (6 to 24 VDC).
9. Secure the canopy unit assembly to the spider plate using the long screw provided (6).
10. Re-install the faceplate with pictogram panel assembly.
11. Turn on AC supply. The legend will light.

AC/DC Models

Refer to Figure 5 for AC or DC wiring.
For DC portion Wire the Red lead (+) to the positive DC input voltage and the Blue lead (-) to the negative DC input voltage. Note: DC input voltage range is 6 volts to 24 volts.

Manual Testing (self-powered models)

Operate test switch, the pilot light will turn off and LED strip will flicker. Release test switch, LED strip will flicker again and pilot light will be illuminated. If LED strip appears dim or does not light up on test, leave AC connected for at least 15 minutes and re-test. If still incorrect, contact a serviceman or the factory for assistance.

Automatic testing and diagnostics (optional)

A built in micro-controller will self-test the unit and identify display failures of the unit on a monthly basis and identifies as well as displays failures of the electrical components: battery, battery charger and LEDs.
Self-test
The self-test is performed every 30 days for 1 minute, every 6 months for 30 minutes, and annually for 90 minutes.
Diagnostic function
The diagnostic function uses a bi-color pilot LED indicator. Service is required if the LED turns red indicating that an alarm condition is detected (see Figures 5 and 6).

Maintenance

None required. Unit should be tested monthly in accordance with safety codes and local codes. If AC supply to the unit is to be disconnected for 2 months or more, the battery must be disconnected (self-powered models only).

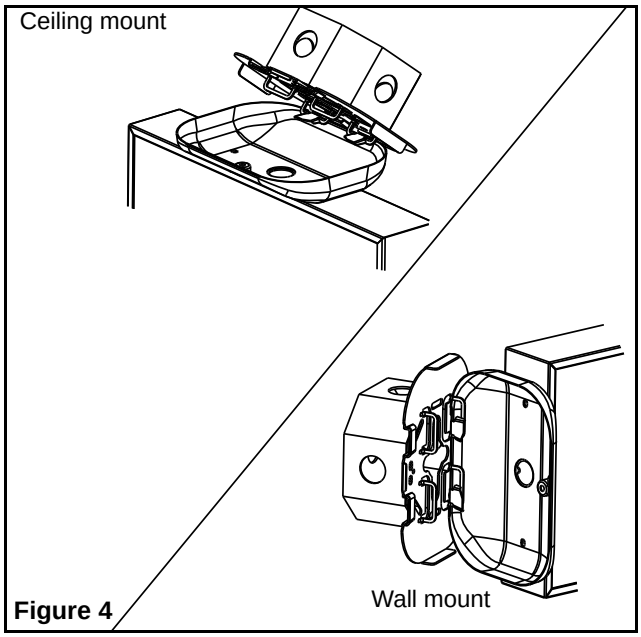

Figure 4

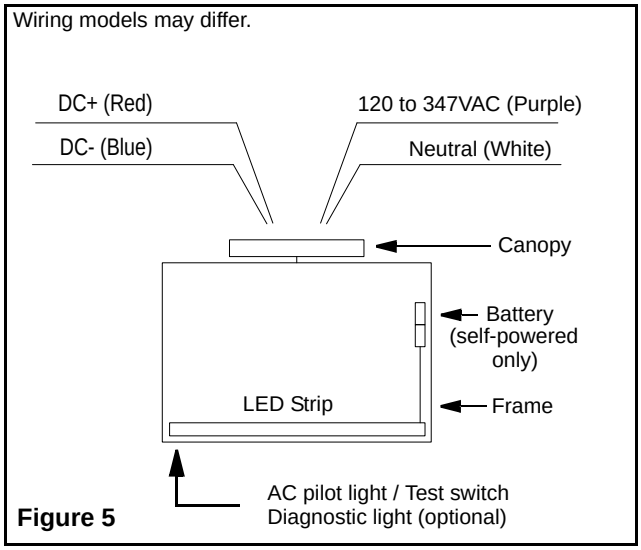

Figure 5

Diagnostic table

O	Green	Steady on	AC on
-O	Green	One Blink	In Test
O	Red	Steady On	Battery Disconnect
-O	Red	One Blink	Battery Failure
O-O	Red	Two Blinks	Charger Failure
O-O-O-O	Red	Four Blinks	LED Strip Failure

Figure 6

Note: (Nickel-Cadmium) batteries are shipped discharged and may require 10 minutes of connection to AC supply before start-up test procedure, and 96 hours to reach full charge.

User Manual

Allen-Bradley

CompactLogix 5370 Controllers

Catalog Numbers 1769-L16ER-BB1B, 1769-L18ER-BB1B, 1769-L18ERM-BB1B, 1769-L24ER-QB1B, 1769-L24ER-QBFC1B, 1769-L27ERM-QBFC1B, 1769-L30ER, 1769-L30ER-NSE, 1769-L30ERM, 1769-L33ER, 1769-L33ERM, 1769-L36ERM

Allen-Bradley • Rockwell Software

Rockwell Automation

Important User Information

Read this document and the documents listed in the additional resources section about installation, configuration, and operation of this equipment before you install, configure, operate, or maintain this product. Users are required to familiarize themselves with installation and wiring instructions in addition to requirements of all applicable codes, laws, and standards.

Activities including installation, adjustments, putting into service, use, assembly, disassembly, and maintenance are required to be carried out by suitably trained personnel in accordance with applicable code of practice.

If this equipment is used in a manner not specified by the manufacturer, the protection provided by the equipment may be impaired.

In no event will Rockwell Automation, Inc. be responsible or liable for indirect or consequential damages resulting from the use or application of this equipment.

The examples and diagrams in this manual are included solely for illustrative purposes. Because of the many variables and requirements associated with any particular installation, Rockwell Automation, Inc. cannot assume responsibility or liability for actual use based on the examples and diagrams.

No patent liability is assumed by Rockwell Automation, Inc. with respect to use of information, circuits, equipment, or software described in this manual.

Reproduction of the contents of this manual, in whole or in part, without written permission of Rockwell Automation, Inc., is prohibited.

Throughout this manual, when necessary, we use notes to make you aware of safety considerations.

	WARNING: Identifies information about practices or circumstances that can cause an explosion in a hazardous environment, which may lead to personal injury or death, property damage, or economic loss.
	ATTENTION: Identifies information about practices or circumstances that can lead to personal injury or death, property damage, or economic loss. Attentions help you identify a hazard, avoid a hazard, and recognize the consequence.
IMPORTANT	Identifies information that is critical for successful application and understanding of the product.

Labels may also be on or inside the equipment to provide specific precautions.

	SHOCK HAZARD: Labels may be on or inside the equipment, for example, a drive or motor, to alert people that dangerous voltage may be present.
	BURN HAZARD: Labels may be on or inside the equipment, for example, a drive or motor, to alert people that surfaces may reach dangerous temperatures.
	ARC FLASH HAZARD: Labels may be on or inside the equipment, for example, a motor control center, to alert people to potential Arc Flash. Arc Flash will cause severe injury or death. Wear proper Personal Protective Equipment (PPE). Follow ALL Regulatory requirements for safe work practices and for Personal Protective Equipment (PPE).

Allen-Bradley, ArmorBlock, Compact I/O, CompactLogix, ControlFLASH, ControlLogix, DriveLogix, FLEX, FLEX I/O, FlexLogix, Kinetix, Logix5000, PanelConnect, PanelView, PLC-5, POINT I/O, POINTBus, PowerFlex, Rockwell Automation, Rockwell Software, RSLinx, RSLogix, RSNetWorx, SLC, SoftLogix, Stratix 2000, Stratix 6000, Studio 5000, Studio 5000 Automation Engineering & Design Environment, and Studio 5000 Logix Designer are trademarks of Rockwell Automation, Inc.

Trademarks not belonging to Rockwell Automation are property of their respective companies.

This manual contains new and updated information. Changes throughout this revision are marked by change bars, as shown to the right of this paragraph.

Topic	Page
Added series B information	Throughout document
Added updated Electronic Keying information	Throughout the document
Addition of Series A appendix	317

The CompactLogix 5370 L1, series B, controller redesign occurred to provide an option to use one external power supply for system power and field side power.

There are differences between the CompactLogix 5370 L1, series A and B, controllers, which are detailed throughout the sections of this manual, as identified by change bars. These differences include the following:

- One external power supply is required for system power and field side power for CompactLogix 5370 L1, series B, controllers
- The label on the side of the controller indicates a CompactLogix 5370 L1, series A or B, controller
- CompactLogix 5370 L1, series B, controllers use an isolated power supply
- CompactLogix 5370 L1, series B, controllers do not require an safety extra-low voltage (SELV) class power supply

Notes:

Preface

Studio 5000 Environment 11
Additional Resources 12

Chapter 1

Install the CompactLogix 5370 L1 Controller

Before You Begin 18
CompactLogix 5370 L1 Controller Parts 21
Installation Summary 21
Install the Secure Digital Card 22
Install the System 24
Mount the System 24
Ground the System 27
Install the Controller 27
Connect Power to the Controller (Series B) 30
Connect to the Controller via a USB Cable 35
Connect the Controller to an EtherNet/IP Network 36
Connecting to Different EtherNet/IP Network Topologies 36

Chapter 2

Install the CompactLogix 5370 L2 Controller

Before You Begin 40
CompactLogix 5370 L2 Controller Parts 41
Installation Summary 41
Install the Secure Digital Card 42
Install the System 44
Mount the System 44
Ground the System 50
Install the Controller 51
Connect Power to the Control System 53
Connect to the Controller via a USB Cable 57
Connect the Controller to an EtherNet/IP Network 58
Connecting to Different EtherNet/IP Network Topologies 58

Chapter 3

Install the CompactLogix 5370 L3 Controller

Before You Begin 62
CompactLogix 5370 L3 Controller Parts 64
Installation Summary 64
Install the Secure Digital Card 65
Install the System 67
Assemble the System 67
Mount the System 70
Ground the System 73
Connect Power to the Control System 75
Connect to the Controller via a USB Cable 76
Connect the Controller to an EtherNet/IP Network 77
Connecting to Different EtherNet/IP Network Topologies 78

Chapter 4

Complete Software Tasks Required at CompactLogix 5370 Controller Installation

Set the IP Address of a Controller 81
- Use the BOOTP Server to Set the IP Address of the Controller . . 83
- Use the DHCP Server to Set the IP Address of the Controller 89
- Use RSLinx Software to Set the IP Address of the Controller 90
- Use the Studio 5000 Environment to Set the IP Address of the Controller 92
- Use the SD Card to Set the IP Address of the Controller 95

Change the IP Address of a Controller 96
- Change the Network IP Address with RSLinx Classic Software . . . 97
- Change the Network IP Address with an SD Card 99

Load the Controller Firmware 100
- Use the ControlFLASH Software to Load Firmware 105
- Use AutoFlash to Load Firmware 110
- Use the Secure Digital Card to Load Firmware 112

Select the Operating Mode of the Controller 113

Chapter 5

CompactLogix 5370 Controllers Overview

CompactLogix 5370 Control System Components 118

Controller Functionality 119
- Support for Integrated Motion over an EtherNet/IP Network . . . 120

Electronic Keying 121
- More Information 121

Example System Configurations 122
- EtherNet/IP Network 122
- DeviceNet Network 124

Chapter 6

Communicate over Networks

EtherNet/IP Network Communication 128
- Available Software 128
- EtherNet/IP Network Functionality on CompactLogix 5370 Controllers 129
- Nodes on an EtherNet/IP Network 130
- EtherNet/IP Network Topologies 132
- Socket Interface with CompactLogix 5370 Controllers 138
- MSG Source Element 141
- Quality of Service (QoS) and I/O Module Connections 142

DeviceNet Network Communication 143
- Available Software 143
- Compact I/O 1769-SDN DeviceNet Scanner 145
- Power Supply Distance Rating 146
- Current Capacity in CompactLogix 5370 L3 Control Systems . . 150

Chapter 7

Use I/O Modules with CompactLogix 5370 L1 Controllers

Select I/O Modules 151
- Connect Field Power to I/O Devices Connected to a CompactLogix 5730 L1 Control System 152
- Embedded I/O Modules 157
- Local Expansion Modules 166
- Distributed I/O Modules over an EtherNet/IP Network 169

Validate I/O Layout 170
- Set the Number of Local Expansion Modules 170
- Empty Slots and Removal and Insertion Under Power Situations 171
- Estimate Requested Packet Interval 172
- Module Faults Related to RPI Estimates 173
- Calculate System Power Consumption 174
- Physical Placement of I/O Modules 174

Use the Event Task 175

Configure I/O 179
- Common Configuration Parameters 180
- I/O Connections 181

Configure Distributed I/O Modules on an EtherNet/IP Network . . 181

Monitor I/O Modules 184
- Bus Off Detection and Recovery 187

Chapter 8

Use I/O Modules with CompactLogix 5370 L2 Controllers

Select I/O Modules 189
- Embedded I/O Modules 190

Determine Embedded Module Update Time 203
- Channel Update Times 203

Embedded Analog I/O Modules Data Arrays 209
- Input Array 209
- Output Array 211
- Configuration Array 212
- Local Expansion Modules - Optional 220
- Distributed I/O Modules over an EtherNet/IP Network 221
- Distributed I/O Modules over a DeviceNet Network 222

Validate I/O Layout 223
- Estimate Requested Packet Interval 223
- Module Fault Related to RPI Estimates 225
- System Power Availability 225
- Power Supply Distance Rating 226

Configure Local I/O Modules 229
- Configure Embedded I/O Modules 229
- Configure Local Expansion Modules 230
- Common Configuration Parameters 231
- I/O Connections 232

Configure Distributed I/O Modules on an EtherNet/IP Network . . 232

Configure Distributed I/O Modules on a DeviceNet Network 236

Monitor I/O Modules 238
End Cap Detection and Module Faults 240

Use I/O Modules with CompactLogix 5370 L3 Controllers

Chapter 9

Select I/O Modules 241
Local Expansion Modules 242
Distributed I/O Modules over an EtherNet/IP Network 244
Distributed I/O Modules over a DeviceNet Network 245
Validate I/O Layout 246
Estimate Requested Packet Interval 246
Module Fault Related to RPI Estimates 248
Calculate System Power Consumption 249
Physical Placement of I/O Modules 252
Power Supply Distance Rating 255
Configure I/O 257
Common Configuration Parameters 258
I/O Connections 258
Configure Distributed I/O Modules on an EtherNet/IP Network . . . 259
Configure Distributed I/O Modules on a DeviceNet Network 262
Monitor I/O Modules 264
End Cap Detection and Module Faults 265

Develop Applications

Chapter 10

Elements of a Control Application 267
Tasks 268
Task Priority 271
Programs 272
Scheduled and Unscheduled Programs 273
Routines 274
Tags 275
Extended Properties 276
Access Extended Properties in Logic 276
Programming Languages 278
Add-On Instructions 279
Access the Module Object 280
Create the Add-On Instruction 280
Monitoring Controller Status 281
Monitoring I/O Connections 282
Determine if I/O Communication has Timed Out 283
Determine if I/O Communication to a Specific I/O Module has Timed Out 283
Interrupt the Execution of Logic and Execute the Fault Handler . 284
System Overhead Time Slice 285
Configure the System Overhead Time Slice 286
Sample Controller Projects 287

Develop Integrated Motion over an EtherNet/IP Network Application

Chapter 11

Motion Axes Support 290
AXIS_VIRTUAL Axis 290
AXIS_CIP_DRIVE Axis 290
Maximum Number of Position Loop-configured Drives 291
Position Loop-configured Drive Limits 291
Time Synchronization 292
Configure Integrated Motion on the EtherNet/IP Network 293
Enable Time Synchronization 293
Add a Drive 294
Scalability in Applications Using Integrated Motion on EtherNet/IP Networks 297
1769-L30ERM, 1769-L33ERM, and 1769-L36ERM Controllers 297
1769-L18ERM-BB1B Controller 299
1769-L27ERM-QBFC1B Controller 300

Use a Secure Digital Card

Chapter 12

Store or Load a Project with the Secure Digital Card 303
Store a Project 304
Load a Project 307

Troubleshoot the Module

Appendix A

Use Logix Designer Application for Troubleshooting 309
Fault Type Determination 311
Use the CompactLogix 5370 Controllers Status Indicators 312

Connections over an EtherNet/IP Network

Appendix B

EtherNet/IP Network Connections 315

Connect Power to the Series A L1 CompactLogix 5370 Controllers

Appendix C

CompactLogix 5370 L1, Series A, Controller Power Connection . . . 317
CompactLogix 5370 L1, Series A, Controller Field Power to I/O Devices Connection 322

History of Changes

Appendix D

Changes to the Manual 325

Index

Notes:

This manual describes the necessary tasks to install, configure, program, and operate a CompactLogix™ 5370 controller. This manual is intended for automation engineers and control system developers.

CompactLogix 5370 controllers are designed to provide solution for small and medium-sized applications.

Studio 5000 Environment

The Studio 5000 Automation Engineering & Design Environment™ combines engineering and design elements into a common environment. The first element in the Studio 5000® environment is the Studio 5000 Logix Designer™ application. The Logix Designer application is the rebranding of RSLogix™ 5000 software. The Logix Designer continues to be the product to program Logix5000™ controllers for discrete, process, batch, motion, safety, and drive-based solutions.

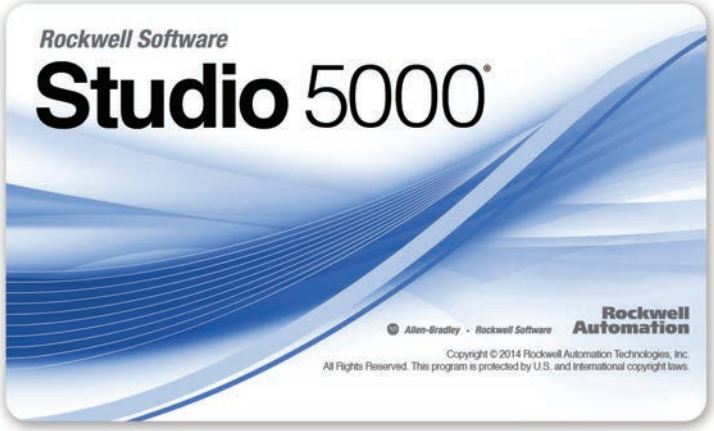

The Studio 5000 environment is the foundation for the future of Rockwell Automation® engineering design tools and capabilities. It is the one place for design engineers to develop the elements of their control system.

Additional Resources

These documents contain additional information that can assist you when using Rockwell Automation products.

Resource	Description
1769-SDN DeviceNet Scanner Module User Manual, publication 1769-UM009	Describes how to use the 1769-SDN to back up your CompactLogix 5370 L2 or L3 controller.
Compact High-speed Counter Module User Manual, publication 1769-UM006	Describes high-speed counter operation for standalone 1769-HSC when used with L2 and L3 Compact controllers as well as embedded high-speed counters in L2 embedded controllers.
Compact I/O DeviceNet Scanner Module Installation Instructions, publication 1769-IN060	Describes how to install the Compact I/O™ modules.
Compact I/O Expansion Power Supplies Installation Instructions, publication 1769-IN028	Describes how to wire the 1769 Compact I/O power supply.
Compact I/O Modules Installation Instructions, publication 1769-IN088	Describes how to install 1769 Compact I/O modules with any L2 or L3 CompactLogix controller.
CompactLogix 5370 L1 Controllers Quick Start, publication IASIMP-QS024	Describes basic tasks to design, install and start a CompactLogix 5370 L1 control system.
CompactLogix 5370 L2 Controllers Quick Start, publication IASIMP-QS025	Describes basic tasks to design, install and start a CompactLogix 5370 L2 control system.
CompactLogix 5370 L3 Controllers Quick Start, publication IASIMP-QS023	Describes basic tasks to design, install and start a CompactLogix 5370 L3 control system.
CompactLogix Controllers Specifications Technical Data, publication 1769-TD005	Provides CompactLogix controller specifications for all CompactLogix controllers.
CompactLogix System Selection Guide, publication 1769-SG001	Describes information about products used in a CompactLogix control system to assist you in designing a control solution.
Ethernet Design Considerations Reference Manual, publication ENET-RM002	Describes the following concepts that you must consider when designing a control system that includes an EtherNet/IP network: • EtherNet/IP overview • Ethernet infrastructure • EtherNet/IP protocol
EtherNet/IP Embedded Switch Technology Application Guide, publication ENET-AP005	Describes how to use a DLR network topology.
EtherNet/IP Socket Interface Application Technique, publication ENET-AT002	Describes socket interface applications.
Execution Time and Memory Use for Logix5000 Controller Instructions Reference Manual, publication 1756-RM087	Assists in estimating the memory use and execution time of programmed logic and in selecting among different programming options.
Integrated Architecture and CIP Sync Configuration Application Technique, publication IA-AT003	Describes CIP Sync technology and how to synchronize clocks in the Rockwell Automation Integrated Architecture™ system.
Integrated Motion on the EtherNet/IP Network Configuration and Startup User Manual, publication MOTION-UM003	Describes how to configure an Integrated Motion over EtherNet/IP motion application and to start up that motion solution in a Logix5000 control system.
Kinetix 350 Single-axis EtherNet/IP Servo Drives User Manual, publication 2097-UM002	Describes how to install, use and troubleshoot Kinetix® 350 drives.
Kinetix 6200 and Kinetix 6500 Modular Multi-axis Servo Drives User Manual, publication 2094-UM002	Describes how to install, use and troubleshoot Kinetix 6200 and Kinetix 6500 drives.
Logix5000 Add-On Instructions Programming Manual, publication 1756-PM010	Explains Add-On Instructions and how to use them.
Logix5000 Controllers and I/O Tag Data Programming Manual, publication 1756-PM004	Explains procedures for using and organizing I/O data tags.
Logix5000 Controllers Common Procedures Programming Manual, publication 1756-PM001	Guides all user levels in developing projects for Logix5000 controllers and provides links to individual guides for information on topics such as import/export, messages, security, and programming in different languages.

Resource	Description
Logix5000 Controllers Design Considerations Reference Manual, publication 1756-RM094	Provides advanced users with guidelines for system optimization and with system information to guide system design choices.
Logix5000 Controllers General Instructions Reference Manual, publication 1756-RM003	Provides details about instructions for programming a Logix5000 controller.
Logix 5000 Controllers Major, Minor, and I/O Faults Programming Manual, publication 1756-PM014	Explains major, minor, and I/O faults and the Controller Fault Handler.
Logix5000 Controllers Motion Instructions Reference Manual, publication MOTION-RM002	Details how to program the controllers for motion applications.
Logix5000 Controllers Nonvolatile Memory Card Programming Manual, publication 1756-PM017	Provides explanations for controller power up and corrupt memory situations.
Logix5000 Controllers Process Control/Drives Instruction Set Reference Manual, publication 1756-RM006	Details how to program the controller for process or drives applications.
POINT I/O 24V dc Expansion Power Supply Installation Instructions, publication 1734-IN058	Describes the 1734-EP24DC expansion power supply.
POINT I/O Digital and Analog Modules and POINTBlock I/O Modules User Manual, publication 1734-UM001	Describes how to return a 1734 POINT I/O module to Autobaud.
POINT I/O Field Potential Distributor Modules Installation Instructions, publication 1734-IN059	Describes the 1734-FPD POINT I/O Field Power Distributor module.
PowerFlex 755 Drive Embedded EtherNet/IP Adapter User Manual, publication 750COM-UM001	Describes how to install, use and troubleshoot PowerFlex® 755 drives.
Using Event Tasks with Logix5000 Controllers White Paper, publication LOGIX-WP003	Describes event tasks.
Industrial Automation Wiring and Grounding Guidelines, publication 1770-4.1	Provides general guidelines for installing a Rockwell Automation industrial system.
Product Certifications website, http://www.ab.com	Provides declarations of conformity, certificates, and other certification details.

You can view or download publications at http://www.rockwellautomation.com/literature/. To order paper copies of technical documentation, contact your local Allen-Bradley distributor or Rockwell Automation sales representative.

Notes:

Install the CompactLogix 5370 L1 Controller

Topic	Page
Before You Begin	18
Install the Secure Digital Card	22
Install the System	24
Connect to the Controller via a USB Cable	35
Connect the Controller to an EtherNet/IP Network	36

ATTENTION: Environment and Enclosure

This equipment is intended for use in a Pollution Degree 2 industrial environment, in overvoltage Category II applications (as defined in IEC 60664-1), at altitudes up to 2000 m (6562 ft) without derating.

This equipment is considered Group 1, Class A industrial equipment according to IEC/CISPR 11. Without appropriate precautions, there may be difficulties with electromagnetic compatibility in residential and other environments due to conducted and radiated disturbances.

This equipment is supplied as open-type equipment. It must be mounted within an enclosure that is suitably designed for those specific environmental conditions that will be present and appropriately designed to prevent personal injury resulting from accessibility to live parts. The enclosure must have suitable flame-retardant properties to prevent or minimize the spread of flame, complying with a flame spread rating of 5VA, V2, V1, V0 (or equivalent) if nonmetallic. The interior of the enclosure must be accessible only by the use of a tool. Subsequent sections of this publication may contain additional information regarding specific enclosure type ratings that are required to comply with certain product safety certifications.

In addition to this publication, see the following:

- Industrial Automation Wiring and Grounding Guidelines, publication 1770-4.1, for additional installation requirements
- NEMA 250 and IEC 60529, as applicable, for explanations of the degrees of protection provided by enclosures

North American Hazardous Location Approval

The following information applies when operating this equipment in hazardous locations.	Informations sur l'utilisation de cet équipement en environnements dangereux.
Products marked "CL I, DIV 2, GP A, B, C, D" are suitable for use in Class I Division 2 Groups A, B, C, D, Hazardous Locations and nonhazardous locations only. Each product is supplied with markings on the rating nameplate indicating the hazardous location temperature code. When combining products within a system, the most adverse temperature code (lowest "T" number) may be used to help determine the overall temperature code of the system. Combinations of equipment in your system are subject to investigation by the local Authority Having Jurisdiction at the time of installation.	Les produits marqués "CL I, DIV 2, GP A, B, C, D" ne conviennent qu'à une utilisation en environnements de Classe I Division 2 Groupes A, B, C, D dangereux et non dangereux. Chaque produit est livré avec des marquages sur sa plaque d'identification qui indiquent le code de température pour les environnements dangereux. Lorsque plusieurs produits sont combinés dans un système, le code de température le plus défavorable (code de température le plus faible) peut être utilisé pour déterminer le code de température global du système. Les combinaisons d'équipements dans le système sont sujettes à inspection par les autorités locales qualifiées au moment de l'installation.
WARNING: EXPLOSION HAZARD - • Do not disconnect equipment unless power has been removed or the area is known to be nonhazardous. • Do not disconnect connections to this equipment unless power has been removed or the area is known to be nonhazardous. Secure any external connections that mate to this equipment by using screws, sliding latches, threaded connectors, or other means provided with this product. • Substitution of components may impair suitability for Class I, Division 2. • If this product contains batteries, they must only be changed in an area known to be nonhazardous.	**AVERTISSEMENT:** RISQUE D'EXPLOSION – • Couper le courant ou s'assurer que l'environnement est classé non dangereux avant de débrancher l'équipement. • Couper le courant ou s'assurer que l'environnement est classé non dangereux avant de débrancher les connecteurs. Fixer tous les connecteurs externes reliés à cet équipement à l'aide de vis, loquets coulissants, connecteurs filetés ou autres moyens fournis avec ce produit. • La substitution de composants peut rendre cet équipement inadapté à une utilisation en environnement de Classe I, Division 2. • S'assurer que l'environnement est classé non dangereux avant de changer les piles.

European Hazardous Location Approval

The following applies when the product bears the Ex Marking.

This equipment is intended for use in potentially explosive atmospheres as defined by European Union Directive 94/9/EC and has been found to comply with the Essential Health and Safety Requirements relating to the design and construction of Category 3 equipment intended for use in Zone 2 potentially explosive atmospheres, given in Annex II to this Directive.

Compliance with the Essential Health and Safety Requirements has been assured by compliance with EN 60079-15 and EN 60079-0.

ATTENTION: This equipment is not resistant to sunlight or other sources of UV radiation.

WARNING:

- This equipment must be installed in an enclosure providing at least IP54 protection when applied in Zone 2 environments.
- This equipment shall be used within its specified ratings defined by Rockwell Automation.
- Provision shall be made to prevent the rated voltage from being exceeded by transient disturbances of more than 40% when applied in Zone 2 environments.
- Secure any external connections that mate to this equipment by using screws, sliding latches, threaded connectors, or other means provided with this product.
- Do not disconnect equipment unless power has been removed or the area is known to be nonhazardous.
- Enclosure must be marked with the following: "Warning - Do not open when energized." After installation of equipment into the enclosure, access to termination compartments shall be dimensioned so that conductors can be readily connected.

ATTENTION: Prevent Electrostatic Discharge

This equipment is sensitive to electrostatic discharge, which can cause internal damage and affect normal operation. Follow these guidelines when you handle this equipment:

- Touch a grounded object to discharge potential static.
- Wear an approved grounding wriststrap.
- Do not touch connectors or pins on component boards.
- Do not touch circuit components inside the equipment.
- Use a static-safe workstation, if available.
- Store the equipment in appropriate static-safe packaging when not in use.

Before You Begin

The CompactLogix 5370 L1, series B, controller redesign occurred to provide an option to use one external power supply for system power and field side power.

There are differences between the CompactLogix 5370 L1, series A and B, controllers, which are detailed throughout the sections of this manual.

Consider the following before installing a CompactLogix 5370 L1 controller:

ATTENTION: If this equipment is used in a manner not specified by the manufacturer, the protection provided by the equipment can be impaired.

- The control system includes the controller, an embedded power supply, and embedded I/O points.

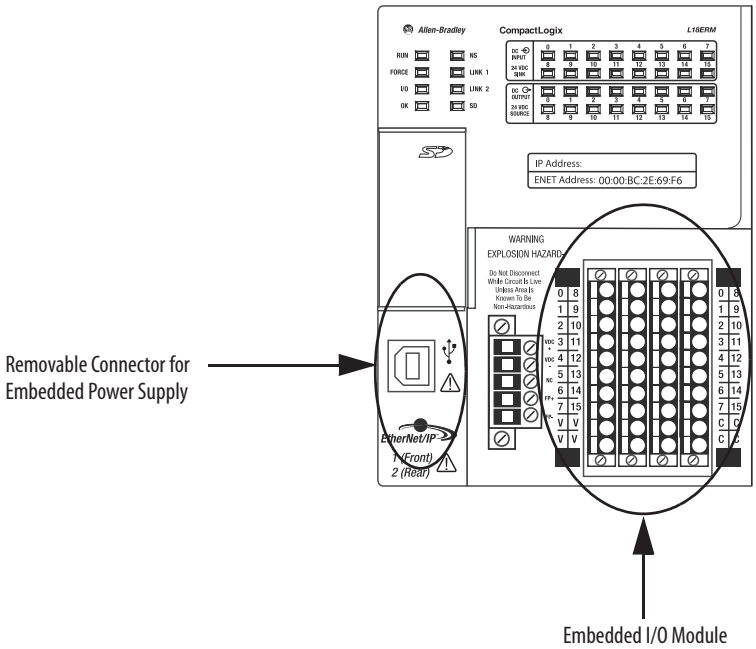

- The embedded power supply for the series A L1 controller is a 24V DC nominal, non-isolated power supply with an input range of 10...28.8V DC. You wire the embedded power supply via a removable connector.
- The embedded power supply for the series B L1 controller is a 24V DC nominal, isolated power supply with an input range of 10...28.8V DC. You wire the embedded power supply via a removable connector.

IMPORTANT You must use a dedicated external Class 2/SELV-approved power supply to provide power to the system, according to needs of the application, and within the operating voltage range of the controller for only series A L1 controllers.

The external power supply that provides power to the embedded power supply of the controller cannot be used to provide power to any other components or devices in the application for only series A L1 controllers.

- A second, fused external power supply must be used to provide power to other components for only series A L1 controllers (see Appendix C).
- Power for other components can be provided from the external power supply that is used to provide power to the system for only series B L1 controllers.
- The controller has 16 embedded digital input points and 16 embedded digital output points. You wire the input and output points via a removable connector.
- The controller supports the use of a limited number of 1734 POINT I/O™ modules on the POINTBus™ backplane as local expansion modules.

IMPORTANT You must use the latest series and firmware revision for all 1734 POINT I/O modules in the local expansion slots to make sure that your application operates as expected. Use of an older firmware revision renders the entire 1734 bus inoperable.

The following table lists local expansion module support by controller catalog number.

Table 1 - Local Expansion Module Support for CompactLogix 5370 L1 Controllers

Cat. No.	1734 POINT I/O Modules Supported, max
1769-L16ER-BB1B	6
1769-L18ER-BB1B	8
1769-L18ERM-BB1B	

See Chapter 7 for further information about the I/O modules.

ATTENTION: Do not discard the end cap. Use this end cap to cover the exposed interconnections on the last mounting base on the DIN rail. Failure to do so could result in equipment damage or injury from electric shock.

For more information on how to terminate the end of your system, see page 28.

1734 POINT I/O modules support removal and insertion under power.

CompactLogix 5370 L1 Controller Parts

These parts are included in the box when you order your controller:

- Controller - Specific catalog number varies by order
- 1784-SD1 Secure Digital (SD) card with 1 GB of memory storage

  A 1784-SD2 SD card with 2 GB of memory storage, or more 1784-SD1 SD cards, are also available if you need extra memory.

  IMPORTANT The life expectancy of nonvolatile media is dependent on the number of write cycles that are performed. Nonvolatile media use a wear leveling technique or technology for prolonging the service life, but avoid frequent writes.

  Avoid frequent writes when logging data. We recommend that you log data to a buffer in the memory of your controller and limit the number of times data is written to removable media.

- An end cap protective cover that slides onto the right side of the CompactLogix 5370 L1 control system.

Installation Summary

To install a CompactLogix 5370 L1 controller, follow these steps.

1. Install the Secure Digital Card.
2. Install the System.
3. Connect to the Controller via a USB Cable.
4. Connect the Controller to an EtherNet/IP Network.

Install the Secure Digital Card

The CompactLogix 5370 L1 controller is shipped from the factory with the 1784-SD1 **SD card installed**.

Complete these steps to reinstall an SD card that has been removed from the controller back into the controller or to install a new SD card into the controller.

It is recommended that you leave the SD card in the controller, even when it is not used. If the controller experiences a Major Non-recoverable Fault, extended fault information is saved to the card.

WARNING: When you insert or remove the SD card while power is on, an electrical arc can occur. This could cause an explosion in hazardous location installations.

Be sure that power is removed or the area is nonhazardous before proceeding.

1. Verify that the SD card is locked or unlocked according to your preference. Consider the following when deciding to lock the card before installation:
   – If the card is unlocked, the controller can write data to it or read data from it.

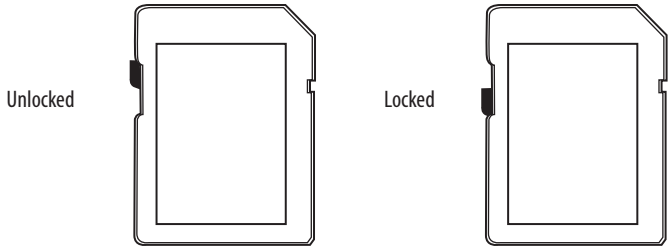

2. Open the door for the SD card.

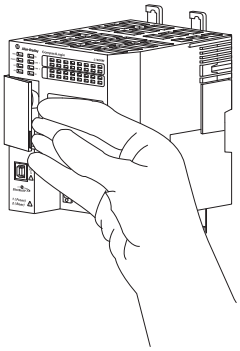

3. Insert the SD card into the SD card slot.

   You can install the SD card in only one orientation. The beveled corner is at the top.

   If you feel resistance when inserting the SD card, pull it out and change the orientation.

4. Gently press the card until it clicks into place.

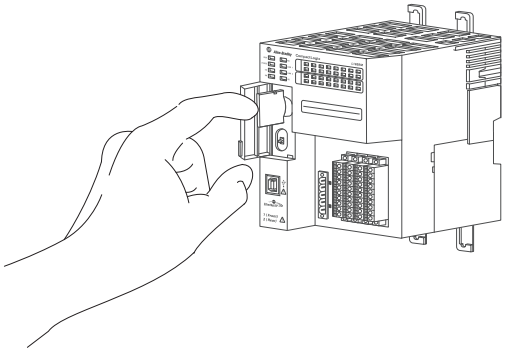

5. Close the SD card door.

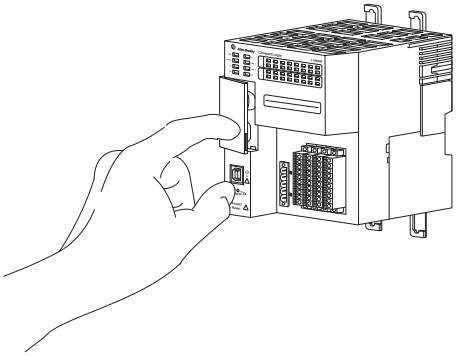

We recommend that you keep the SD card door closed during normal system operation. For more information on using the SD card, see Use a Secure Digital Card on page 301.

Install the System

Complete the following steps to install the CompactLogix 5370 L1 control system.

- Mount the System
- Ground the System
- Install the Controller
- Connect Power to the Controller (Series B)

Mount the System

You mount a CompactLogix 5370 L1 control system on a DIN rail. Before you complete the steps that are required to install the system, install a DIN rail.

WARNING: When used in a Class I, Division 2, hazardous location, this equipment must be mounted in a suitable enclosure with proper wiring method that complies with the governing electrical codes.

Before you mount a CompactLogix 5370 L1 control system, consider the following requirements:

- Available DIN Rails
- Minimum Spacing
- System Dimensions

Available DIN Rails

ATTENTION: This product is grounded through the DIN rail to chassis ground. Use zinc-plated yellow-chromate steel DIN rail to assure proper grounding. The use of other DIN rail materials (for example, aluminum or plastic) that can corrode, oxidize, or are poor conductors, can result in improper or intermittent grounding. Secure DIN rail to mounting surface approximately every 200 mm (7.8 in.) and use end-anchors appropriately.

You can mount the CompactLogix 5370 L1 controller on the following DIN rails:

- EN 50 022 - 35 x 7.5 mm (1.38 x 0.30 in.)
- EN 50 022 - 35 x 15 mm (1.38 x 0.59 in.)

IMPORTANT You must install bumpers on the back of your CompactLogix 5370 L1 controller before mounting it on the EN 50022 - 35 x 15 mm (1.38 x 0.59 in.) DIN rail.

Bumper Selection:

- For more information on Bumper Selection, see Rockwell Automation Knowledgebase article #591565, 5370 L16ER/L18ER recommended Bumpers for use with 1.38 x 0.59 in. DIN rail. You can access the article at: (Login required) https://rockwellautomation.custhelp.com/

Minimum Spacing

Maintain spacing from enclosure walls, wireways, and adjacent equipment. Allow 50 mm (2 in.) of space on all sides, as shown. This spacing provides ventilation and electrical isolation.

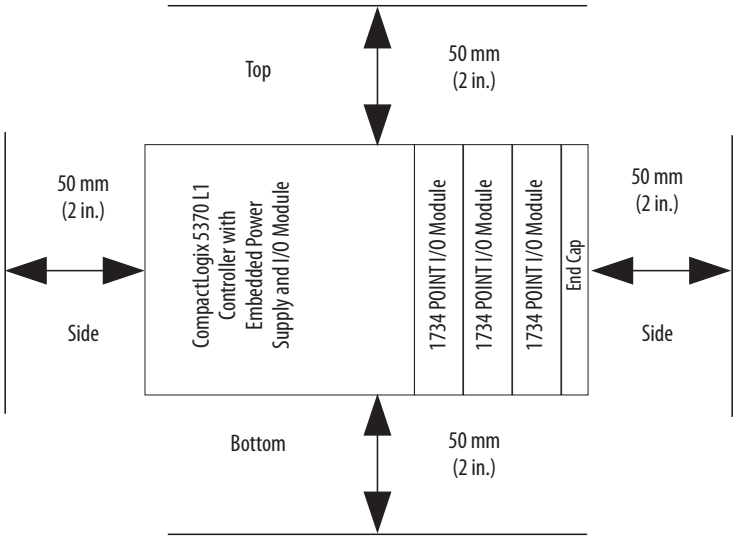

System Dimensions

This graphic shows the system dimensions.

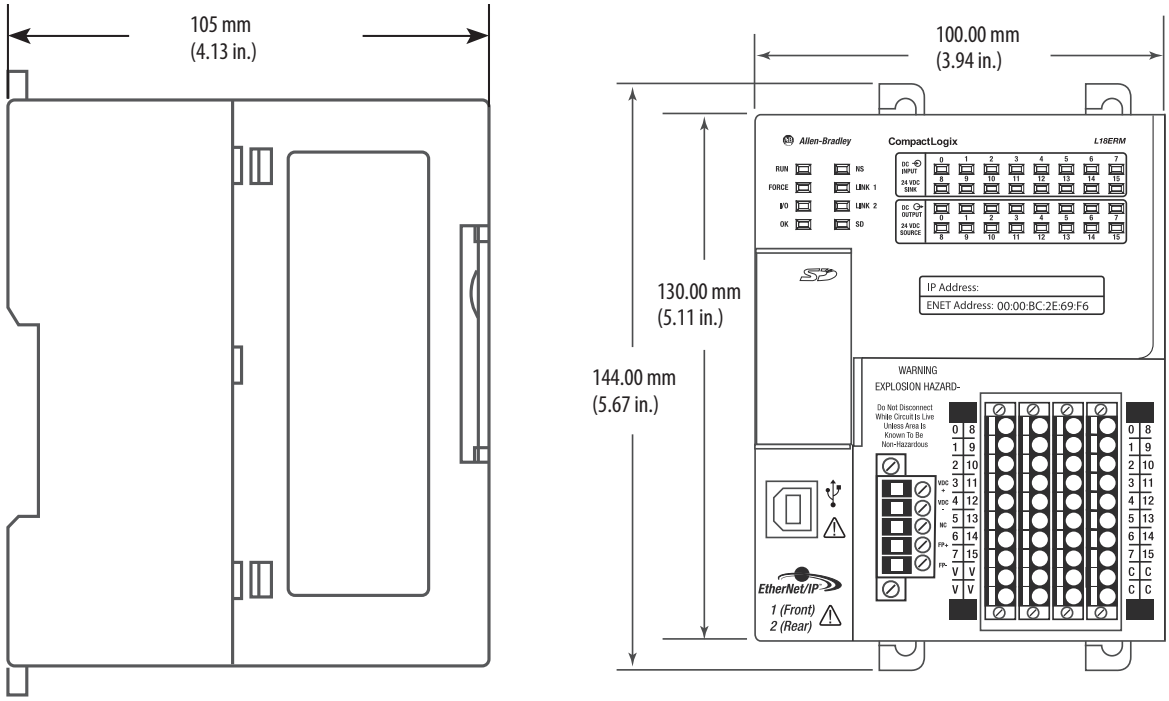

This graphic shows the system dimensions with Expansion I/O modules installed.

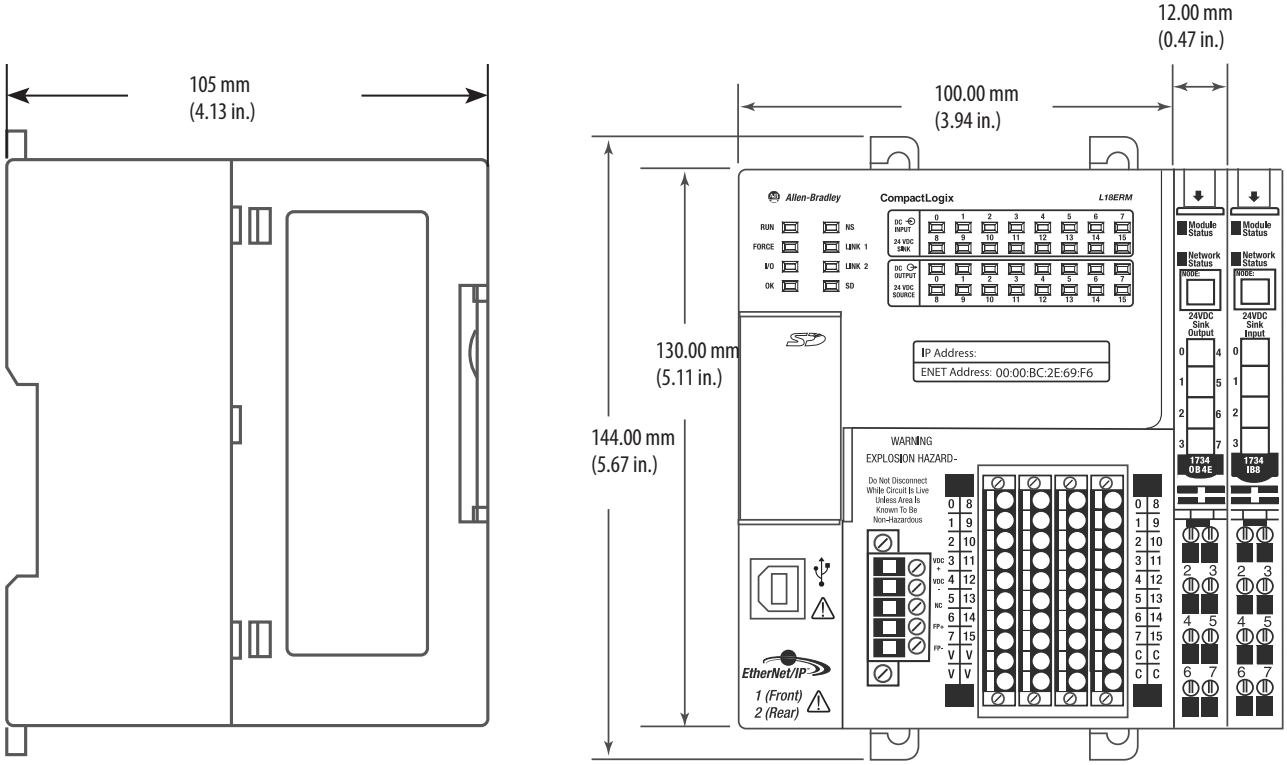

Ground the System

ATTENTION: This product is intended to be mounted to a well-grounded mounting surface such as a metal panel. Additional grounding connections from the power supply's mounting tabs or DIN rail (if used) are not required unless the mounting surface cannot be grounded.

See Industrial Automation Wiring and Grounding Guidelines, Rockwell Automation publication 1770-4.1, for additional information.

Install the Controller

Complete these steps to install the controller.

1. Pull out the locking tabs.

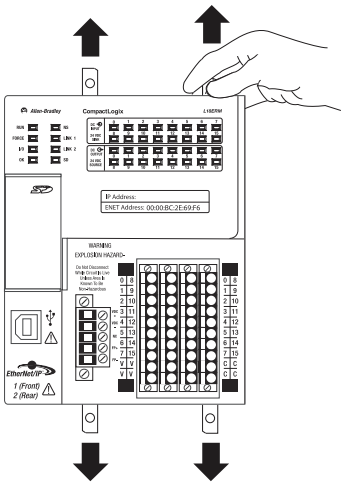

2. Slide the controller into position on the DIN rail and push the locking tabs in.

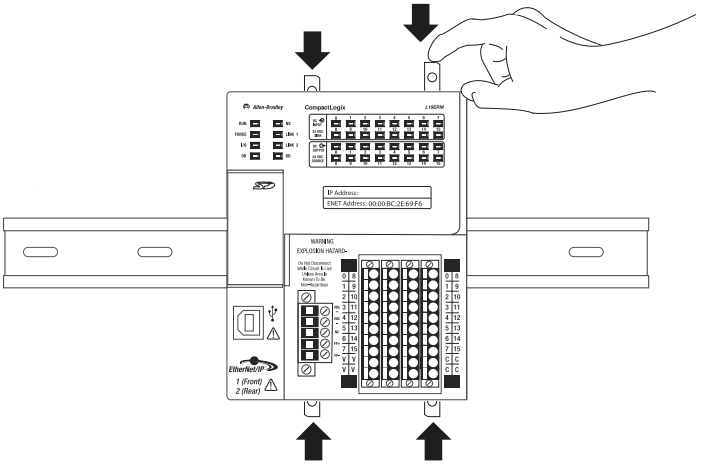

3. If you are not using local expansion modules, use the tongue-and-groove slots on the right side of the controller to slide a protective covering onto the controller. The protective cover ships with the controller.

The covering covers the exposed interconnections on the right side of the controller. Failure to use a protective covering can result in equipment damage or injury from electric shock.

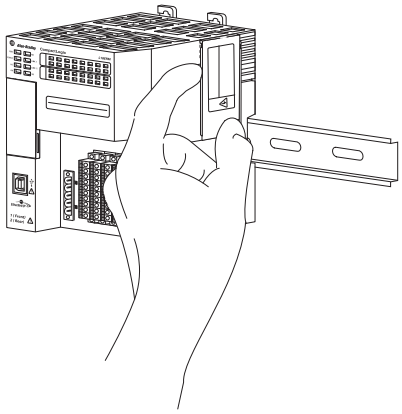

If you are using local expansion modules, see Local Expansion Modules on page 166 for more information on how to install them in a CompactLogix 5370 L1 control system.

Connect Power to the Controller (Series B)

For information to connect power to a series A L1 controller, see Appendix C.

IMPORTANT This section describes how to power the controller via the VDC+ and VDC- terminals.

Connections to the VDC+ and VDC- terminals **do not** provide power to input or output devices that are connected to the embedded I/O modules of the controller or local expansion modules. Power must be connected to the FP+ and FP- terminals to provide power to input or output devices that are connected to the embedded I/O modules of the controller or local expansion modules.

The external power supply can be used to power both the VDC+/- and FP+/- terminals on the series B L1 controller, see page 152.

For more information on how to provide power to input or output devices that are connected to the embedded I/O modules of the controller and local expansion modules, see page 152.

WARNING: Do not connect directly to line voltage. Line voltage must be supplied by a suitable, approved isolating transformer or power supply having short circuit capacity not exceeding 100VA maximum or equivalent. The controller power requirement is 30VA.

Power is connected to the controller via a removable connector that is connected to the front of the controller. The following graphic shows the connector.

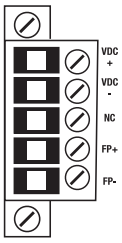

IMPORTANT The controller is grounded once it is installed on a DIN rail as described in Mount the System on page 24.

Consider these points before completing the steps in this section:

- This section describes how to connect an external 24V DC power source to the CompactLogix 5370 L1 controller.

  For information on how to provide field power to input and output devices that are connected to the embedded I/O modules of the controller and local expansion modules via the removable connector, see page 152.

- Use a power source that most effectively meets your application needs. That is, calculate The power requiremetns for your application before choosing a power source to avoid using a power source that far exceeds your application requirements.

- This section assumes that any DIN rail you use has been grounded following Industrial Automation Wiring and Grounding Guidelines, publication 1770-4.1.

- The embedded power supply of the CompactLogix 5370 L1 controller provides power to the controller and POINTBus backplane.

- Not all Class 2/SELV-listed power supplies are certified for use in all applications, for example, use in nonhazardous and hazardous environments.

  Before installing an external power supply, consult all specification and certification information to verify that you are using an acceptable external power supply.

- Only for example purposes, this section describes how to use a 1606-XLE120E, NEC Class 2 switched-mode power supply. The exact steps for other external power supplies can vary from the steps that are described here.

Complete these steps to connect power to the CompactLogix 5370 L1 controller.

1. Verify that the external 24V DC power source is not powered.
2. Mount the external 24V DC power source on a DIN rail.

   The external 24V DC power source can be installed on the same DIN rail as the controller or a separate DIN rail.

3. Connect wires to the 24V DC+ and 24V DC- connections on the external 24V DC power source.

WARNING: If you connect or disconnect wiring while the field-side power is on, an electrical arc can occur. This could cause an explosion in hazardous location installations. Be sure that power is removed or the area is nonhazardous before proceeding.

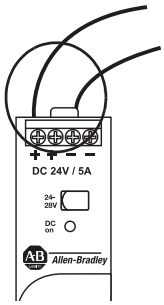

4. Pull the removable connector off the CompactLogix 5370 L1 controller.

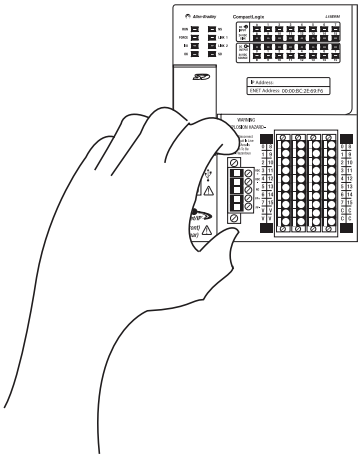

5. Connect the wire that is connected to the 24V DC+ terminal on the external 24V DC power source to the VDC+ terminal, that is, the top terminal, on the removable connector.

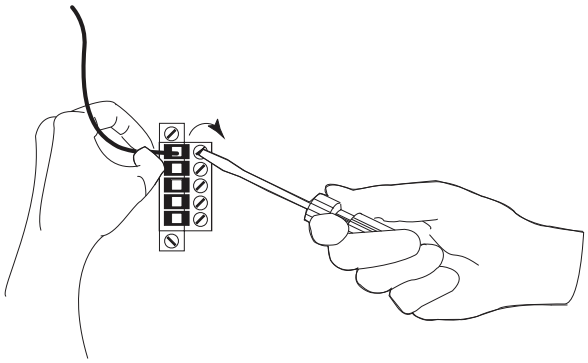

6. Connect the wire that is connected to the 24V DC- terminal on the external 24V DC power source to the VDC- terminal, that is, the terminal that is second from the top, on the removable connector.

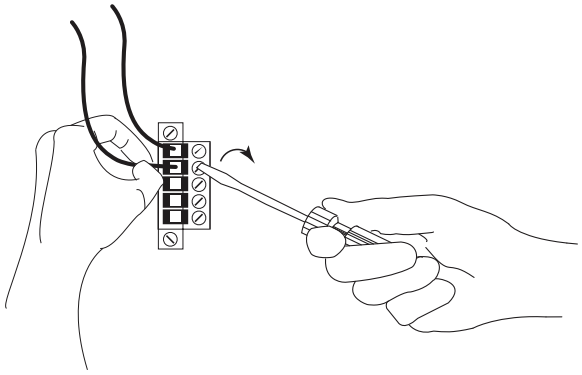

IMPORTANT If your application requires a power control device, for example, a switch or relay, between the external 24V DC power source and the CompactLogix 5370 L1 controller to control when the controller is powered, you must install the power control device at the VDC+ terminal on the removable connector.

If you install the power control device at the VDC- terminal, the CompactLogix 5370 L1 controller can have problems powering up or powering down properly.

7. Plug the removable connector back into the controller.
8. Secure the removable connector in place.

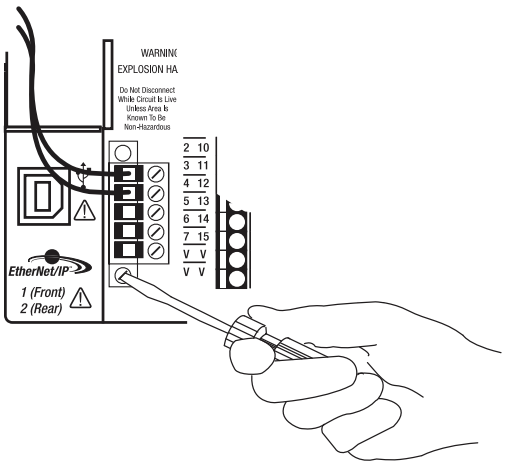

9. Turn on power to the external 24V DC power source.

The following graphic shows an external 24V DC power source that is connected to a CompactLogix 5370 L1 controller.

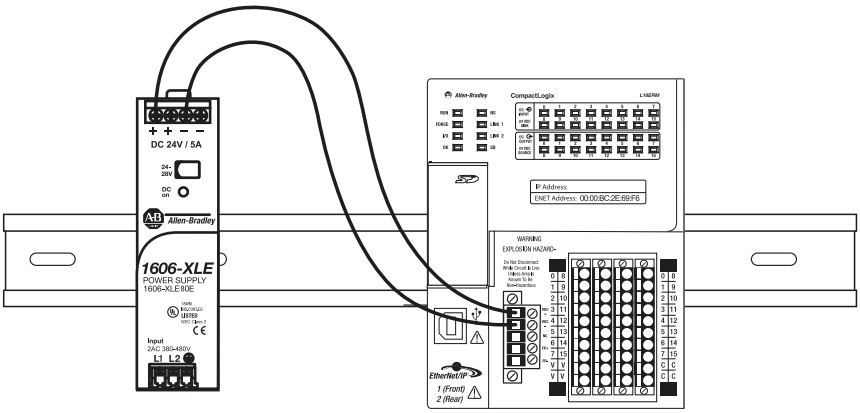

Connect to the Controller via a USB Cable

The controller has a USB port that uses a Type B receptacle. The port is USB 2.0-compatible and operates at 12 Mbps.

Use a USB cable to connect your computer to the USB port. With this connection, you can upgrade firmware and download programs to the controller directly from your computer.

ATTENTION: The USB port is intended only for temporary local programming purposes and not intended for permanent connection.

The USB cable is not to exceed 3.0 m (9.84 ft) and must not contain hubs.

WARNING: Do not use the USB port in hazardous locations.

Plug the USB cable into the CompactLogix 5370 L1 controller.

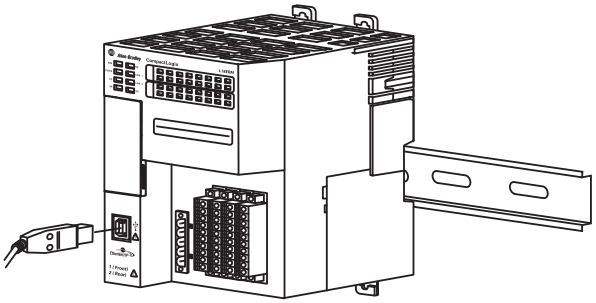

Connect the Controller to an EtherNet/IP Network

WARNING: If you connect or disconnect the communication cable with power applied to this module or any device on the network, an electrical arc can occur. This could cause an explosion in hazardous location installations.

Be sure that power is removed or the area is nonhazardous before proceeding.

Connect the RJ45 connector of the Ethernet cable to one of the Ethernet ports on the controller. The ports are on the bottom of the controller.

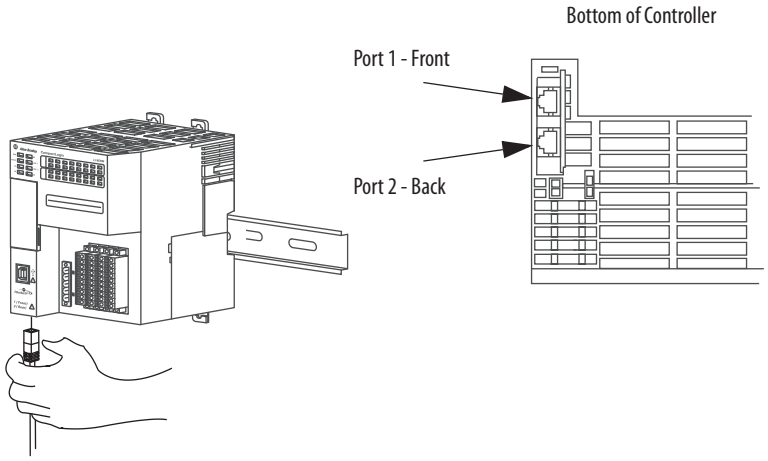

IMPORTANT This example shows how to connect the controller to the network through one port. Depending on the network topology of your application, you can connect both ports of the controller to the EtherNet/IP network.

For more information on EtherNet/IP network topologies, see page 132.

Connecting to Different EtherNet/IP Network Topologies

CompactLogix 5370 L1 controllers have embedded switch technology and two EtherNet/IP ports that let you use it in various EtherNet/IP network topologies:

- Device-level ring network topology - Both ports on the controller are connected to the network.
- Linear network topology - Both ports on the controller are connected to the network.
- Star network topology - One port on the controller is connected to the network.

There are connection and configuration requirements for each EtherNet/IP network topology.

For more information, see EtherNet/IP Network Topologies on page 132.

Install the CompactLogix 5370 L2 Controller

Topic	Page
Before You Begin	40
Install the Secure Digital Card	42
Install the System	44
Connect to the Controller via a USB Cable	57
Connect the Controller to an EtherNet/IP Network	58

ATTENTION: Environment and Enclosure

This equipment is intended for use in a Pollution Degree 2 industrial environment, in overvoltage Category II applications (as defined in IEC 60664-1), at altitudes up to 2000 m (6562 ft) without derating.

This equipment is considered Group 1, Class A industrial equipment according to IEC/CISPR 11. Without appropriate precautions, there may be difficulties with electromagnetic compatibility in residential and other environments due to conducted and radiated disturbances.

This equipment is supplied as open-type equipment. It must be mounted within an enclosure that is suitably designed for those specific environmental conditions that will be present and appropriately designed to prevent personal injury resulting from accessibility to live parts. The enclosure must have suitable flame-retardant properties to prevent or minimize the spread of flame, complying with a flame spread rating of 5VA, V2, V1, V0 (or equivalent) if nonmetallic. The interior of the enclosure must be accessible only by the use of a tool. Subsequent sections of this publication may contain additional information regarding specific enclosure type ratings that are required to comply with certain product safety certifications.

In addition to this publication, see the following:

- Industrial Automation Wiring and Grounding Guidelines, publication 1770-4.1, for additional installation requirements
- NEMA 250 and IEC 60529, as applicable, for explanations of the degrees of protection provided by enclosures

North American Hazardous Location Approval

The following information applies when operating this equipment in hazardous locations.	Informations sur l'utilisation de cet équipement en environnements dangereux.
Products marked "CL I, DIV 2, GP A, B, C, D" are suitable for use in Class I Division 2 Groups A, B, C, D, Hazardous Locations and nonhazardous locations only. Each product is supplied with markings on the rating nameplate indicating the hazardous location temperature code. When combining products within a system, the most adverse temperature code (lowest "T" number) may be used to help determine the overall temperature code of the system. Combinations of equipment in your system are subject to investigation by the local Authority Having Jurisdiction at the time of installation.	Les produits marqués "CL I, DIV 2, GP A, B, C, D" ne conviennent qu'à une utilisation en environnements de Classe I Division 2 Groupes A, B, C, D dangereux et non dangereux. Chaque produit est livré avec des marquages sur sa plaque d'identification qui indiquent le code de température pour les environnements dangereux. Lorsque plusieurs produits sont combinés dans un système, le code de température le plus défavorable (code de température le plus faible) peut être utilisé pour déterminer le code de température global du système. Les combinaisons d'équipements dans le système sont sujettes à inspection par les autorités locales qualifiées au moment de l'installation.
WARNING: EXPLOSION HAZARD - • Do not disconnect equipment unless power has been removed or the area is known to be nonhazardous. • Do not disconnect connections to this equipment unless power has been removed or the area is known to be nonhazardous. Secure any external connections that mate to this equipment by using screws, sliding latches, threaded connectors, or other means provided with this product. • Substitution of components may impair suitability for Class I, Division 2. • If this product contains batteries, they must only be changed in an area known to be nonhazardous.	**AVERTISSEMENT:** RISQUE D'EXPLOSION – • Couper le courant ou s'assurer que l'environnement est classé non dangereux avant de débrancher l'équipement. • Couper le courant ou s'assurer que l'environnement est classé non dangereux avant de débrancher les connecteurs. Fixer tous les connecteurs externes reliés à cet équipement à l'aide de vis, loquets coulissants, connecteurs filetés ou autres moyens fournis avec ce produit. • La substitution de composants peut rendre cet équipement inadapté à une utilisation en environnement de Classe I, Division 2. • S'assurer que l'environnement est classé non dangereux avant de changer les piles.

European Hazardous Location Approval

The following applies when the product bears the Ex Marking.

This equipment is intended for use in potentially explosive atmospheres as defined by European Union Directive 94/9/EC and has been found to comply with the Essential Health and Safety Requirements relating to the design and construction of Category 3 equipment intended for use in Zone 2 potentially explosive atmospheres, given in Annex II to this Directive.

Compliance with the Essential Health and Safety Requirements has been assured by compliance with EN 60079-15 and EN 60079-0.

ATTENTION: This equipment is not resistant to sunlight or other sources of UV radiation.

WARNING:

- This equipment must be installed in an enclosure providing at least IP54 protection when applied in Zone 2 environments.
- This equipment shall be used within its specified ratings defined by Rockwell Automation.
- Provision shall be made to prevent the rated voltage from being exceeded by transient disturbances of more than 40% when applied in Zone 2 environments.
- Secure any external connections that mate to this equipment by using screws, sliding latches, threaded connectors, or other means provided with this product.
- Do not disconnect equipment unless power has been removed or the area is known to be nonhazardous.
- Enclosure must be marked with the following: "Warning - Do not open when energized." After installation of equipment into the enclosure, access to termination compartments shall be dimensioned so that conductors can be readily connected.

ATTENTION: Prevent Electrostatic Discharge

This equipment is sensitive to electrostatic discharge, which can cause internal damage and affect normal operation. Follow these guidelines when you handle this equipment:

- Touch a grounded object to discharge potential static.
- Wear an approved grounding wriststrap.
- Do not touch connectors or pins on component boards.
- Do not touch circuit components inside the equipment.
- Use a static-safe workstation, if available.
- Store the equipment in appropriate static-safe packaging when not in use.

Before You Begin

Consider the following before installing a CompactLogix 5370 L2 controller:

- The control system includes a controller, an embedded power supply, embedded I/O points, and a 1769-ECR right end cap.
- The embedded power supply is a 24V DC input, isolated power supply

  The following graphic shows an example CompactLogix 5370 L2 controller.

1769-L24ER-QBFC1B Control System

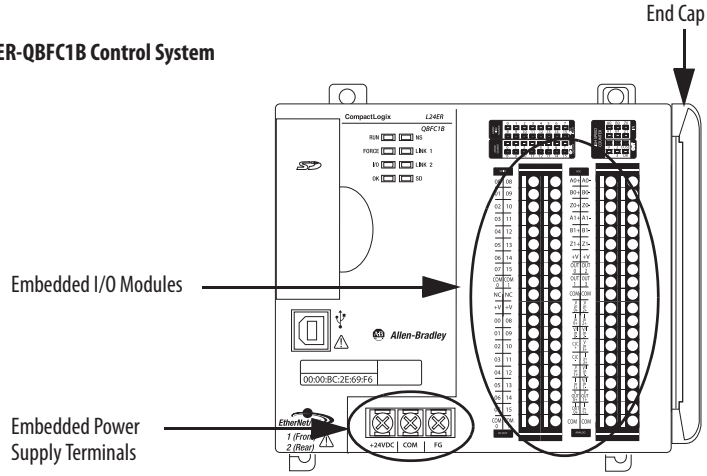

ATTENTION: You must use an external power supply that is Class 2 or SELV-listed for series A L1 controllers.

For example, you can use a 1606-XLSDNET4, standard switched-mode power supply, as shown in this chapter.

- The controllers have embedded I/O points. You wire the input and output points via a removable connector.
- The controller supports the use of up to four Compact I/O modules on the local 1769 CompactBus backplane as local expansion modules.

  For more information on using **embedded I/O** points and **local expansion modules**, see Chapter 8, Use I/O Modules with CompactLogix 5370 L2 Controllers on page 189.

- You must terminate the end of the CompactBus via a 1769-ECR right end cap as shown in step 6 on page 52.
- You cannot remove nor install Compact I/O modules while the controller is powered.

ATTENTION: CompactLogix 5370 L2 control systems do not support removal and insertion under power (RIUP). Removing a 1769 Compact I/O module or end cap generates a controller fault and may also result in damage to system components.

CompactLogix 5370 L2 Controller Parts

These parts are included in the box when you order your controller:

- Controller - Specific catalog number varies by order
- 1769-ECR Compact I/O End Cap/Terminator
- 1784-SD1 Secure Digital (SD) card with 1 GB of memory storage

  A 1784-SD2 SD card with 2 GB of memory storage, or more1784-SD1 SD cards, are also available if you need extra memory.

IMPORTANT The life expectancy of nonvolatile media is dependent on the number of write cycles that are performed. Nonvolatile media use a wear leveling technique or technology for prolonging the service life, but avoid frequent writes.

Avoid frequent writes when logging data. We recommend that you log data to a buffer in the memory of your controller and limit the number of times data is written to removable media.

Installation Summary

To install a CompactLogix 5370 L2 controller, follow these steps.

1. Install the Secure Digital Card.
2. Install the System.
3. Connect to the Controller via a USB Cable.
4. Connect the Controller to an EtherNet/IP Network.

Install the Secure Digital Card

The CompactLogix 5370 L2 controller is shipped from the factory with the 1784-SD1 **SD card installed**.

Complete these steps to reinstall an SD card that has been removed from the controller back into the controller or to install a new SD card into the controller.

It is recommended that you leave the SD card in the controller, even when it is not used. If the controller experiences a Major Non-recoverable Fault, extended fault information is saved to the card.

WARNING: When you insert or remove the SD card while power is on, an electrical arc can occur. This could cause an explosion in hazardous location installations.

Be sure that power is removed or the area is nonhazardous before proceeding.

1. Verify that the SD card is locked or unlocked according to your preference. Consider the following when deciding to lock the card before installation:
   - If the card is unlocked, the controller can write data to it or read data from it.

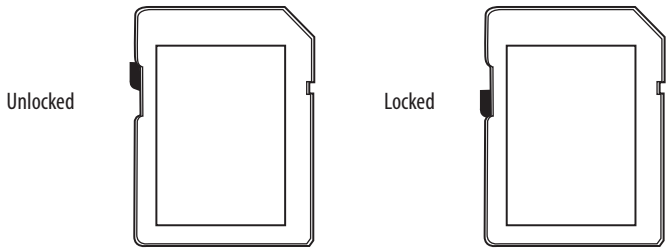

2. Open the door for the SD card.

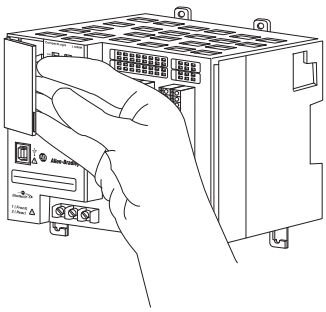

3. Insert the SD card into the SD card slot.

   You can install the SD card in one orientation only. The beveled corner is at the bottom.

   If you feel resistance when inserting the SD card, pull it out and change the orientation.

4. Gently press the card until it clicks into place.

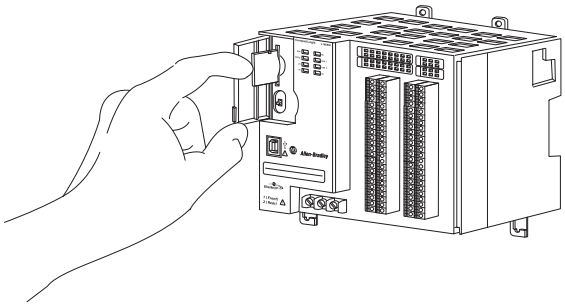

5. Close the SD card door.

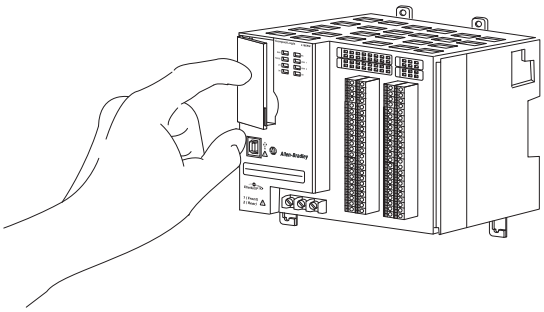

   We recommend that you keep the SD card door closed during normal system operation. For more information on using the SD card, see Use a Secure Digital Card on page 301.

Install the System

Complete the following tasks to install the CompactLogix 5370 L2 control system:

- Mount the System
- Ground the System
- Install the Controller
- Connect Power to the Control System

Mount the System

You can mount a CompactLogix 5370 L2 control system on a DIN rail or a panel.

WARNING: When used in a Class I, Division 2, hazardous location, this equipment must be mounted in a suitable enclosure with proper wiring method that complies with the governing electrical codes.

Before you mount a CompactLogix 5370 L2 control system, consider the following requirements:

- Available DIN Rails
- Minimum Spacing
- System Dimensions

Available DIN Rails

ATTENTION: This product is grounded through the DIN rail to chassis ground. Use zinc-plated yellow-chromate steel DIN rail to assure proper grounding. The use of other DIN rail materials (for example, aluminum or plastic) that can corrode, oxidize, or are poor conductors, can result in improper or intermittent grounding. Secure DIN rail to mounting surface approximately every 200 mm (7.8 in.) and use end-anchors appropriately.

You can mount the CompactLogix 5370 L2 controller on the following DIN rails:

- EN 50 022 - 35 x 7.5 mm (1.38 x 0.30 in.)
- EN 50 022 - 35 x 15 mm (1.38 x 0.59 in.)

Minimum Spacing

Maintain spacing from enclosure walls, wireways, and adjacent equipment. Allow 50 mm (2 in.) of space on all sides, as shown. This spacing provides ventilation and electrical isolation.

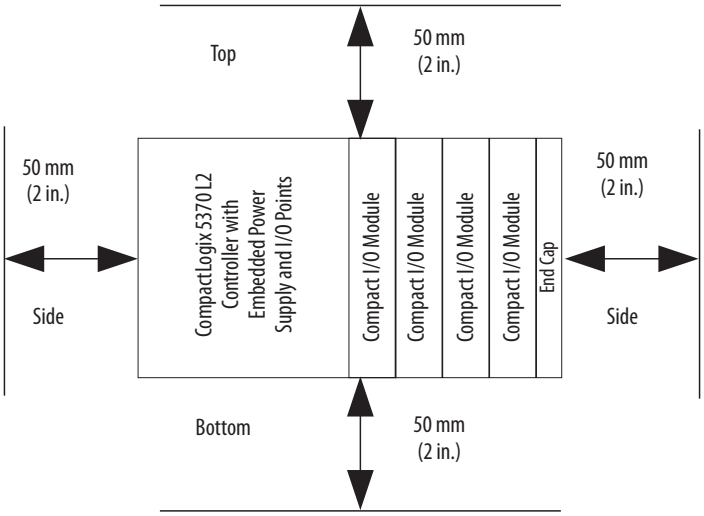

System Dimensions

This graphic shows the system dimensions for the 1769-L24ER-QB1B controller.

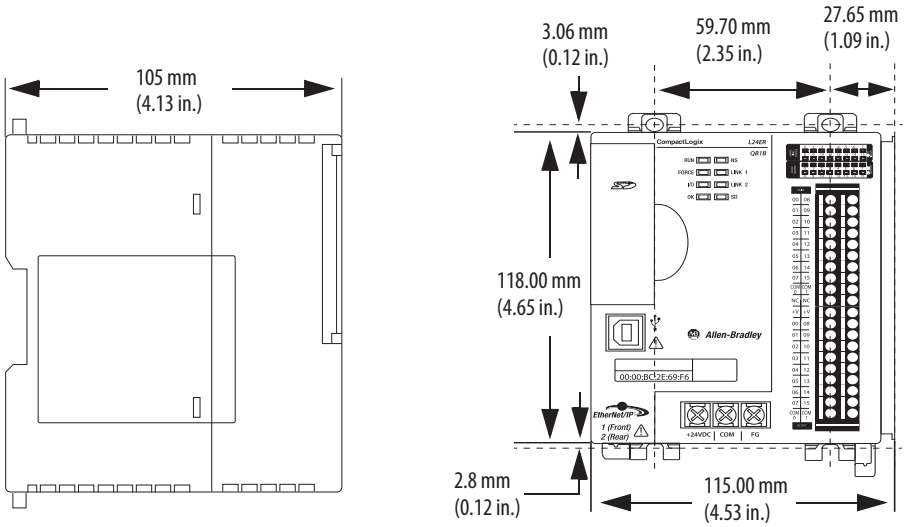

This graphic shows the system dimensions for the 1769-L24ER-QB1B controller with expansion modules installed.

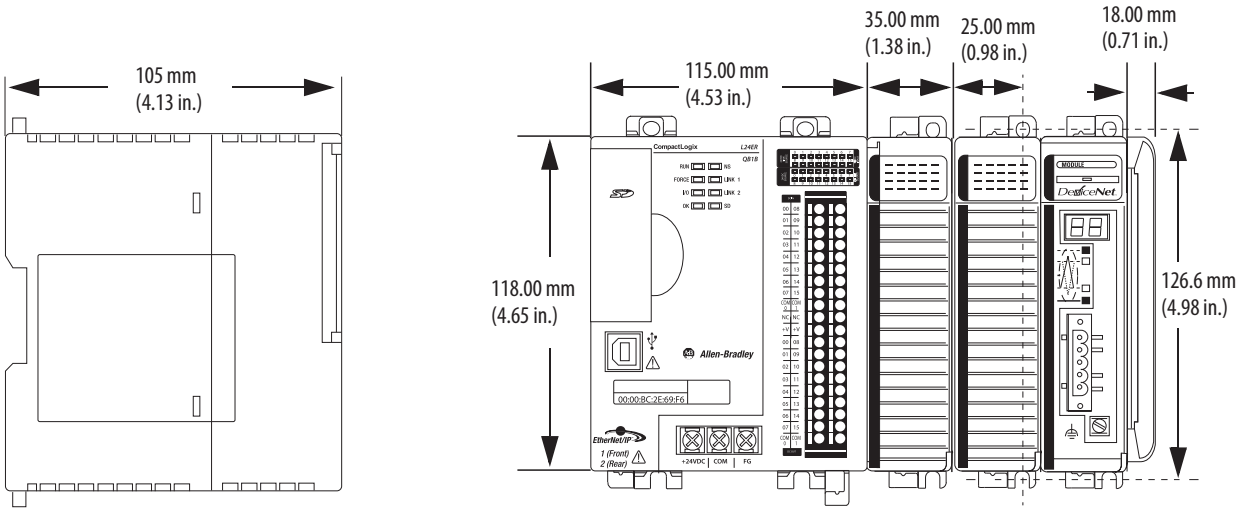

This graphic shows the system dimensions for the 1769-L24ER-QBFC1B controller.

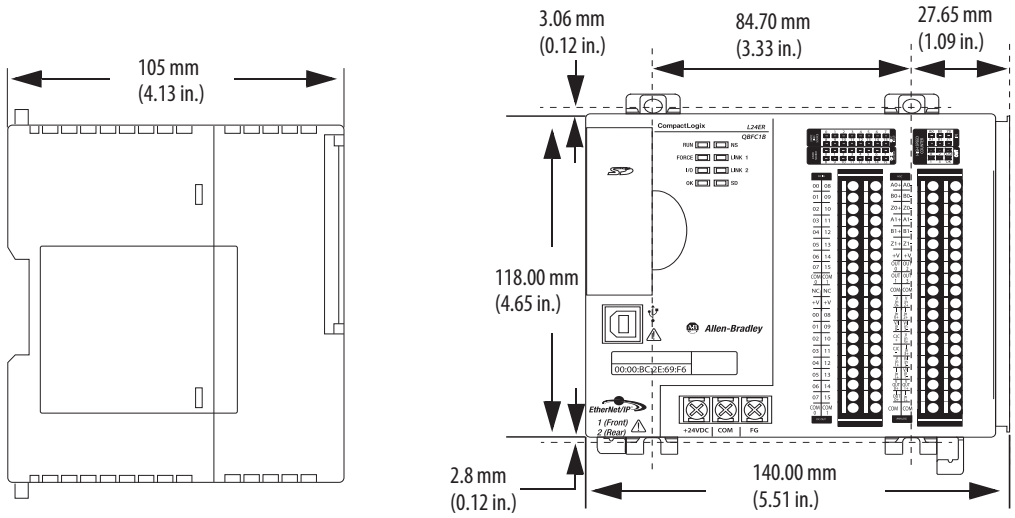

This graphic shows the system dimensions for the 1769-L24ER-QBFC1B controller with expansion modules installed.

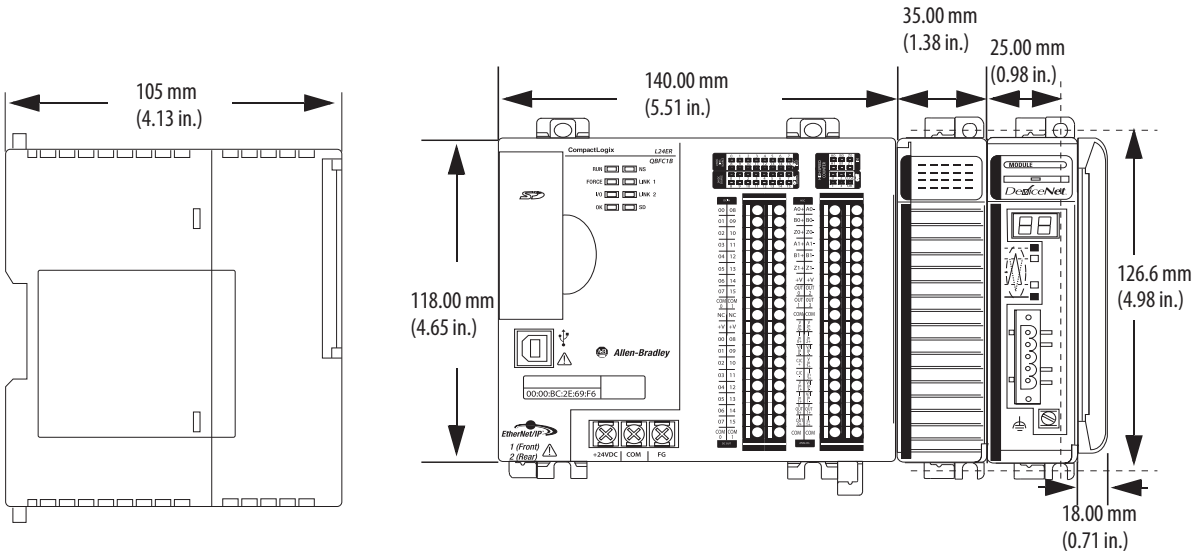

This graphic shows the system dimensions for the 1769-L27ERM-QBFC1B controller.

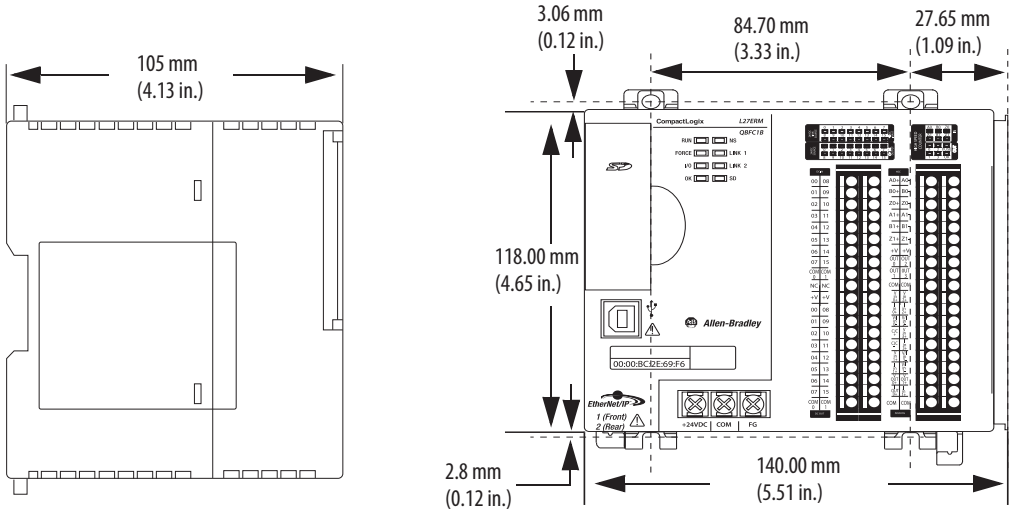

This graphic shows the system dimensions for the 1769-L27ERM-QBFC1B controller with expansion modules installed.

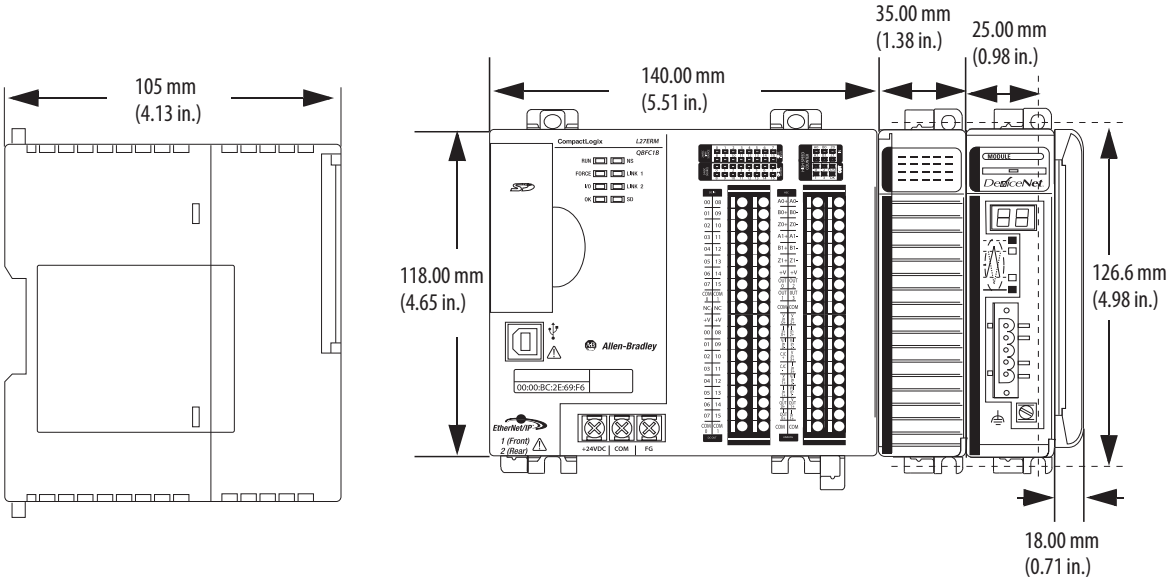

Mount the Controller on a Panel

Use two M4 or #8 pan head screws to mount the controller. Mounting screws are required on every module. Use this procedure to use the assembled modules as a template for drilling holes in the panel.

IMPORTANT Due to module mounting hole tolerance, it is important to follow these procedures.

1. On a clean work surface, assemble no more than three modules.
2. Using the assembled modules as a template, carefully mark the center of all module-mounting holes on the panel.
3. Return the assembled modules to the clean work surface, including any previously mounted modules.
4. Drill and tap the mounting holes for the recommended M4 or #8 screw.
5. Place the modules back on the panel and check for proper hole alignment.

   TIP The grounding plate, that is, where you install the mounting screws, grounds the module when it is panel-mounted.

6. Use the mounting screws to attach the modules to the panel.

   TIP If you are mounting more modules, mount only the last one of this group and put the others aside. This reduces remounting time when you are drilling and tapping the next group of modules.

7. Repeat steps 1…6 for any remaining modules.

Mount the Controller on the DIN Rail

You can mount the controller on the following DIN rails:

- EN 50 022 - 35 x 7.5 mm (1.38 x 0.30 in.)
- EN 50 022 - 35 x 15 mm (1.38 x 0.59 in.)

ATTENTION: This product is grounded through the DIN rail to chassis ground. Use zinc plated yellow-chromate steel DIN rail to assure proper grounding. The use of other DIN rail materials (for example, aluminum or plastic) that can corrode, oxidize, or are poor conductors, can result in improper or intermittent grounding. Secure DIN rail to mounting surface approximately every 200 mm (7.8 in.) and use end-anchors appropriately.

1.)Hook the DIN rail latch at the top of the back of the controller on the DIN rail.
2. Swing the controller downward until it touches the DIN rail and press the controller against the DIN rail until it clicks in place.

Ground the System

ATTENTION: This product is intended to be mounted to a well-grounded mounting surface such as a metal panel. Additional grounding connections from the power supply's mounting tabs or DIN rail (if used) are not required unless the mounting surface cannot be grounded.

See Industrial Automation Wiring and Grounding Guidelines, Rockwell Automation publication 1770-4.1, for additional information.

Install the Controller

Complete these steps to install the controller.

1. Pull out the bottom locking tabs.

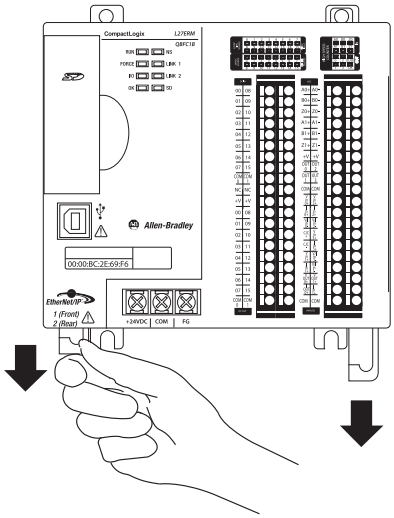

2. Hook the top of the controller on the DIN rail.
3. Swing it downward until the controller is flush against the DIN rail and push it down against the DIN rail.
4. Push the controller against the DIN rail.
5. Push the locking tabs in.

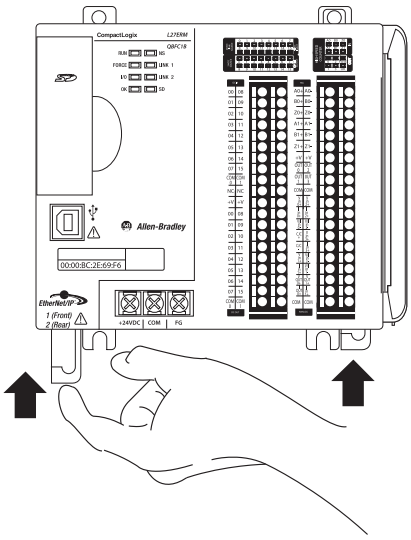

6. If you are not using local expansion modules, slide the 1769-ECR end cap onto the right side of the controller.

IMPORTANT	You must install an end cap onto the right side of the CompactLogix 5370 L2 controller system either at the end of the controller or at the end of any local expansion modules that can be installed onto the controller.

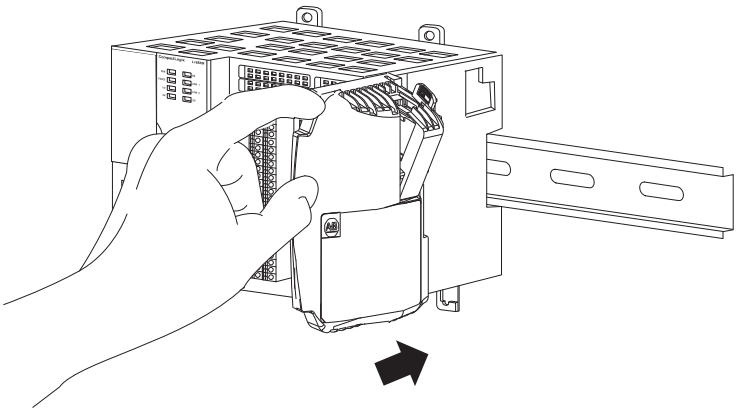

7. Push the end cap locking mechanism to the right to lock it onto the controller.

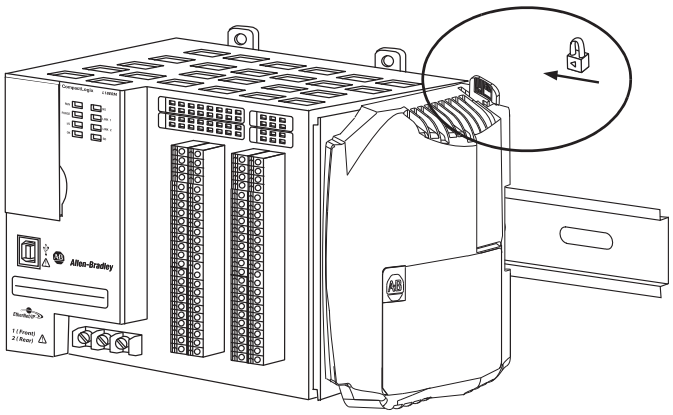

If you are using local expansion modules, see Local Expansion Modules - Optional on page 220 for more information on how to install them in a CompactLogix 5370 L2 control system.

Connect Power to the Control System

You must connect an external Class 2 or SELV-listed power supply to the embedded power supply of the controller. The external power supply converts 115/230V AC power to 24V DC.

WARNING: Do not connect directly to line voltage. Line voltage must be supplied by a suitable, approved isolating transformer or power supply having short circuit capacity not exceeding 100VA maximum or equivalent.

Consider these points before completing the steps in this section:

- This section describes how to connect power only to the embedded power supply of the CompactLogix 5370 L2 controller.

  For information on how to wire the embedded I/O module available on CompactLogix 5370 L2 controllers, see Embedded I/O Modules on page 190.

- Not all Class 2 or SELV-listed power supplies are certified for use in all applications, for example, use in nonhazardous and hazardous environments.

  Before installing an external power supply, consult all specification and certification information to verify that you are using an acceptable external power supply.

- This section describes how to wire terminals +24VDC and COM on the CompactLogix 5370 L2 controller. They are the only terminals you wire to power the CompactLogix 5370 L2 control system.

  Use only the FG terminal when connecting a field device to the controller.

For example purposes, this section uses a 1606-XLDNET4, standard switched-mode power supply.

IMPORTANT The 1606-XLDNET4 power supply is not certified for use in all applications, for example, you cannot use it in hazardous locations. Read the points in Connect Power to the Control System on page 53 before choosing the external power supply for your application.

Complete these steps to connect power to the CompactLogix 5370 L2 control system.

1. Verify that the external 24V DC power source is not powered.
2. Mount the external 24V DC power source on a DIN rail.

   The external 24V DC power source can be installed on the same DIN rail as the controller or a separate DIN rail.

3. Connect wires to the 24V DC+ and 24V DC- connections on the external 24V DC power source.

WARNING: If you connect or disconnect wiring while the field-side power is on, an electrical arc can occur. This could cause an explosion in hazardous location installations. Be sure that power is removed or the area is nonhazardous before proceeding.

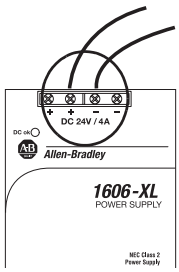

4. Strip 8 mm (0.31 in) insulation from the end of the wire that you connect to the +24VDC terminal on the controller.

5. Connect the wire from the 24VDC+ terminal on the external 24V DC power source to the +24VDC terminal on the controller.

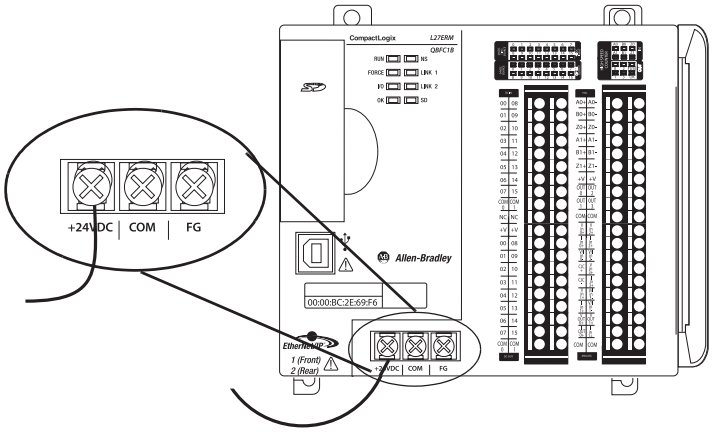

6. Strip 8 mm (0.31 in) insulation from the end of the wire that you connect to the COM terminal on the controller.
7. Connect the wire from the 24V DC- terminal on the external 24V DC power source to the COM terminal on the controller.

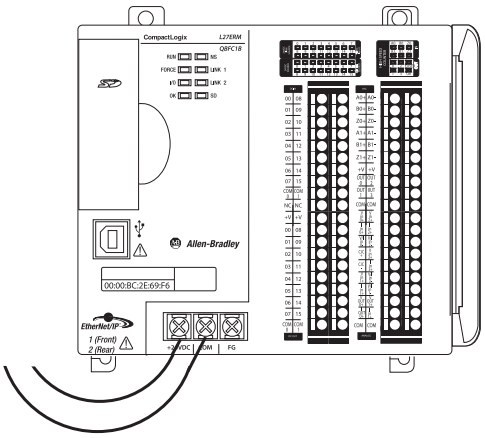

IMPORTANT If your application requires a power control device, for example, a switch or relay, between the external power supply and the embedded power supply of the CompactLogix 5370 L2 controller to control when the controller is powered, you must install the power control device at the +24V DC terminal on the controller.

If you install the power control device at the COM terminal, the CompactLogix 5370 L2 controller cannot power up or power down properly.

The following graphic shows an external 24V DC power source that is connected to a CompactLogix 5370 L2 controller.

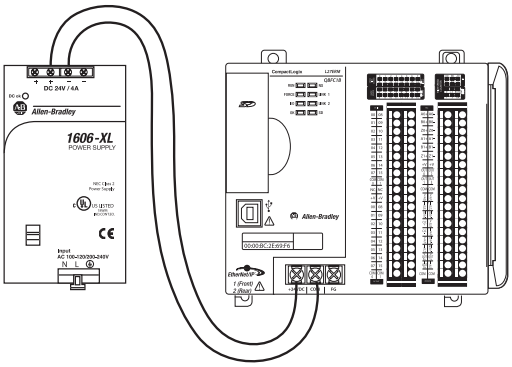

IMPORTANT	When you remove power from the CompactLogix 5370 L2 controller to cycle power, the OK status indicator of the controller remains lit briefly as the controller passes through its shutdown sequence. Do not reapply power from the external power supply to the embedded power supply of the CompactLogix 5370 L2 controller until after the OK status indicator of the controller is off.

Connect to the Controller via a USB Cable

The controller has a USB port that uses a Type B receptacle. The port is USB 2.0-compatible and operates at 12 Mbps.

Use a USB cable to connect your computer to the USB port. With this connection, you can upgrade firmware and download programs to the controller directly from your computer.

ATTENTION: The USB port is intended only for temporary local programming purposes and not intended for permanent connection.

The USB cable is not to exceed 3.0 m (9.84 ft) and must not contain hubs.

WARNING: Do not use the USB port in hazardous locations.

Plug the USB cable into the CompactLogix 5370 L2 controller.

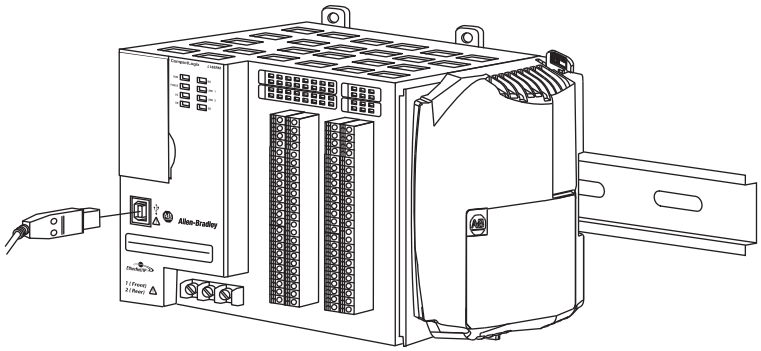

Connect the Controller to an EtherNet/IP Network

WARNING: If you connect or disconnect the communication cable with power applied to this module or any device on the network, an electrical arc can occur. This could cause an explosion in hazardous location installations.

Be sure that power is removed or the area is nonhazardous before proceeding.

Connect the RJ45 connector of the Ethernet cable to one of the Ethernet ports on the controller. The ports are on the bottom of the controller.

ATTENTION: Do not plug a DH-485 network cable or a NAP cable into the Ethernet port. Undesirable behavior and/or damage to the port can result.

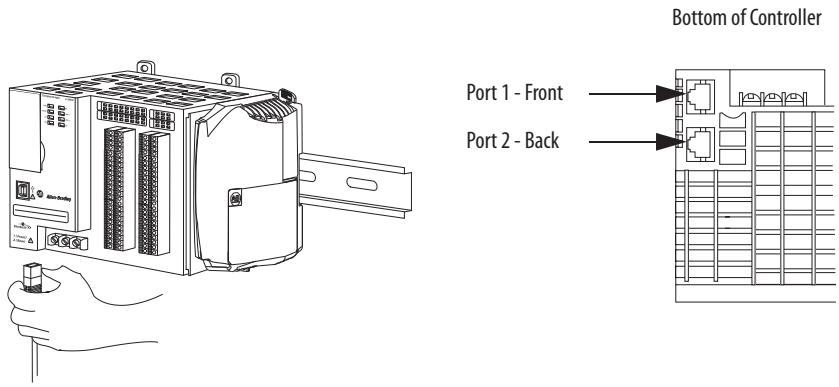

IMPORTANT This example shows how to connect the controller to the network through one port. Depending on the network topology of your application, you can connect both ports of the controller to the EtherNet/IP network.

For more information on EtherNet/IP network topologies, see page 132.

Connecting to Different EtherNet/IP Network Topologies

CompactLogix 5370 L2 controllers have embedded switch technology and two EtherNet/IP ports that let you use it in various EtherNet/IP network topologies:

- Device-level ring network topology - Both ports on the controller are connected to the network.
- Linear network topology - Both ports on the controller are connected to the network.
- Star network topology - One port on the controller is connected to the network.

There are connection and configuration requirements for each EtherNet/IP network topology.

For more information, see EtherNet/IP Network Topologies on page 132.

Install the CompactLogix 5370 L3 Controller

Topic	Page
Before You Begin	62
Install the Secure Digital Card	65
Install the System	67
Connect to the Controller via a USB Cable	76
Connect the Controller to an EtherNet/IP Network	77

ATTENTION: Environment and Enclosure

This equipment is intended for use in a Pollution Degree 2 industrial environment, in overvoltage Category II applications (as defined in IEC 60664-1), at altitudes up to 2000 m (6562 ft) without derating.

This equipment is considered Group 1, Class A industrial equipment according to IEC/CISPR 11. Without appropriate precautions, there may be difficulties with electromagnetic compatibility in residential and other environments due to conducted and radiated disturbances.

This equipment is supplied as open-type equipment. It must be mounted within an enclosure that is suitably designed for those specific environmental conditions that will be present and appropriately designed to prevent personal injury resulting from accessibility to live parts. The enclosure must have suitable flame-retardant properties to prevent or minimize the spread of flame, complying with a flame spread rating of 5VA, V2, V1, V0 (or equivalent) if nonmetallic. The interior of the enclosure must be accessible only by the use of a tool. Subsequent sections of this publication may contain additional information regarding specific enclosure type ratings that are required to comply with certain product safety certifications.

In addition to this publication, see the following:

- Industrial Automation Wiring and Grounding Guidelines, publication 1770-4.1, for additional installation requirements
- NEMA 250 and IEC 60529, as applicable, for explanations of the degrees of protection provided by enclosures

North American Hazardous Location Approval

The following information applies when operating this equipment in hazardous locations.	Informations sur l'utilisation de cet équipement en environnements dangereux.
Products marked "CL I, DIV 2, GP A, B, C, D" are suitable for use in Class I Division 2 Groups A, B, C, D, Hazardous Locations and nonhazardous locations only. Each product is supplied with markings on the rating nameplate indicating the hazardous location temperature code. When combining products within a system, the most adverse temperature code (lowest "T" number) may be used to help determine the overall temperature code of the system. Combinations of equipment in your system are subject to investigation by the local Authority Having Jurisdiction at the time of installation.	Les produits marqués "CL I, DIV 2, GP A, B, C, D" ne conviennent qu'à une utilisation en environnements de Classe I Division 2 Groupes A, B, C, D dangereux et non dangereux. Chaque produit est livré avec des marquages sur sa plaque d'identification qui indiquent le code de température pour les environnements dangereux. Lorsque plusieurs produits sont combinés dans un système, le code de température le plus défavorable (code de température le plus faible) peut être utilisé pour déterminer le code de température global du système. Les combinaisons d'équipements dans le système sont sujettes à inspection par les autorités locales qualifiées au moment de l'installation.
WARNING: EXPLOSION HAZARD - • Do not disconnect equipment unless power has been removed or the area is known to be nonhazardous. • Do not disconnect connections to this equipment unless power has been removed or the area is known to be nonhazardous. Secure any external connections that mate to this equipment by using screws, sliding latches, threaded connectors, or other means provided with this product. • Substitution of components may impair suitability for Class I, Division 2. • If this product contains batteries, they must only be changed in an area known to be nonhazardous.	**AVERTISSEMENT:** RISQUE D'EXPLOSION – • Couper le courant ou s'assurer que l'environnement est classé non dangereux avant de débrancher l'équipement. • Couper le courant ou s'assurer que l'environnement est classé non dangereux avant de débrancher les connecteurs. Fixer tous les connecteurs externes reliés à cet équipement à l'aide de vis, loquets coulissants, connecteurs filetés ou autres moyens fournis avec ce produit. • La substitution de composants peut rendre cet équipement inadapté à une utilisation en environnement de Classe I, Division 2. • S'assurer que l'environnement est classé non dangereux avant de changer les piles.

European Hazardous Location Approval

The following applies when the product bears the Ex Marking.

This equipment is intended for use in potentially explosive atmospheres as defined by European Union Directive 94/9/EC and has been found to comply with the Essential Health and Safety Requirements relating to the design and construction of Category 3 equipment intended for use in Zone 2 potentially explosive atmospheres, given in Annex II to this Directive.

Compliance with the Essential Health and Safety Requirements has been assured by compliance with EN 60079-15 and EN 60079-0.

ATTENTION: This equipment is not resistant to sunlight or other sources of UV radiation.

WARNING:

- This equipment must be installed in an enclosure providing at least IP54 protection when applied in Zone 2 environments.
- This equipment shall be used within its specified ratings defined by Rockwell Automation.
- Provision shall be made to prevent the rated voltage from being exceeded by transient disturbances of more than 40% when applied in Zone 2 environments.
- Secure any external connections that mate to this equipment by using screws, sliding latches, threaded connectors, or other means provided with this product.
- Do not disconnect equipment unless power has been removed or the area is known to be nonhazardous.
- Enclosure must be marked with the following: "Warning - Do not open when energized." After installation of equipment into the enclosure, access to termination compartments shall be dimensioned so that conductors can be readily connected.

ATTENTION: Prevent Electrostatic Discharge

This equipment is sensitive to electrostatic discharge, which can cause internal damage and affect normal operation. Follow these guidelines when you handle this equipment:

- Touch a grounded object to discharge potential static.
- Wear an approved grounding wriststrap.
- Do not touch connectors or pins on component boards.
- Do not touch circuit components inside the equipment.
- Use a static-safe workstation, if available.
- Store the equipment in appropriate static-safe packaging when not in use.

Before You Begin

Consider the following when planning your CompactLogix 5370 L3 control system:

- The controller is the leftmost device in the system.
- Only one controller can be used on a local 1769 CompactBus. The controller supports the local bank and up to two more banks.
- The controller has a power supply distance rating of four. This rating means that the controller must be within four slots of the power supply. You can install as many as three modules between the power supply and the controller, as shown in the following graphic.

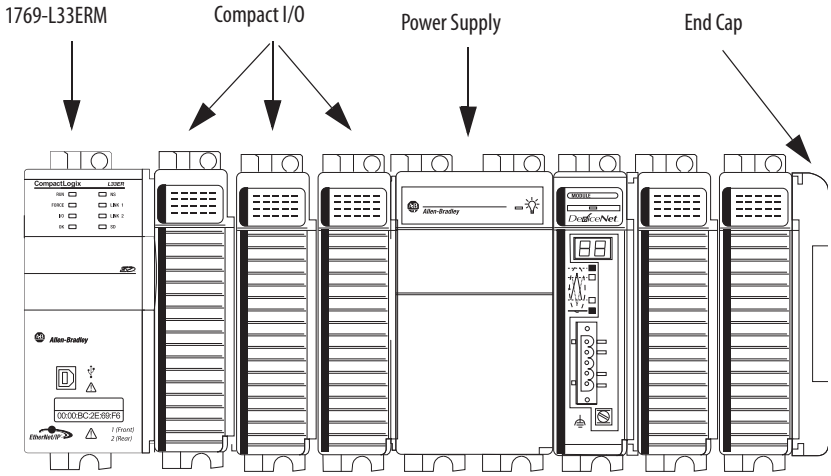

- The controllers support this many local expansion modules across multiple I/O banks.

Cat. No.	Local Expansion Modules Supported, max
1769- L30ER 1769-L30ERM 1769-L30ER-NSE	8
1769-L33ER 1769-L33ERM	16
1769-L36ERM	30

- Each I/O bank requires its own power supply.

- You must terminate the end of the last bank in a CompactLogix 5370 L3 control system. You can terminate a bank at the left or right end of the bank dependent upon your system design.

  A 1769-EC*x* end cap is required to terminate the end of the last bank in the control system.

  For example, if a CompactLogix 5370 L3 control system uses one bank, you must use a 1769-ECR right end cap to terminate the right end of the bank.

  For graphics of CompactLogix 5370 L3 control systems that use one bank or multiple banks, see Mount the System on page 70.

ATTENTION: The CompactLogix 5370 L3 control systems do not support removal and insertion under power (RIUP). These events occur while the CompactLogix system is under power:

- Any break in the connection between the power supply and the controller, for example, removing the power supply, controller, or an I/O module, can subject the logic circuitry to transient conditions above the normal design thresholds and can result in damage to system components or unexpected behavior.
- Removing an end cap or an I/O module faults the controller and can also result in damage to system components.

CompactLogix 5370 L3 Controller Parts

These parts are included in the box when you order your controller:

- Controller - Specific catalog number varies by order
- 1784-SD1 Secure Digital (SD) card with 1 GB of memory storage

  A 1784-SD2 SD card with 2 GB of memory storage, or more 1784-SD1 SD cards, are also available if you need more memory.

IMPORTANT The life expectancy of nonvolatile media is dependent on the number of write cycles that are performed. Nonvolatile media use a wear leveling technique or technology for prolonging the service life, but avoid frequent writes.

Avoid frequent writes when logging data. We recommend that you log data to a buffer in the memory of your controller and limit the number of times data is written to removable media.

Installation Summary

To install a CompactLogix 5370 L3 controller, follow these steps.

- Install the Secure Digital Card
- Install the System
- Connect to the Controller via a USB Cable.
- Connect the Controller to an EtherNet/IP Network.

Install the Secure Digital Card

The CompactLogix 5370 L3 **controllers ship** from the factory with the 1784-SD1 **SD card installed**.

Complete these steps to reinstall an SD card that has been removed from the controller back into the controller or to install a new SD card into the controller.

It is recommended that you leave the SD card in the controller, even when it is not used. If the controller experiences a Major Non-recoverable Fault, extended fault information is saved to the card.

WARNING: When you insert or remove the Secure Digital (SD) Card while power is on, an electrical arc can occur. This could cause an explosion in hazardous location installations.

Be sure that power is removed or the area is nonhazardous before proceeding.

1. Verify that the SD card is locked or unlocked according to your preference. Consider the following when deciding to lock the card before installation:
   - If the card is unlocked, the controller can write data to it or read data from it.

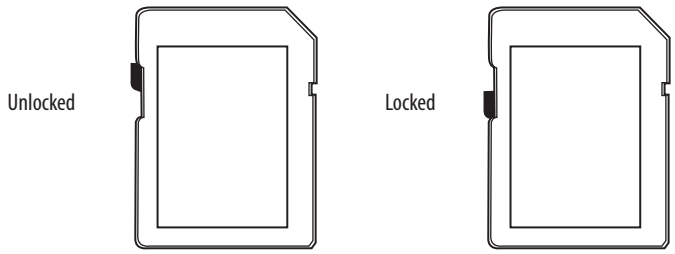

2. Open the door for the SD card.

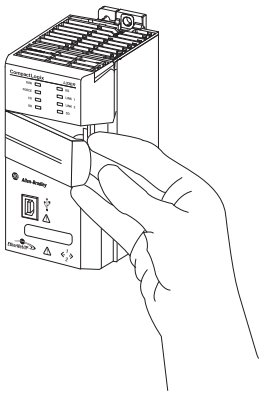

3. Insert the SD card into the SD card slot.

   You can install the SD card in only one orientation. The beveled corner is at the top. An orientation logo is printed on the card.

   If you feel resistance when inserting the SD card, pull it out and change the orientation.

4. Gently press the card until it clicks into place.

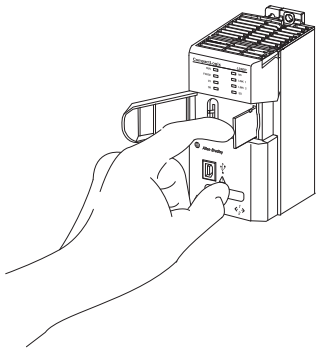

5. Close the SD card door.

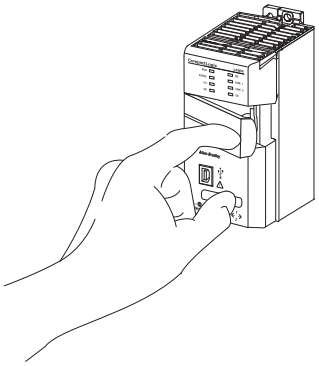

We recommend that you keep the SD card door closed during normal system operation. For more information on using the SD card, see Use a Secure Digital Card on page 301.

Install the System

Complete the following steps to install the CompactLogix 5370 L3 control system.

- Assemble the System
- Mount the System
- Ground the System
- Connect Power to the Control System

Assemble the System

You can attach an adjacent Compact I/O module or 1769 Compact I/O power supply to a CompactLogix 5370 L3 controller before or after mounting. For mounting instructions, see Ground the System on page 73 or Mount the Controller on a Panel on page 73.

ATTENTION: Do not remove or replace this module while power is applied. Interruption of the backplane can result in unintentional operation or machine motion.

WARNING: Remove power before removing or inserting this module. If you insert or remove the module while backplane power is on, an electrical arc can occur. This could cause an explosion in hazardous location installations.

Be sure that power is removed or the area is nonhazardous before proceeding.

This section describes how to assemble a local bank.

Complete these steps to install the controller. This example describes how to attach a 1769 Compact I/O power supply to the controller.

1. Verify that line power is disconnected.
2. Make sure that the bus lever of the 1769 Compact I/O power supply is in the unlocked position, that is, leaning to the right.

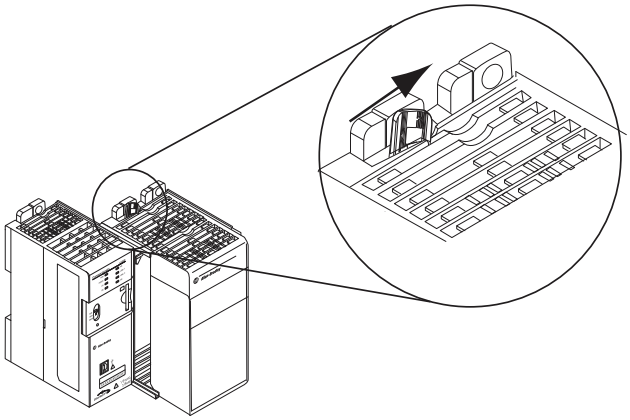

3. Use the upper and lower tongue-and-groove slots to secure the controller and power supply together.

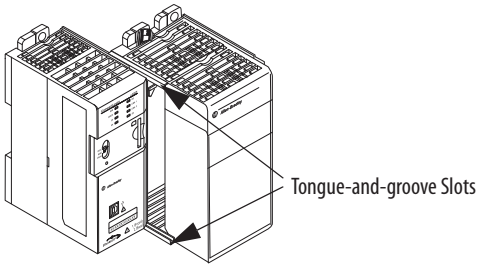

4. Move the power supply back along the tongue-and-groove slots until the bus connectors align with each other.
5. Use your fingers or a small screwdriver to push the bus lever of the power supply back slightly to clear the positioning tab.

6. Move the bus lever of the power supply fully to the left until it clicks; making sure that it locks.

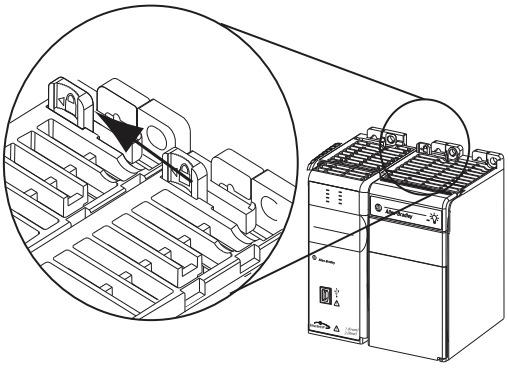

7. If your system does not use any local expansion modules, use the tongue-and-groove slots described earlier to attach a 1769-ECR Compact I/O end cap terminator to the last module in the system.

IMPORTANT	You must install an end cap onto the right side of the CompactLogix 5370 L3 controller system either at the end of the controller or at the end of any local expansion modules that can be installed onto the controller.

8. Wire the 1769 Compact I/O power supply according to the directions in the Compact I/O Expansion Power Supplies installation instructions, publication 1769-IN028.

   If you are using local expansion modules, see Local Expansion Modules on page 242.

Mount the System

You can mount a CompactLogix 5370 L3 control system on a DIN rail or on a panel.

ATTENTION: During panel or DIN rail mounting of all devices, be sure that all debris (such as metal chips or wire strands) is kept from falling into the controller. Debris that falls into the controller could cause damage while the controller is energized.

A CompactLogix 5370 L3 control system must be mounted so that the modules are horizontal to each other. If you separate modules into multiple banks, the banks can be vertical or horizontal to each other.

Figure 1 shows example systems with local expansion modules included.

Figure 1 - Example CompactLogix 5370 L3 Control Systems

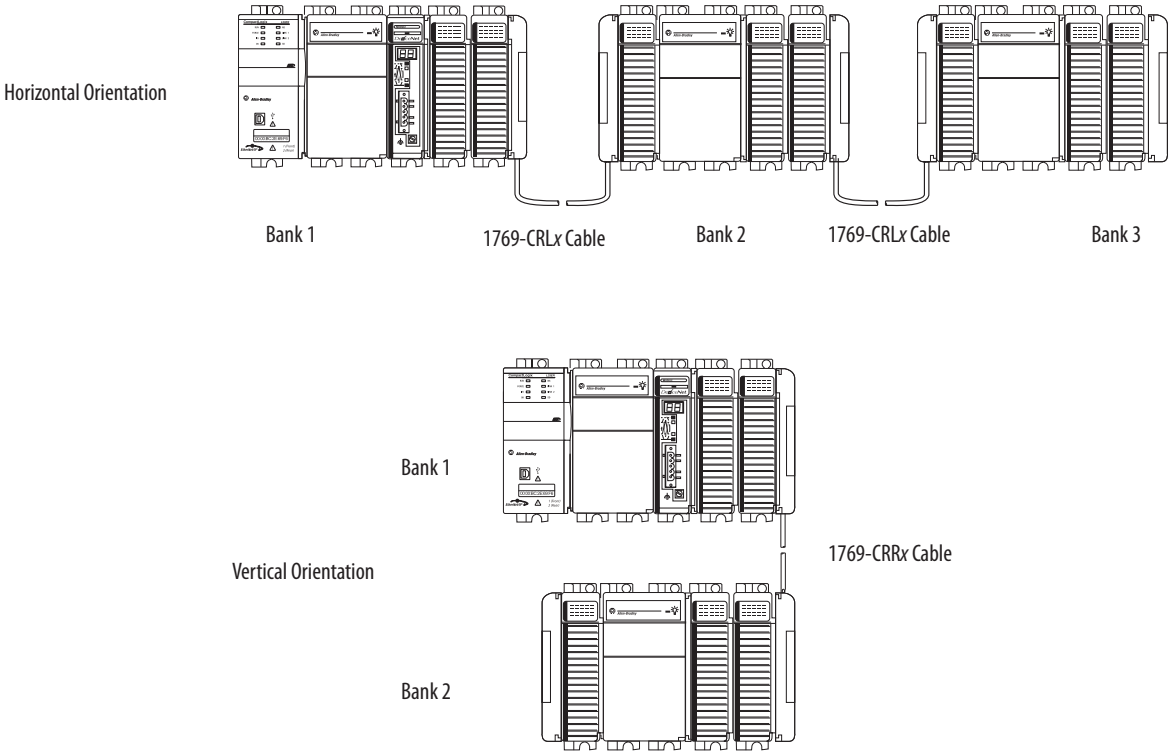

Before you mount a CompactLogix 5370 L3 control system, consider the following:

- Minimum Spacing
- System Dimensions
- Power Supply Distance Rating

Minimum Spacing

Maintain spacing from enclosure walls, wireways, and adjacent equipment. Allow 50 mm (2 in.) of space on all sides, as shown. This spacing provides ventilation and electrical isolation.

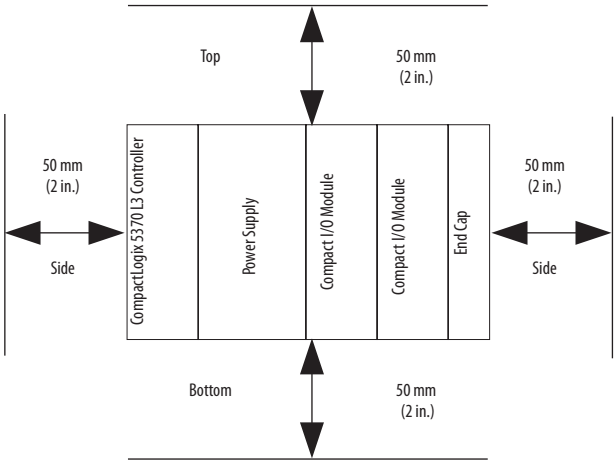

System Dimensions

This graphic shows the system dimensions.

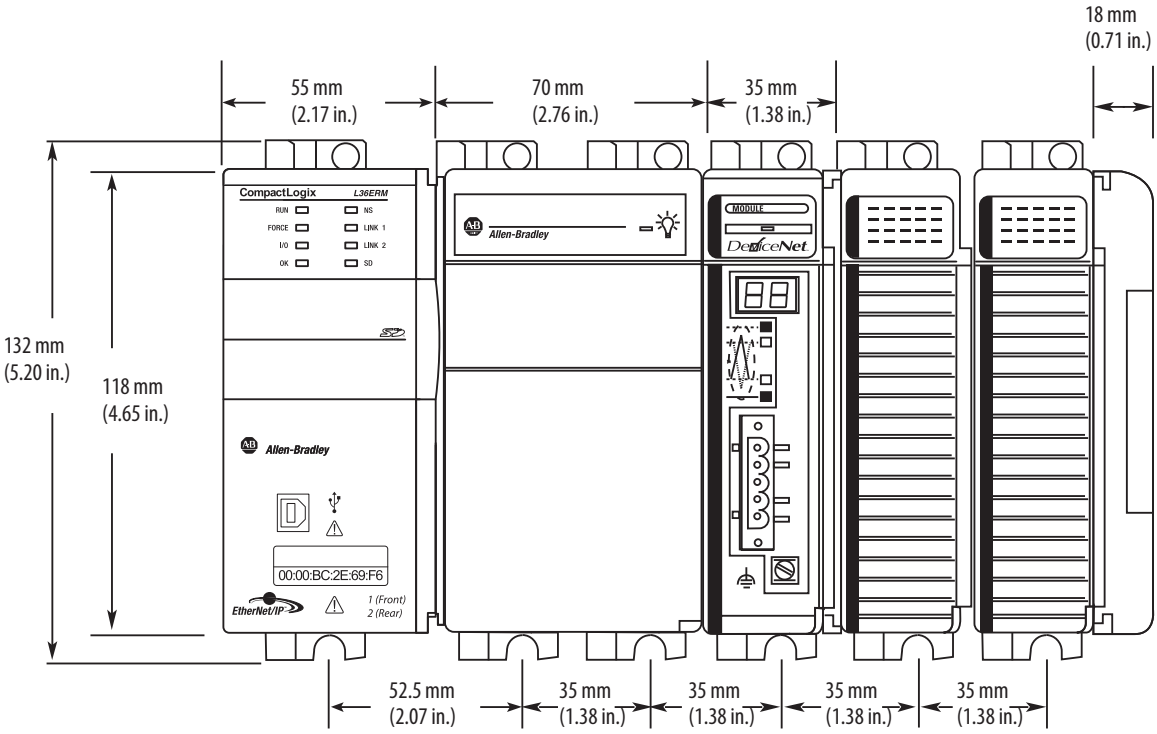

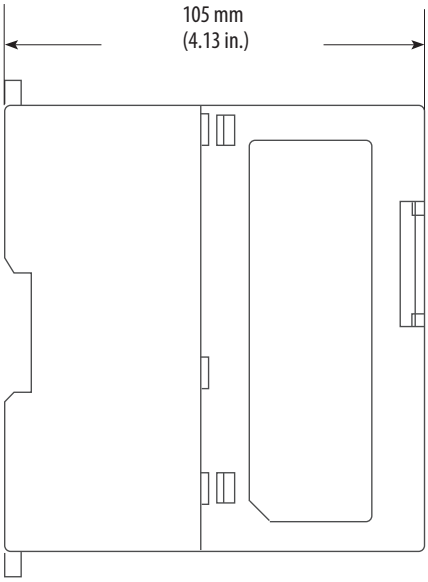

Power Supply Distance Rating

CompactLogix 5370 L3 controllers and the Compact I/O modules have power supply distance ratings. Power supply distance ratings determine how many slots in a bank that a device can be from the power supply.

For example, a product with a power supply distance rating of four can only have up to three slots between it and the power supply.

Device	Power Supply Distance Rating
CompactLogix 5370 L3 controller 1769 Compact I/O DeviceNet scanner	4
Compact I/O module	4. . .8, depending on module For more information about the power supply distance rating for a Compact I/O module, see CompactLogix Selection Guide, publication 1769-SG001

CompactLogix 5370 L3 controllers must be the leftmost device in the control system, and the system only enables up to three modules between the controller and the power supply. This graphic shows an example configuration.

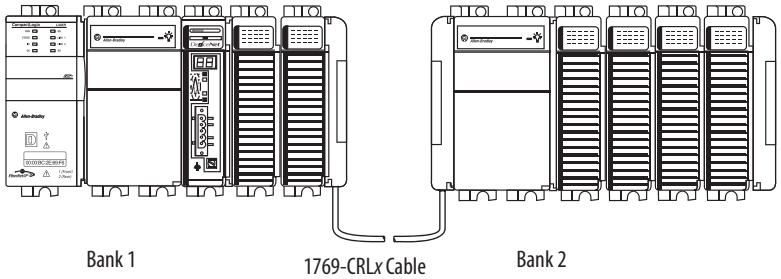

Ground the System

ATTENTION: This product is intended to be mounted to a well-grounded mounting surface such as a metal panel. Additional grounding connections from the power supply's mounting tabs or DIN rail (if used) are not required unless the mounting surface cannot be grounded.

See Industrial Automation Wiring and Grounding Guidelines, Rockwell Automation publication 1770-4.1, for additional information.

For more information, see the Industrial Automation Wiring and Grounding Guidelines, publication 1770-4.1.

Mount the Controller on a Panel

Use two M4 or #8 pan head screws to mount the controller. Mounting screws are required on many modules. Use this procedure to use the assembled modules as a template for drilling holes in the panel.

IMPORTANT Due to module mounting hole tolerance, it is important to follow these procedures.

1. On a clean work surface, assemble no more than three modules.
2. Using the assembled modules as a template, carefully mark the center of all module-mounting holes on the panel.
3. Return the assembled modules to the clean work surface, including any previously mounted modules.
4. Drill and tap the mounting holes for the recommended M4 or #8 screw.
5. Place the modules back on the panel and check for proper hole alignment.

   TIP The grounding plate, that is, where you install the mounting screws, grounds the module when it is panel-mounted.

6. Use the mounting screws to attach the modules to the panel.

   TIP If you are mounting more modules, mount only the last one of this group and put the others aside. This reduces remounting time when you are drilling and tapping the next group of modules.

7. Repeat steps 1…6 for any remaining modules.

Mount the Controller on the DIN Rail

You can mount the controller on the following DIN rails:

- EN 50 022 - 35 x 7.5 mm (1.38 x 0.30 in.)
- EN 50 022 - 35 x 15 mm (1.38 x 0.59 in.)

ATTENTION: This product is grounded through the DIN rail to chassis ground. Use zinc plated yellow-chromate steel DIN rail to assure proper grounding. The use of other DIN rail materials (for example, aluminum or plastic) that can corrode, oxidize, or are poor conductors, can result in improper or intermittent grounding. Secure DIN rail to mounting surface approximately every 200 mm (7.8 in.) and use end-anchors appropriately.

1. Before mounting the controller on a DIN rail, close the DIN rail latches of the controller.
2. Press the DIN rail mounting area of the controller against the DIN rail.

   The latches momentarily open and lock into place.

Connect Power to the Control System

Connect power to the CompactLogix 5370 L3 control system that is based on the 1769 Compact I/O power supply your application uses. For more information on connecting power to your CompactLogix 5370 L3 control system, see the Compact I/O Expansion Power Supplies Installation Instructions, publication 1769-IN028.

Connect to the Controller via a USB Cable

The controller has a USB port that uses a Type B receptacle. The port is USB 2.0-compatible and operates at 12 Mbps.

Use a USB cable to connect your computer to the USB port. With this connection, you can upgrade firmware and download programs to the controller directly from your computer.

ATTENTION: The USB port is intended only for temporary local programming purposes and not intended for permanent connection.

The USB cable is not to exceed 3.0 m (9.84 ft) and must not contain hubs.

WARNING: Do not use the USB port in hazardous locations.

Plug the USB cable into the CompactLogix 5370 L3 controller as shown.

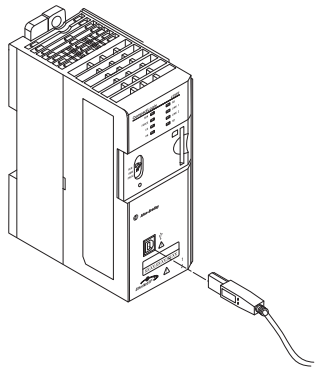

Connect the Controller to an EtherNet/IP Network

WARNING: If you connect or disconnect the communication cable with power applied to this module or any device on the network, an electrical arc can occur. This could cause an explosion in hazardous location installations.

Be sure that power is removed or the area is nonhazardous before proceeding.

Connect the RJ45 connector of the Ethernet cable to one of the Ethernet ports on the controller. The ports are on the bottom of the controller.

ATTENTION: Do not plug a DH-485 network cable or a NAP cable into the Ethernet port. Undesirable behavior or damage to the port can result.

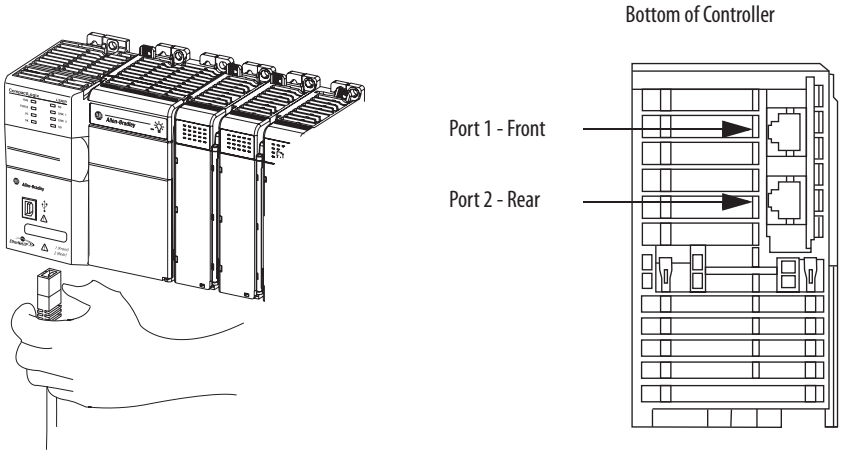

IMPORTANT This example shows how to connect the controller to the network through one port. Depending on the Ethernet network topology of your application, you can connect both ports of the controller to the EtherNet/IP network.

For more information on EtherNet/IP network topologies, see page 132.

Connecting to Different EtherNet/IP Network Topologies

The CompactLogix 5370 L3 controllers have embedded switch technology and two EtherNet/IP ports that let you use it in different EtherNet/IP network topologies:

- Device-level Ring network topology - Both ports on the controller are connected to the network with requirements about how the connections are made.
- Linear network topology - Both ports on the controller are connected to the network with requirements about how the connections are made.
- Star network topology - One port on the controller is connected to the network.

For more information, see EtherNet/IP Network Topologies on page 132.

Complete Software Tasks Required at CompactLogix 5370 Controller Installation

Topic	Page
Set the IP Address of a Controller	81
Change the IP Address of a Controller	96
Load the Controller Firmware	100
Select the Operating Mode of the Controller	113

To complete the tasks that are described in this chapter, you must have the software that is described in the following table installed on your computer.

Software	Required Version
RSLinx® Classic	2.59.00 or later(1)
RSLogix 5000	20.*xx.xx* - For CompactLogix 5370 controllers using firmware revision 20.*xxx*.
Studio 5000 environment	21.00.00 or later - For CompactLogix 5370 controllers using firmware revision 21.000 or later.
BOOTP-DHCP server	Most current version is installed with RSLinx Classic software installation
ControlFLASH™	Installed with the installation of one of the following: • RSLogix 5000 software, version 20.*xx.xx* • Studio 5000 environment, version 21.00.00 or later

(1) CompactLogix 5370 L2 controllers require RSLinx Classic software, version 2.59.01 or later.

CompactLogix 5370 controllers require a network Internet Protocol (IP) address to operate on an EtherNet/IP network.

The IP address uniquely identifies the controller. The IP address is in the form *xxx.xxx.xxx.xxx* where each *xxx* is a number from 000…254 with some exceptions for reserved values. These numbers are **examples** of reserved values you cannot use:

- 000.*xxx.xxx.xxx*
- 127.*xxx.xxx.xxx*
- 224 to 255.*xxx.xxx.xxx*

Some other values are reserved based on an application-by-application basis.

You can complete one of these tasks dependent on system conditions:

- **Set** the IP address for a controller that does not have one assigned.
- **Change** the IP address for a controller that has an IP address that is assigned to it.

IMPORTANT	CompactLogix 5370 controllers have two EtherNet/IP ports to connect to an EtherNet/IP network. The ports carry the same network traffic as part of the embedded switch of the controller. However, the controller uses only one IP address.

Set the IP Address of a Controller

You must set the IP address of a CompactLogix 5370 controller when the controller powers up for the first time, that is, when commissioning the controller for the first time. You are not required to set an IP address each time that power is cycled to the controller.

You can use these tools to **set** the IP address of a CompactLogix 5370 controller:

- Bootstrap Protocol (BOOTP) server
- Dynamic Host Configuration Protocol (DHCP) server
- RSLinx Classic software
- Logix Designer application
- SD card

IMPORTANT Each tool has connection requirements to set the IP address of the controller via that tool. For example, your computer must be connected to the controller via a USB cable to set the initial IP address of the controller with RSLinx Classic software or the application.

This graphic describes how to set the IP address of your CompactLogix 5370 controller on a power cycle during initial installation or after operation has begun.

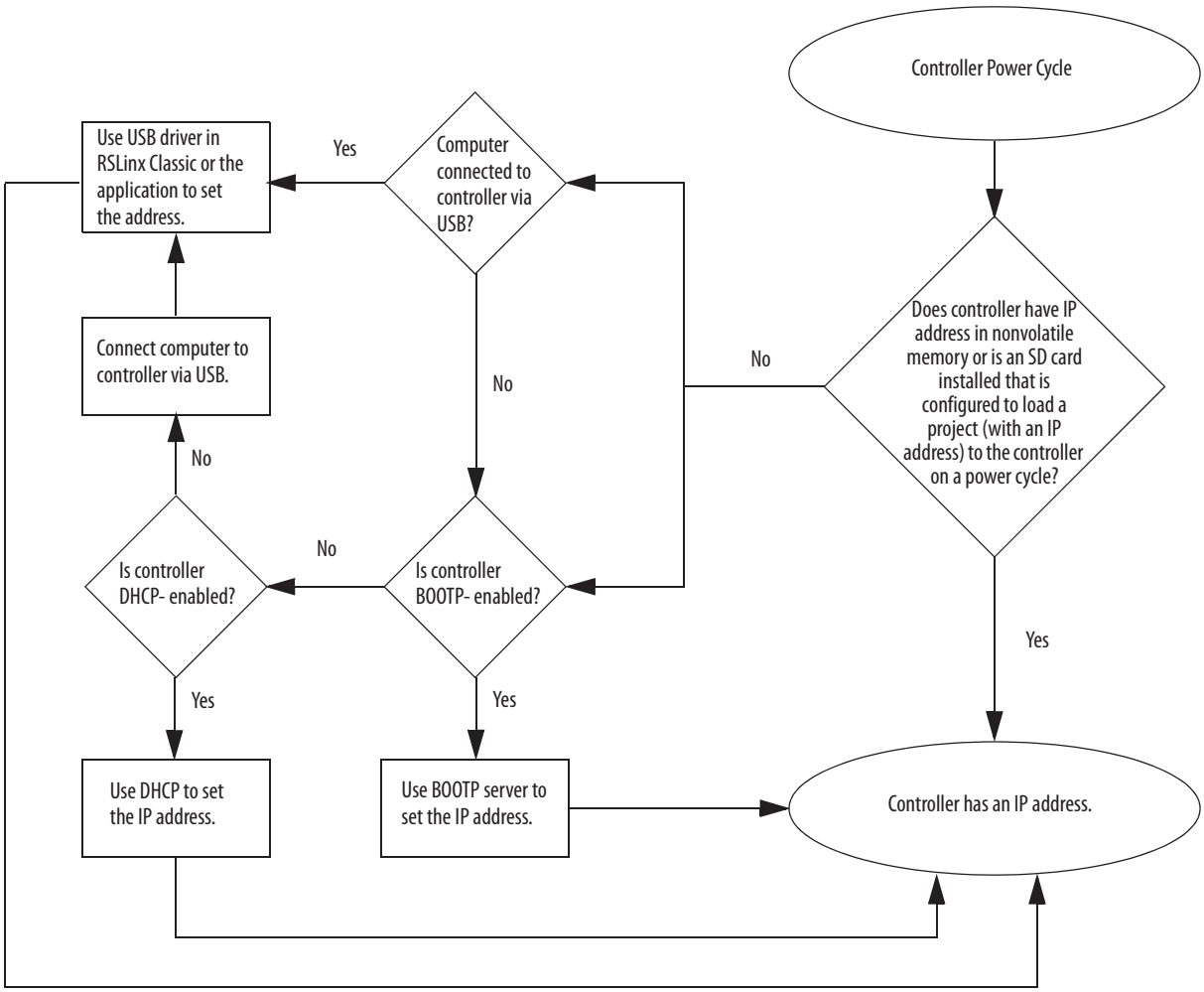
Controller Power Cycle
Does controller have IP address in nonvolatile memory or is an SD card installed that is configured to load a project (with an IP address) to the controller on a power cycle?
No
Yes
Controller has an IP address.
Computer connected to controller via USB?
Yes
No
Use USB driver in RSLinx Classic or the application to set the address.
Connect computer to controller via USB.
No
Is controller BOOTP- enabled?
No
Yes
Use BOOTP server to set the IP address.
Is controller DHCP- enabled?
Yes
Use DHCP to set the IP address.

Use the BOOTP Server to Set the IP Address of the Controller

Bootstrap Protocol (BOOTP) is a protocol that enables the controller to communicate with a BOOTP server. The server can be used to assign an IP address. You can use the BOOTP server to set an IP address for your CompactLogix 5370 controller.

Consider these points when using the BOOTP server:

- The BOOTP server is installed automatically when you install RSLinx Classic or the Studio 5000 environment on your computer. The BOOTP server sets an IP address and other Transmission Control Protocol (TCP) parameters.
- A CompactLogix 5370 controller ships from the factory without an IP address and BOOTP-enabled.
- This section describes how to use a Rockwell Automation BOOTP/DHCP server. If you use another BOOTP/DHCP server, contact your network administrator to verify that you are using it correctly.
- To use the BOOTP server, your computer and the controller must be connected to the same EtherNet/IP network.
- If the controller is BOOTP-disabled, you cannot use the BOOTP server to set the IP address.

There are two conditions in which the CompactLogix 5370 controllers use the BOOTP servers to set the IP address of the controller:

- **Initial powerup** - Because the CompactLogix 5370 controller ships with BOOTP-enabled, when it is first powered up, the controller sends a request for an IP address on the EtherNet/IP network. You can use the BOOTP server to set the IP address, as described later in this section.
- **Powerup after controller operation has begun** - When controller power is cycled after operation has begun, the BOOTP/DHCP server sets the IP address if one of these conditions exists:
  - Controller is BOOTP-enabled - You set the IP address manually with the BOOTP server.
  - Controller is DHCP-enabled - The IP address is set automatically via the DHCP server.

Access the BOOTP/DHCP utility from one of these locations:

- Start>Programs>Rockwell Software>BOOTP-DHCP Server

  If you have not installed the utility, you can download and install it from http://www.ab.com/networks/ethernet/bootp.html.

- Tools directory on the programming software installation CD

IMPORTANT Before you start the BOOTP/DHCP utility, make sure that you have the hardware (MAC) address of the controller. The hardware address is on the front of the controller and uses an address in a format similar to the following:

00:00:BC:2E:69:F6

1769-L18ERM-BB1B Controller

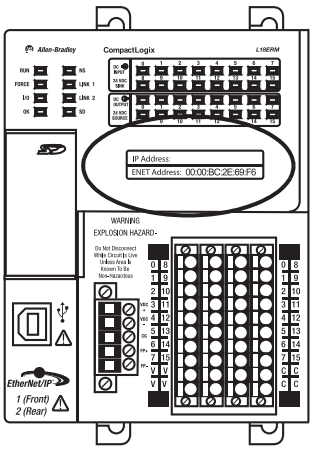

1769-L24ER-QB1B Controller

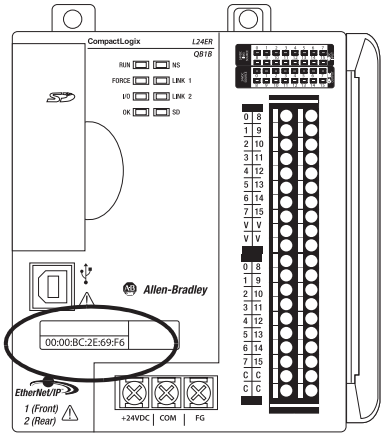

1769-L33ER Controller

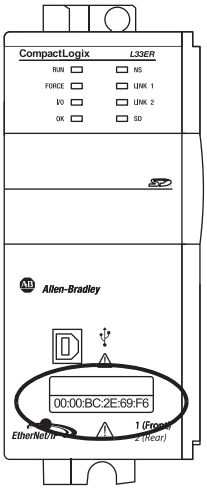

Complete these steps to set the IP address of the controller with the BOOTP/DHCP server.

IMPORTANT To use the BOOTP server, your computer and the controller must be connected to the same EtherNet/IP network.

1. Start the BOOTP/DHCP software.
2. From the Tools menu, choose Network Settings.

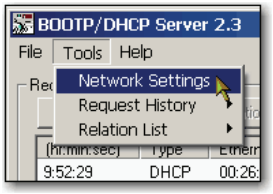

3. Type the Subnet Mask of the network.

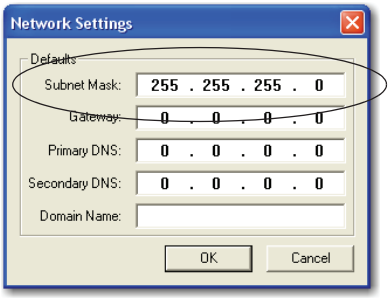

The Gateway address, Primary or Secondary DNS address, and Domain Name fields are optional.

4. Click OK.

The Request History panel appears with the hardware addresses of all devices that issue BOOTP requests. This process can take some time to complete.

5. Select the appropriate module.

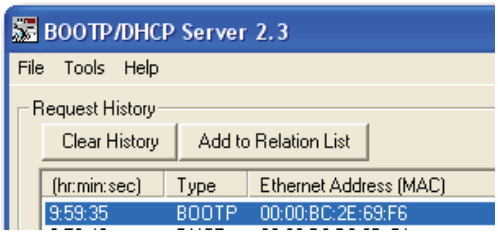

6. Click Add to Relation List.

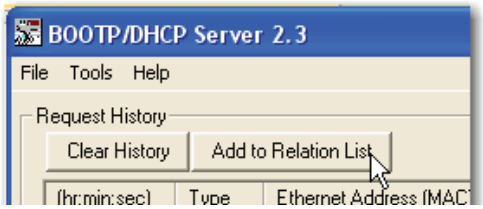

The New Entry dialog box appears.

7. Type an IP Address, Hostname, and Description for the controller.

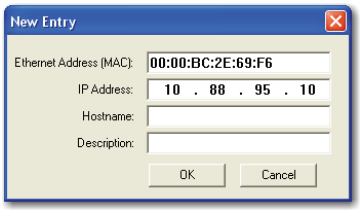

8. Click OK.
9. To assign this configuration to the controller, wait for the controller to appear in the Relation List panel and select it.
10. Click Disable BOOTP/DHCP.

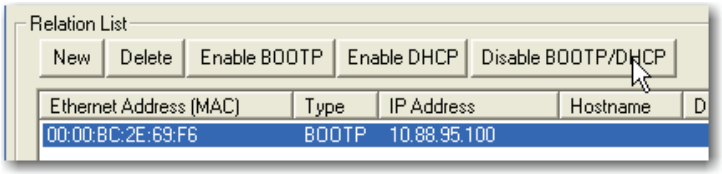

When power is cycled, the controller uses the assigned configuration and does not issue a BOOTP request.

IMPORTANT	If you do not click Disable BOOTP/DHCP on a power cycle, the host controller clears the current IP configuration and begins sending BOOTP requests again.

If you click Disable BOOTP/DHCP and it does not disable BOOTP/DHCP, use RSLinx or the Studio 5000 environment to disable BOOTP/DHCP.

To disable BOOTP/DHCP from RSLinx, perform the following:

1. Make sure that a USB cable is connected to your computer and the controller.
2. Start RSLinx Classic software.

   After several seconds, an RSWho dialog box appears.

3. If no RSWho dialog box appears, from the Communications pull-down menu, choose RSWho.

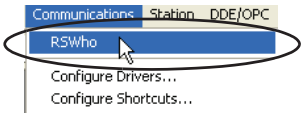

4. Navigate to the USB network
5. Right-click on the controller and choose Module Configuration.

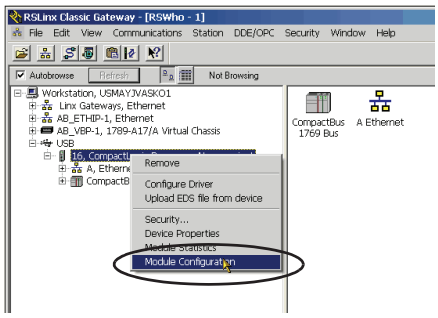

6. Click the Port Configuration tab.
7. From the Network Configuration Type, click Static to disable BOOTP/DHCP.

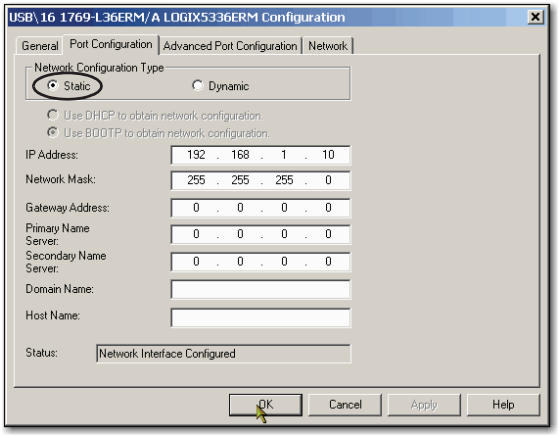

8. Click OK.

To disable BOOTP/DHCP from the Studio 5000 environment, perform the following:

1. Start the application.
2. Open the project.

3. Right-click on the controller and choose Properties.

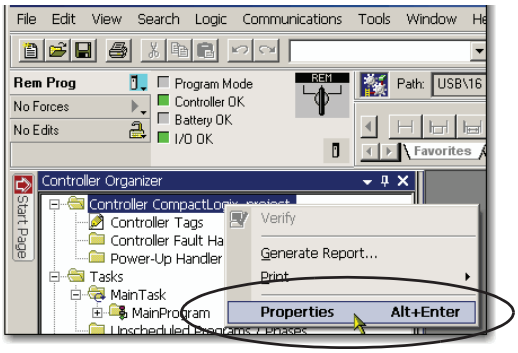

4. On the Controller Properties dialog box, click the Internet Protocol tab.
5. Click Manually configure IP settings.

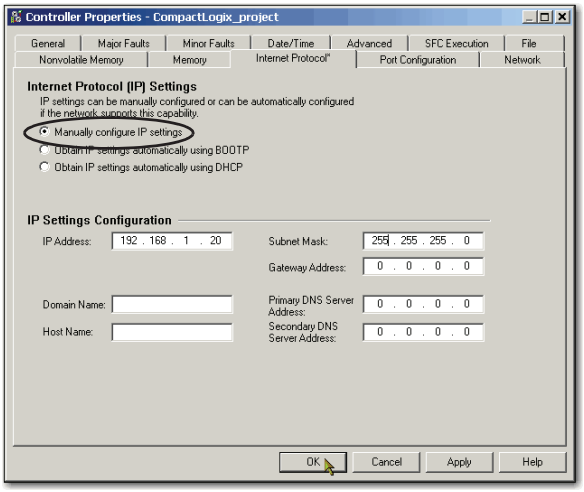

6. Click OK.
7. When prompted to confirm the IP address setting, click Yes.

Using DHCP Software

Dynamic Host Configuration Protocol (DHCP) software automatically assigns IP addresses to client stations logging on to a TCP/IP network. DHCP is based on BOOTP and maintains some backward compatibility. The main difference is that BOOTP allows for manual configuration (static), while DHCP allows for both static and dynamic allocation of network addresses and configurations to newly attached modules.

Be cautious when using DHCP software to configure a module. A BOOTP client, such as the EtherNet/IP communication modules, can start from a DHCP server only if the DHCP server is written to handle BOOTP queries. This requirement is specific to the DHCP software package used. Consult your system administrator to see if a DHCP package supports BOOTP commands and manual IP allocation.

ATTENTION: The EtherNet/IP communication module must be assigned a fixed network address. The IP address of this module must not be dynamically provided.

Failure to observe this precaution may result in unintended machine motion or loss of process control.

Use the DHCP Server to Set the IP Address of the Controller

Dynamic Host Configuration Protocol (DHCP) server automatically assigns IP addresses to client stations logging on to a TCP/IP network. DHCP is based on BOOTP and maintains some backward compatibility. The main difference is that BOOTP manual configuration (static), while DHCP enables static and dynamic allocation of network addresses and configurations to newly attached controllers.

Be cautious when using the DHCP server to configure a controller. A BOOTP client, such as the CompactLogix 5370 controllers, can start from a DHCP server only if the DHCP server is written to handle BOOTP queries. This requirement is specific to the DHCP server used. Consult your system administrator to see if a DHCP server supports BOOTP commands and manual IP allocation.

ATTENTION: Assign the CompactLogix 5370 controllers a fixed network address. The IP address of this controller is not to be dynamically provided.

Failure to observe this precaution can result in unintended machine motion or loss of process control.

If you use the Rockwell Automation BOOTP or DHCP server in an uplinked subnet where a DHCP server exists, a controller can procure an address from the enterprise server before the Rockwell Automation utility even sees the controller. Disconnect from the uplink to set the address and configure the controller to retain its static address before reconnecting to the uplink, if necessary.

Use RSLinx Software to Set the IP Address of the Controller

You can use RSLinx software to set the IP address of the CompactLogix 5370 controller.

IMPORTANT To set the IP address, that is, assign an IP address to a controller that does not have one, for a CompactLogix 5370 controller via RSLinx software, you must be connected to your controller via the USB port.

Complete these steps to set the IP address of the controller with RSLinx software.

IMPORTANT These steps show a 1769-L36ERM controller. The same steps would also apply to all CompactLogix 5370 controllers with slight variations in screens.

1. Make sure that a USB cable is connected to your computer and the controller.
2. Start RSLinx software.

   After several seconds, an RSWho dialog box appears.
3. If no RSWho dialog box appears, from the Communications pull-down menu, choose RSWho.

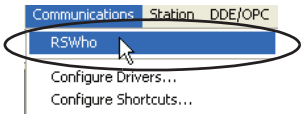

   The RSWho dialog box appears and includes the USB driver.
4. Right-click the EtherNet/IP module and choose Module Configuration.

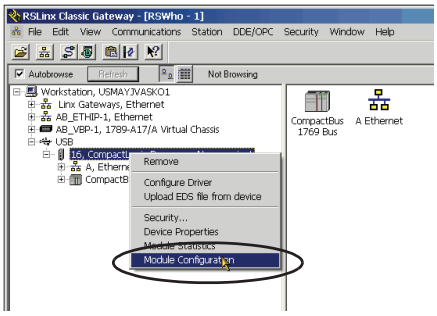

   The Module Configuration dialog box appears.

5. Click the Port Configuration tab.

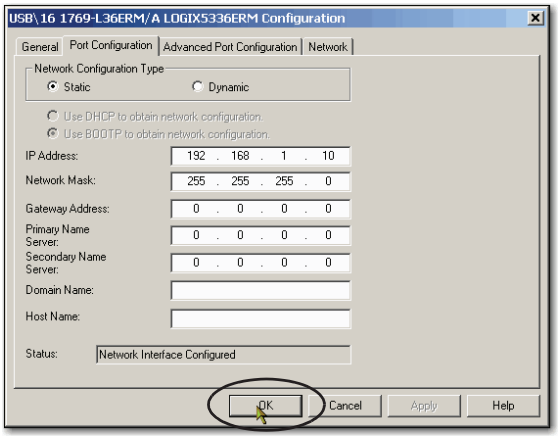

6. For Network Configuration Type, select Static to assign this configuration to the port.

IMPORTANT	If you click Dynamic, on a power cycle, the controller clears the current IP configuration and starts to send BOOTP requests.

7. Type the new IP address and Network Mask.
8. Click OK.

As with all configuration changes, if desired, make sure that you are using the SD card in a way that does not overwrite the IP address at the next controller power cycle.

For more information on using the SD card, see Chapter 12, Use a Secure Digital Card on page 301.

Use the Studio 5000 Environment to Set the IP Address of the Controller

You can use Logix Designer application to set the IP address of a CompactLogix 5370 controller. To set the IP address via the application, you must be connected to your controller via the USB port.

Complete these steps to set the IP address of the controller.

IMPORTANT These steps show a 1769-L18ERMBB1B controller. The same steps would also apply to all CompactLogix 5370 controllers with slight variations in screens.

1. Start the application.
2. Set the Project Path.
   a. Click RSWho.

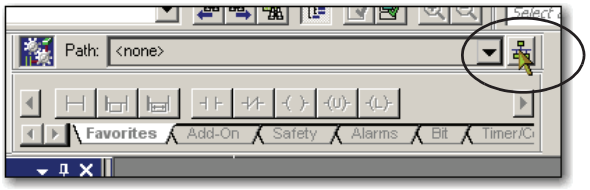

   The RSWho dialog box appears.

   b. Navigate over the USB network and select the CompactLogix 5370 controller.

   c. Click Set Project Path.

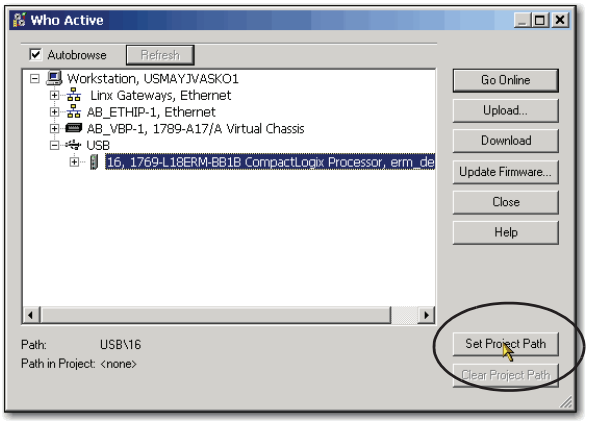

3. Click Download.

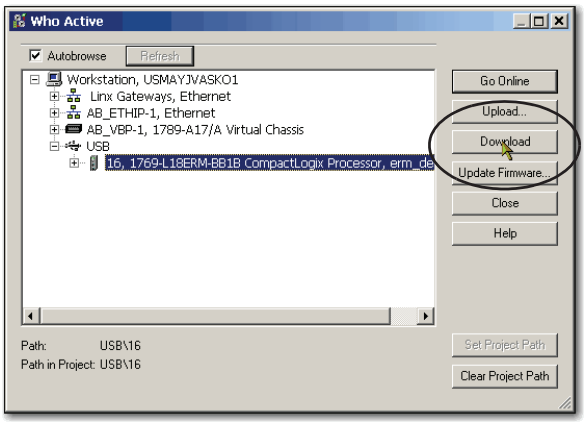

4. Click Download again.

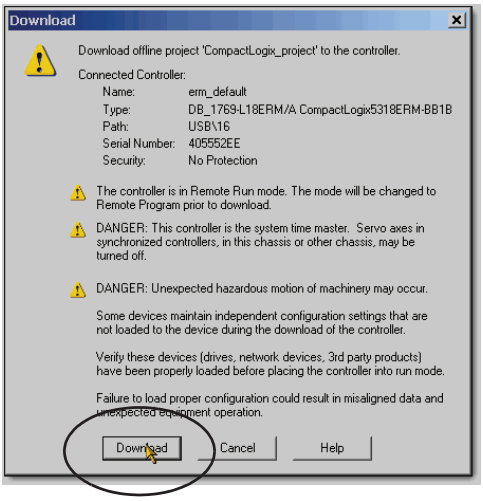

The new project is downloaded to the controller and the project goes online, in Remote Program or Program mode.

5. Right-click the controller name and choose Properties.

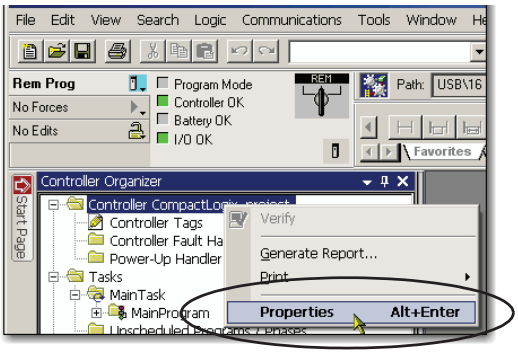

6. On the Controller Properties dialog box, click the Internet Protocol tab.

   The IP Settings Configuration values show that the controller has no IP address that is assigned to it.

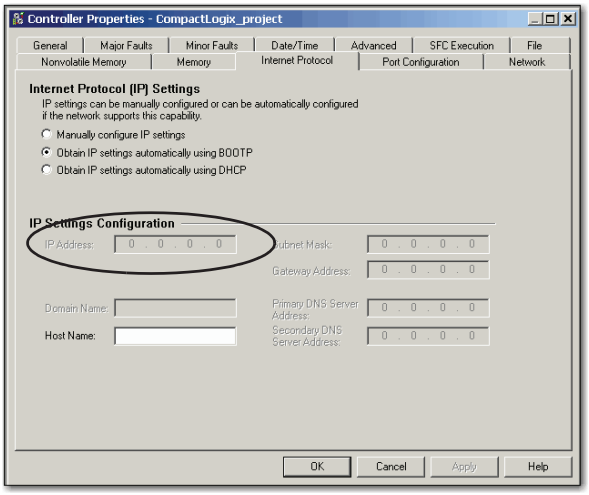

7. Click Manually configure IP settings.
8. Enter desired IP address and other configuration information and click OK.

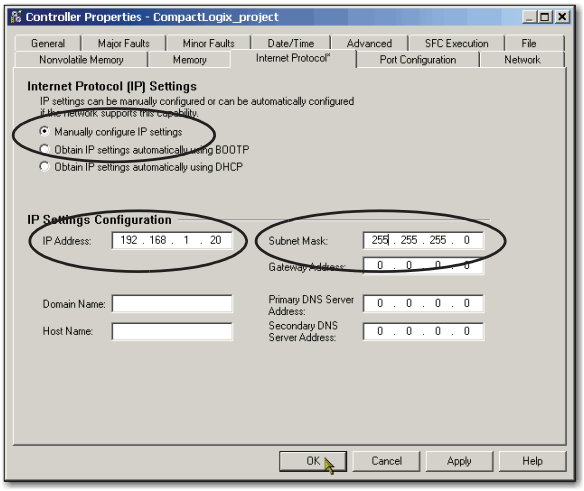

9. When prompted to confirm the IP address setting, click Yes.

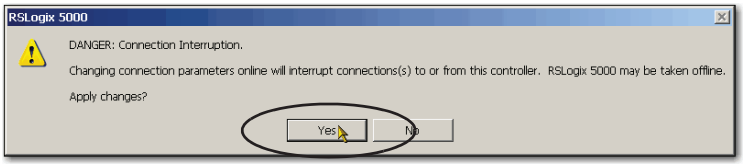

   The controller now uses the newly set IP address.

Use the SD Card to Set the IP Address of the Controller

You can use an SD card to set the IP address for a CompactLogix 5370 controller. Using the SD card to set the IP address eliminates the need for software to complete this task.

IMPORTANT To set the IP address from an SD card, software is not required during the power-up process. However, you must have previously saved the project to the SD card.

The IP address of the CompactLogix 5370 controller is automatically configured at power-up as long as you have configured an IP address, stored the program onto a controller, and set the SD card to the Load Image parameter set to On Power Up.

The option to set the IP address of a CompactLogix 5370 controller via an SD card at power-up is only one part of the process to load an entire project to the controller from the SD card.

Use this option carefully. For example, the SD card can contain a desirable IP address as part of an undesirable project, for example, a project that is older than the project currently used on the controller.

These requirements apply when using the SD card to set the IP address on a CompactLogix 5370 controller:

- A project must be stored on the SD card.
- The project that is stored on the SD card is configured with the Load Image parameter set to On Power Up.

For more information on using the SD card, see Chapter 12, Use a Secure Digital Card on page 301.

Change the IP Address of a Controller

You can change the IP address of a CompactLogix 5370 controller after system operation has begun. In this case, the controller has an IP address that is assigned to it, but you must change that IP address.

You can use these tools to changethe IP address of a controller:

- RSLinx Classic software
- Studio 5000 Logix Designer application
- SD card

IMPORTANT You **cannot** use any of these tools to **change** a the IP address of a controller:

- Bootstrap Protocol (BOOTP) server
- Dynamic Host Configuration Protocol (DHCP) server

Consider these factors when you determine how to change the IP address of a controller:

- Network isolation from, or integration into, the plant/enterprise network
- Network size - For large, isolated networks, it can be more convenient and safer to use a BOOTP/DHCP server rather than the Studio 5000 environment or RSLinx Classic software. A BOOTP/DHCP server limits the possibility of duplicate IP address assignment.

  However, you can only use the BOOTP/DHCP server to **set** the IP address of the controller and not to change it. If you decide to change the IP address of the controller and want to use a BOOTP/DHCP server to limit the possibility of duplicate IP address assignment, you must first clear the IP address.

  After clearing the IP address, use the steps that are described at Use the BOOTP Server to Set the IP Address of the Controller on page 83 or Use the DHCP Server to Set the IP Address of the Controller on page 89 to set the IP address of the controller.
- Company policies and procedures that deal with plant floor network installation and maintenance
- Level of involvement by IT personnel in plant-floor network installation and maintenance
- Type of training that is offered to control engineers and maintenance personnel

Change the Network IP Address with RSLinx Classic Software

IMPORTANT The steps in Use RSLinx Software to Set the IP Address of the Controller on page 90 describe how to assign an IP address for a CompactLogix 5370 controller that does not have an IP address.

The steps in this section describe how to change the IP address on a CompactLogix 5370 controller that has an IP address that is assigned to it.

The graphics in this section show how to change the IP address for a 1769-L36ERM controller. The same steps would also apply to all other CompactLogix 5370 controllers with slight variations in screens.

1. Right-click the controller and choose Module Configuration.

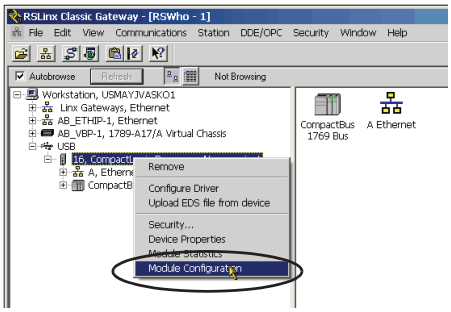

2. Click the Port Configuration tab when the Module Configuration dialog box appears.

   The controller has an IP address and Network Configuration Type.

3. Type a new IP address and make any other desired changes.
4. To assign this configuration to the controller, click Static in the Network Configuration Type section of the dialog box.

IMPORTANT If you click Dynamic, on a power cycle, the controller clears the current IP configuration and starts to send BOOTP or DHCP requests, depending on the controller configuration.

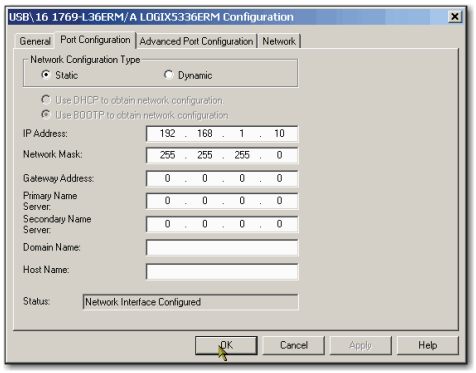

5. Click OK.

Change the Network IP Address with Logix Designer Application

IMPORTANT The steps in Use the Studio 5000 Environment to Set the IP Address of the Controller on page 92 describe how to **assign an IP address** for a CompactLogix 5370 controller that does not have an IP address.

The steps in this section describe how to **change the IP address** on a CompactLogix 5370 controller that has an IP address that is assigned to it.

You can change the IP address of a CompactLogix 5370 controller via Logix Designer application over a USB or EtherNet/IP network connection.

The graphics in this section show how to change the IP address for a 1769-L18ERM-BB1B controller over a USB connection. The same steps would also apply to all other CompactLogix 5370 controllers with slight variations in screens.

1. Verify that your computer is connected to the controller.
2. Verify that your project is online.
3. Right-click the controller name and choose Properties.

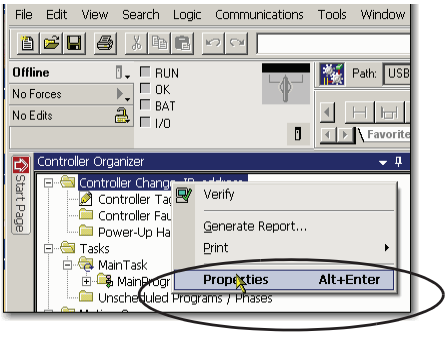

You can also right-click the Ethernet node in the I/O Configuration section and choose Properties. The Controller Properties dialog box appears on the Internet Protocol tab.

4. Change the IP address of the controller.
5. Make other changes where necessary.

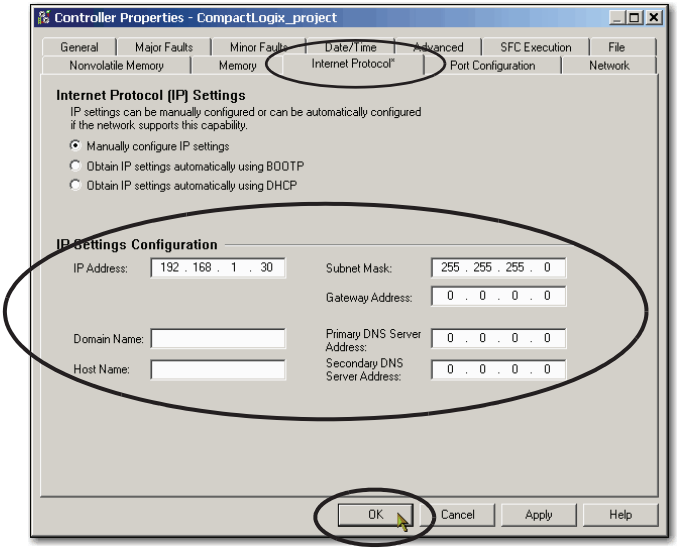

6. Click OK.

Change the Network IP Address with an SD Card

You can use an SD card to change the IP address for a CompactLogix 5370 controller when controller power is cycled. Using the SD card to change the IP address removes the need for software to complete this task.

IMPORTANT	To set the IP address from an SD card, software is not required during the power-up process. However, you must have previously saved the project to the SD card.

These requirements apply when using the SD card to change the IP address on a CompactLogix 5370 controller:

- A project is stored on the SD card.
- The project that is stored on the SD card includes another IP address for the CompactLogix 5370 controller than the IP address currently in use on the physical controller that houses the SD card.
- The project that is stored on the SD card is configured with the Load Image parameter set to On Power Up.
- Power is cycled to the controller with the SD card installed.

For more information on using the SD card, see Chapter 12, Use a Secure Digital Card on page 301.

Load the Controller Firmware

You must download the current firmware before you can use the CompactLogix 5370 controller.

IMPORTANT Do not interrupt a firmware upgrade while it is in process. Firmware upgrade interruption can cause the firmware revision of the CompactLogix 5370 controller to revert to its out-of-the-box revision level, that is, 1.*xxx*.

To load firmware, you can use any of the following:

- ControlFLASH software that installs with Logix Designer application
- AutoFlash that launches through the application when you download a project and the controller does not have the matching firmware revision
- SD card (catalog numbers 1784-SD1 or 1784-SD2) with an image stored on the card

If you use the ControlFLASH or AutoFlash utilities, you need an EtherNet/IP network or USB connection to the controller.

IMPORTANT The controller firmware revision that is loaded via the ControlFLASH software or the AutoFlash option can be overwritten after future controller power cycles if the conditions described in Use the Secure Digital Card to Load Firmware on page 112 exist.

The firmware is available with the application or you can download it from the support website. Go to http://www.rockwellautomation.com/support.

Complete these steps to download firmware from the support website.

1. On the Rockwell Automation Support Page, click Product Compatibility and Download Center under the Resources heading.

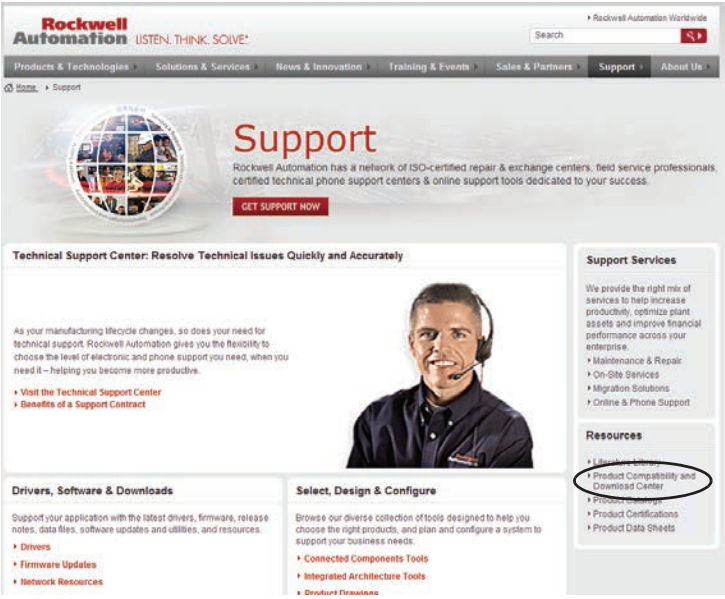

2. Click the Get Downloads tab.

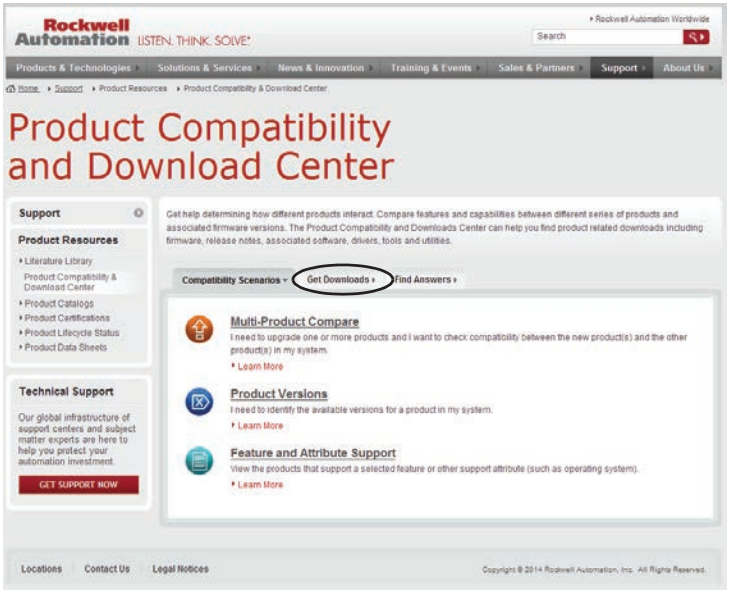

3. Click Find Product Downloads.

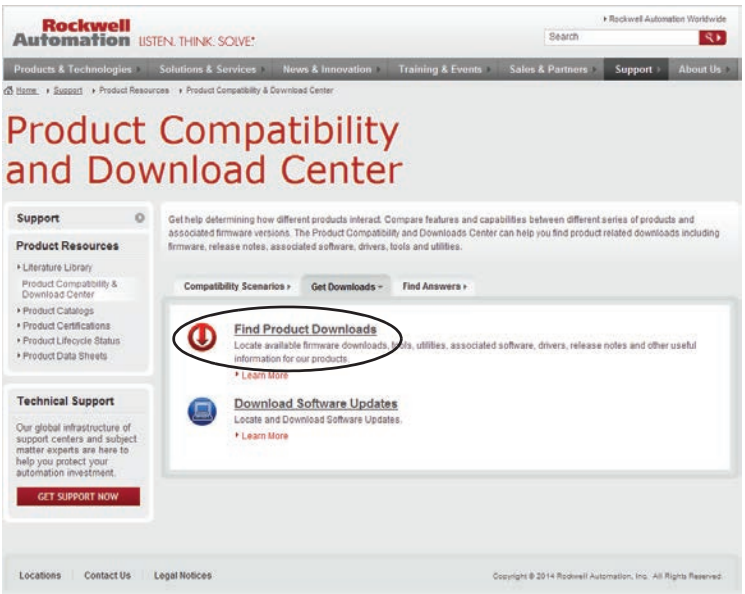

4. Type a term in the Product Search field.

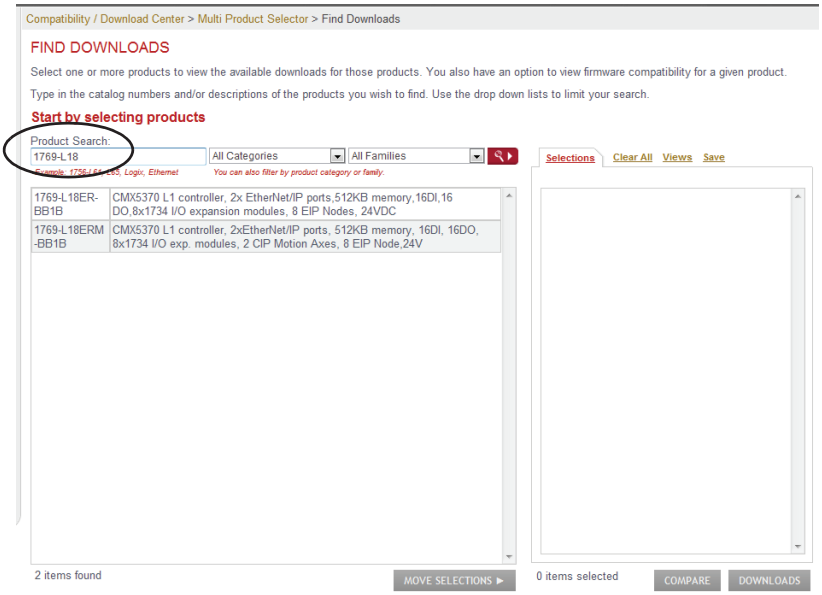

5. Select the correct series of the controller.

6. Click the correct product and select the desired firmware revision.

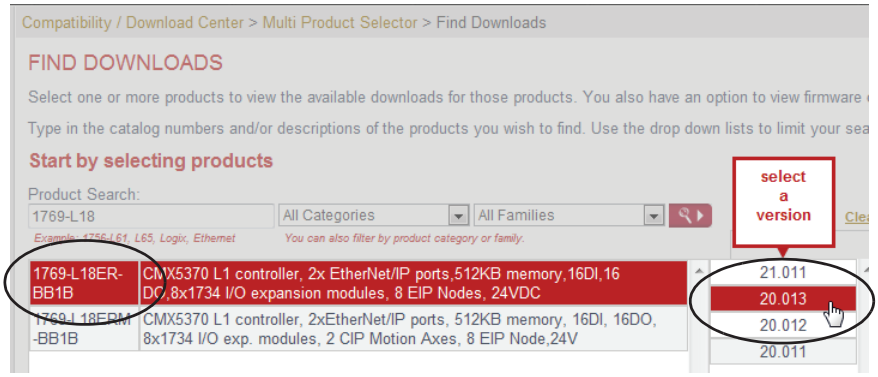

7. Click Downloads when the firmware is displayed in the Selections window.

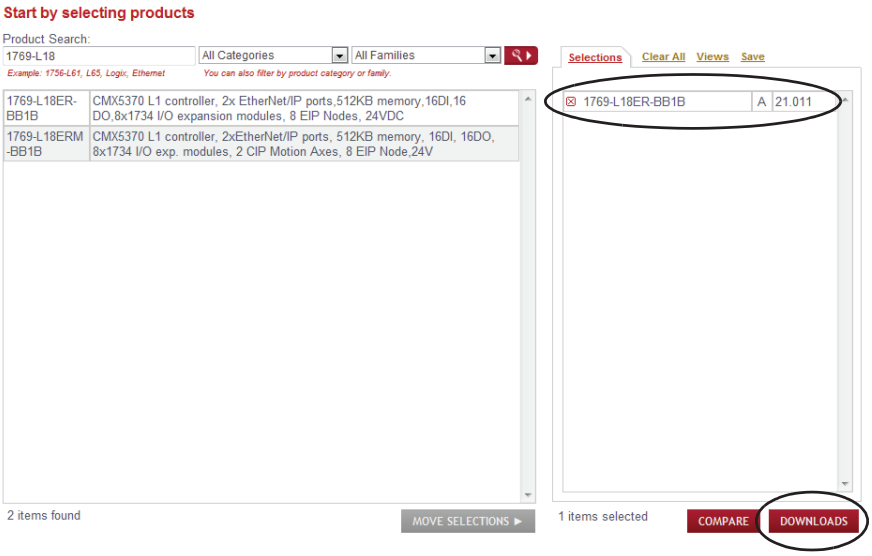

8. Click the show downloads icon.

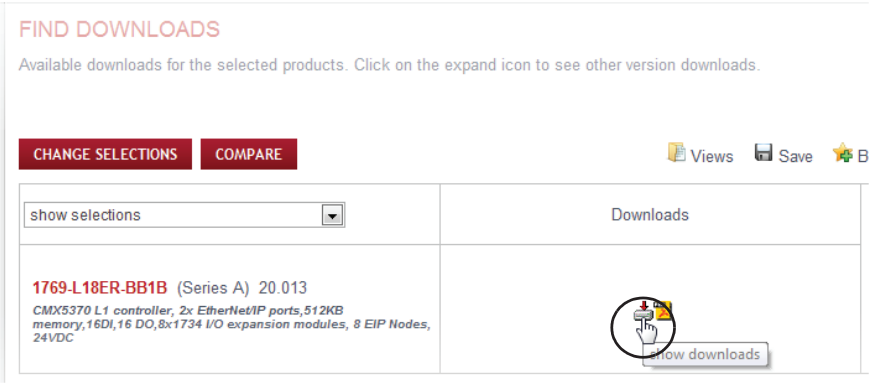

9. Click the Firmware link.

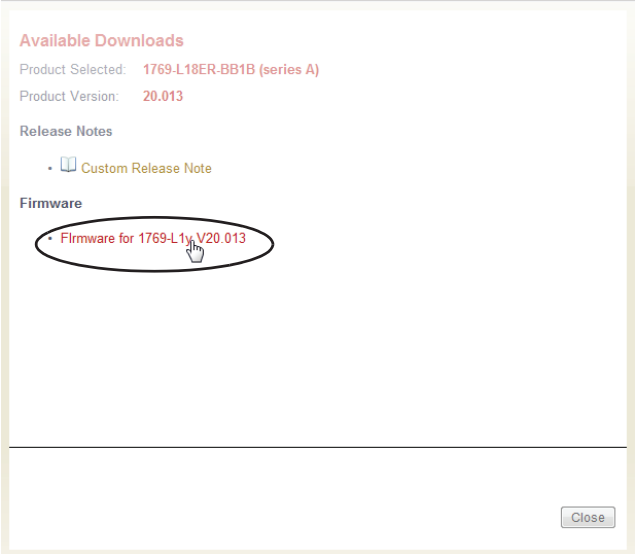

10. Enter the required credentials and click Sign In.

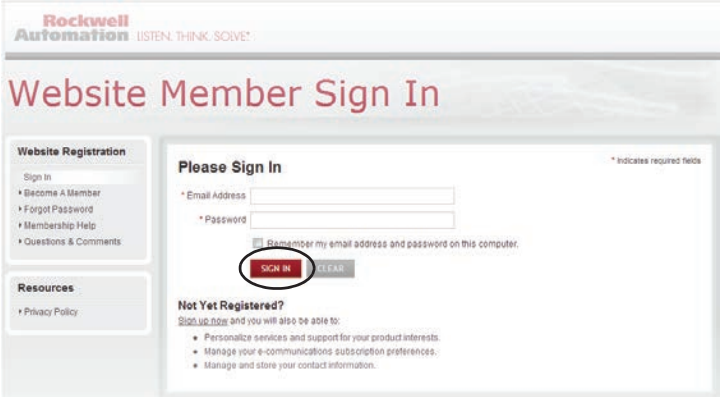

11. Click I Agree.

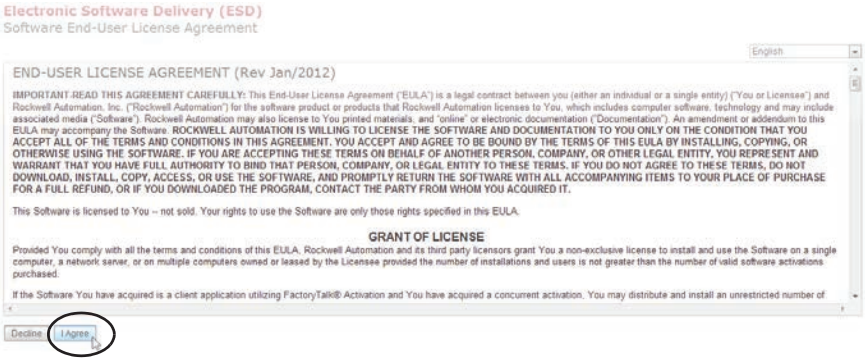

The Download Manager window appears.

12. Click Close when the download is complete.

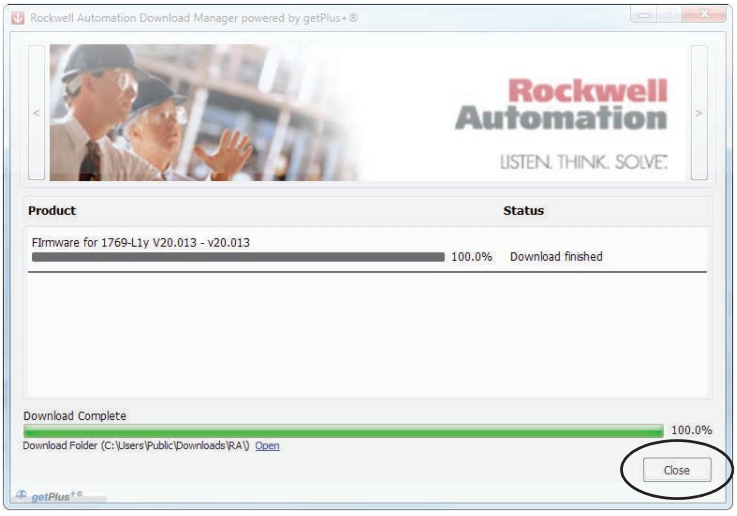

Use the ControlFLASH Software to Load Firmware

You can use the ControlFLASH software to load firmware through a USB or EtherNet/IP network connection. We recommend the following when you load firmware via the ControlFLASH software:

- Use a USB connection to load the firmware.
- Remove the SD card, if one is installed in the controller.

Complete these steps to use the ControlFLASH software to load firmware.

IMPORTANT These steps show a 1769-L36ERM controller. The same steps would also apply to all other CompactLogix 5370 controllers with slight variations in screens.

1. Verify that a connection exists between your computer and the CompactLogix 5370 controller.
2. Choose Start>Programs>FLASH Programming Tools>ControlFLASH.

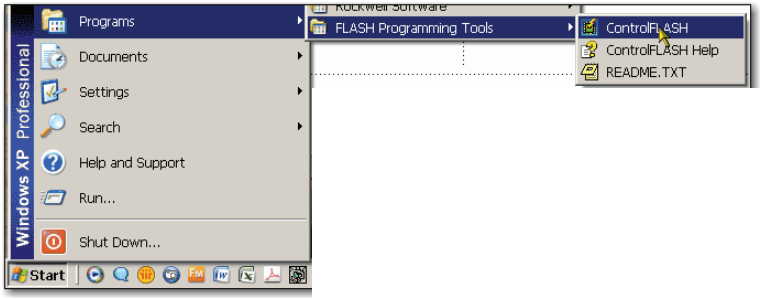

3. When the Welcome dialog box appears, click Next.

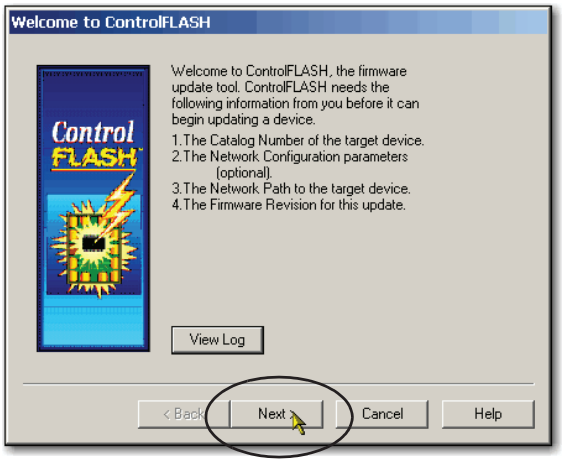

4. Choose the controller catalog number and click Next.

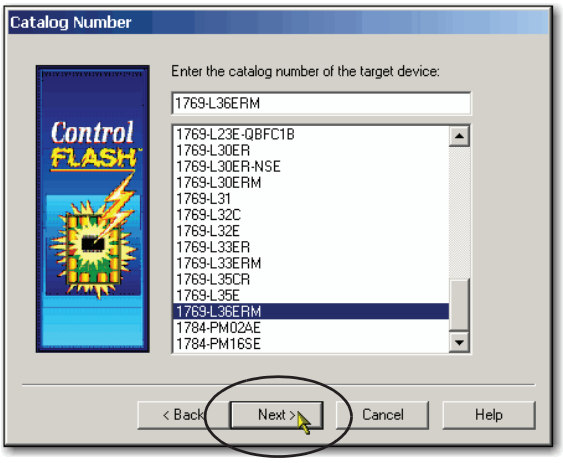

5. Expand the network until you see the controller.
6. Choose the controller at the first instance in which it appears, as shown in the following graphic, and click OK.

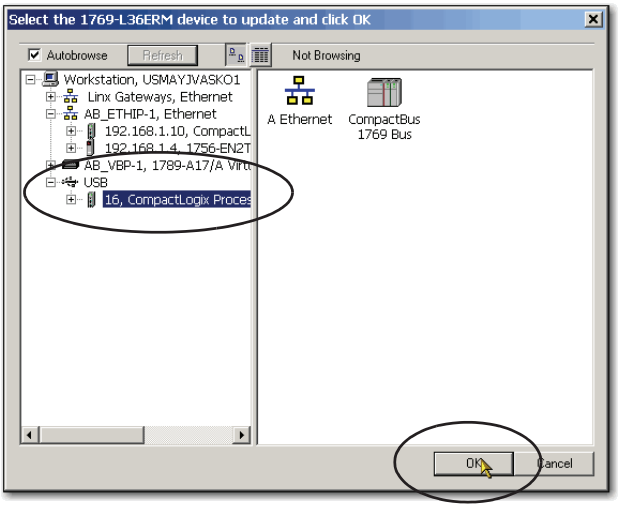

IMPORTANT If you expand the controller, that is, expand the network beyond the first instance in which it appears on the left side of the screen, you receive the following message:

- The target device is not in the proper mode to accept an update in ControlFLASH.

7. Choose the revision level to which you want to update the controller and click Next.

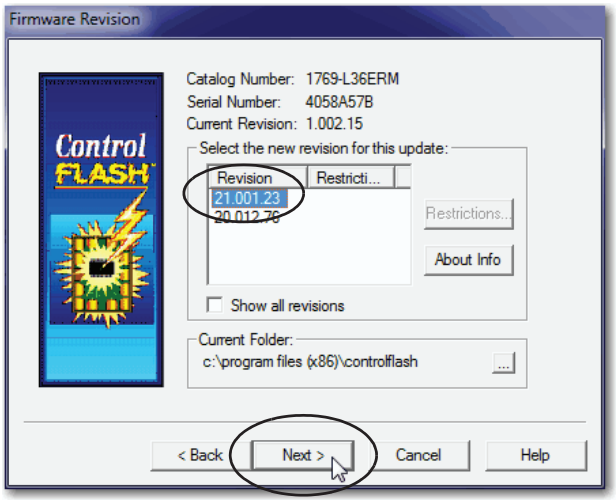

8. To start the update of the controller, click Finish and click Yes.

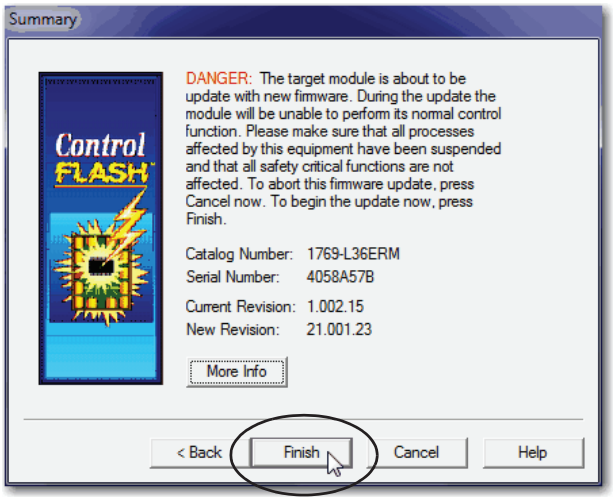

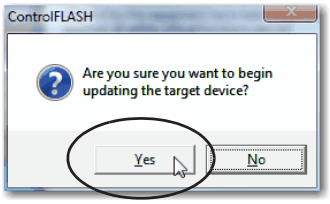

Before the firmware upgrade begins, you see the following dialog box. Take the required action for your application. In this example, the upgrade continues when OK is clicked.

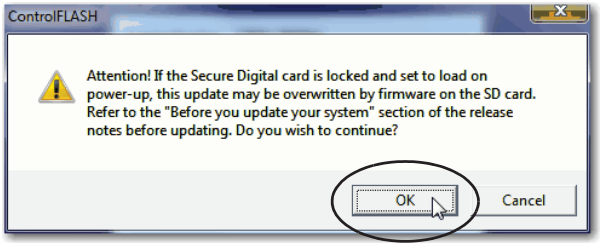

After the controller is updated, the status dialog box displays the message Update complete.

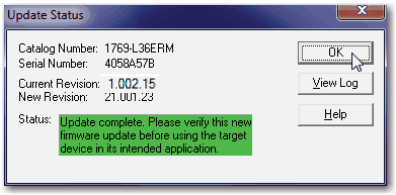

9. Click OK.
10. To close the ControlFLASH software, click Cancel and click Yes.

Automatic Upgrade for CompactLogix 5370 L1 Embedded I/O Module

IMPORTANT This section applies only to CompactLogix 5370 L1 controllers.

After the controller firmware upgrade process is complete, the controller can execute a firmware upgrade for its embedded I/O module.

Remember these points regarding the automatic firmware upgrade for the embedded I/O module:

- The firmware upgrade occurs on only the embedded I/O module, not the local expansion modules.

  If you must update the firmware revision on any 1734 POINT I/O modules that are used as local expansion modules, you must do so before installing them in the CompactLogix 5370 L1 control system.

- The firmware upgrade on the embedded I/O module occurs automatically. No user action is required.

- The upgrade process can take a few minutes to complete.

- During the firmware upgrade process, the OK status indicator on the controller remains in a flashing red state.

- Do not cycle power to the controller while the firmware upgrade for embedded I/O module is taking place.

Use AutoFlash to Load Firmware

You can use AutoFlash to load firmware through a USB or EtherNet/IP network connection.

Let the upgrade complete without interruption. If you interrupt a firmware upgrade that is in process, you are alerted that an error has occurred. In this case, cycle power to the controller. The firmware revision level reverts to the 1.*xxx* revision level and you can begin the upgrade process again.

Complete these steps to use the AutoFlash utility to load firmware.

IMPORTANT These steps show a 1769-L36ERM controller. The same steps would also apply to all CompactLogix 5370 controllers with slight variations in screens.

1. Make sure that the network connection is made and your network driver is configured in RSLinx Classic software.
2. Create a controller project.
3. Click RSWho to specify the controller path.

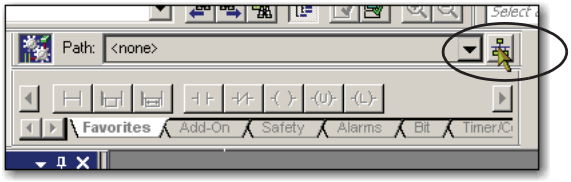

4. Select your controller and click Download.

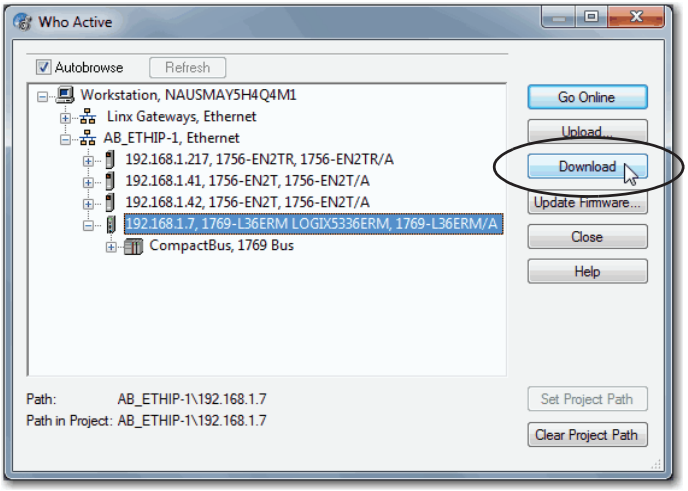

You can also choose to click Update Firmware to complete this process. If you do so, skip to step 6.

A dialog box appears to indicate that the project revision and controller firmware revision are different.

5. Click Update Firmware.

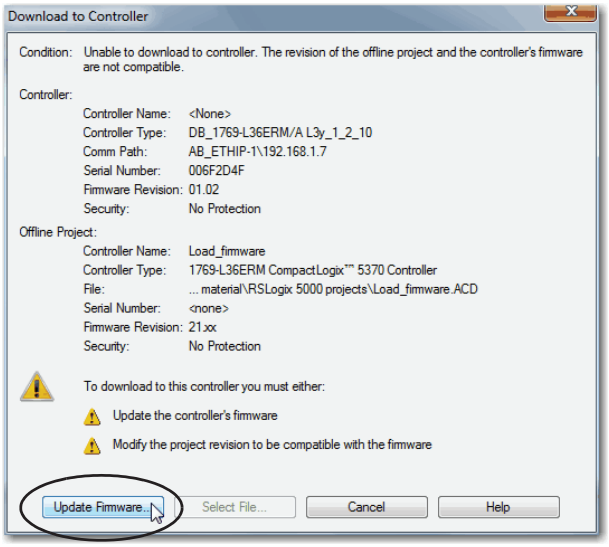

6. Use the checkbox and pull-down menu to choose your controller and firmware revision.
7. Click Update.

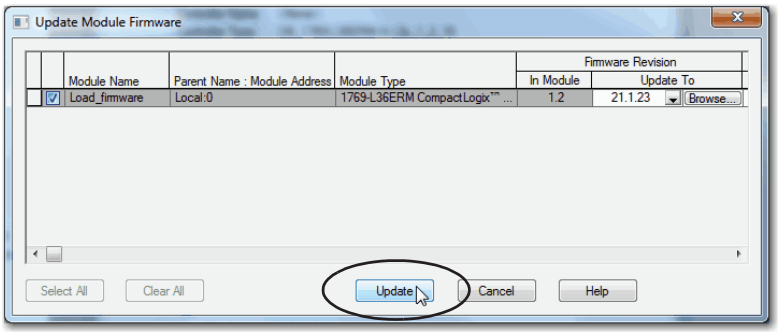

8. When the Update Firmware dialog box appears, click Yes.

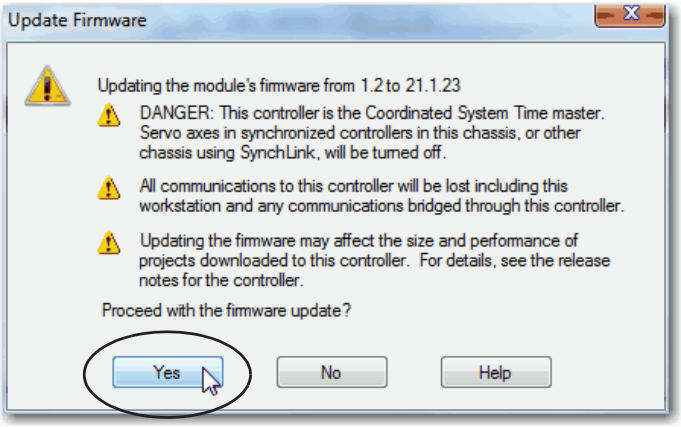

Before the firmware upgrade begins, you can be warned about your controller missing its SD card. Take the required action, typically click OK.

The firmware upgrade begins.

9. When the firmware upgrade is complete, the Download dialog box appears and you can continue by downloading your project to the controller.

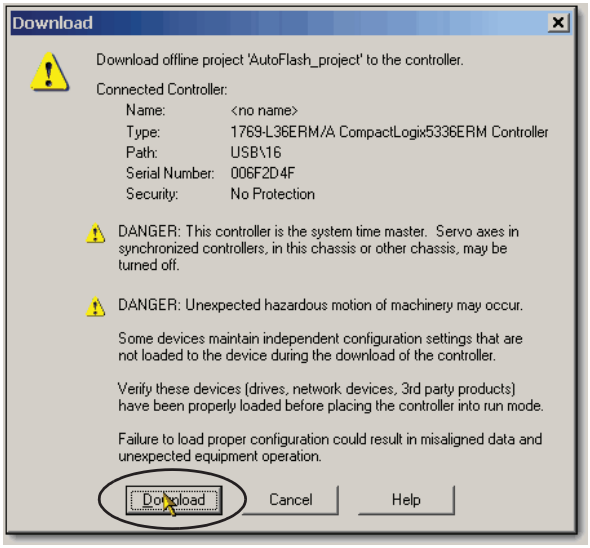

Use the Secure Digital Card to Load Firmware

You can use an installed SD card to load firmware on a CompactLogix 5370 controller. Using the SD card to load firmware eliminates the need for software to complete this task.

IMPORTANT	An installed SD card automatically updates the firmware of the controller if the SD card is configured with the Load Image parameter set to On Power Up. This feature is and cannot be disabled.

Your application requires the following to load firmware from an SD card at power-up:

- You must have saved the project to the SD card before the power cycle.
- The firmware revision in the project that is stored on the SD card differs from the firmware revision on the CompactLogix 5370 controller.

For more information on using the SD card, see Chapter 12, Use a Secure Digital Card on page 301.

Select the Operating Mode of the Controller

CompactLogix 5370 controllers have slightly different front designs and mode switch placements.

WARNING: When you change switch settings while power is on, an electrical arc can occur. This could cause an explosion in hazardous location installations. Be sure that power is removed or the area is nonhazardous before proceeding.

This graphic shows the mode switch on a CompactLogix 5370 L1 controller.

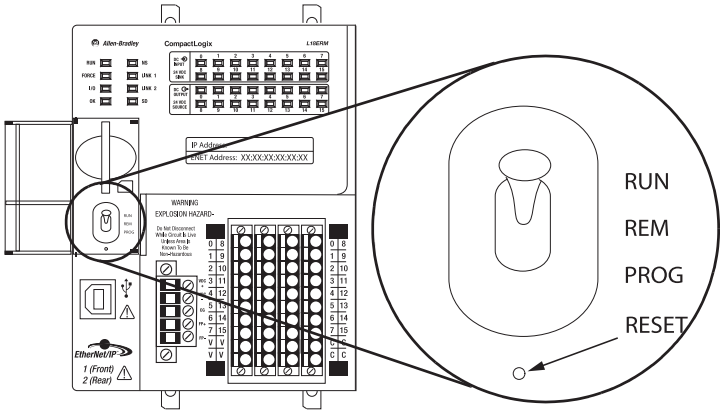

This graphic shows the mode switch on a CompactLogix 5370 L2 controller.

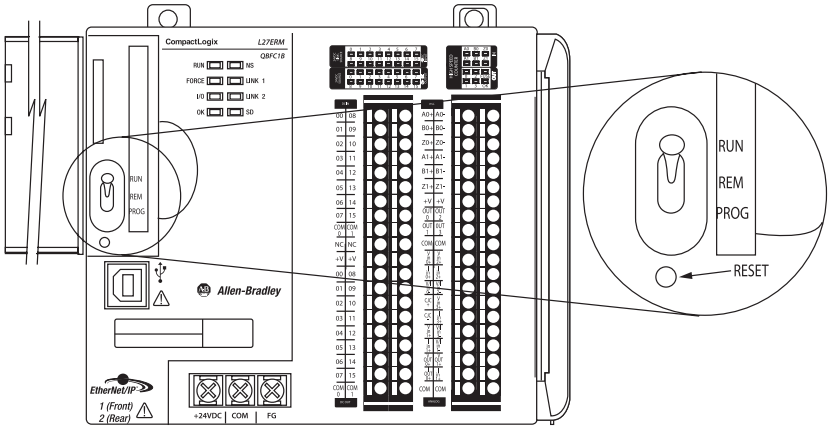

This graphic shows the mode switch on a CompactLogix 5370 L3 controller.

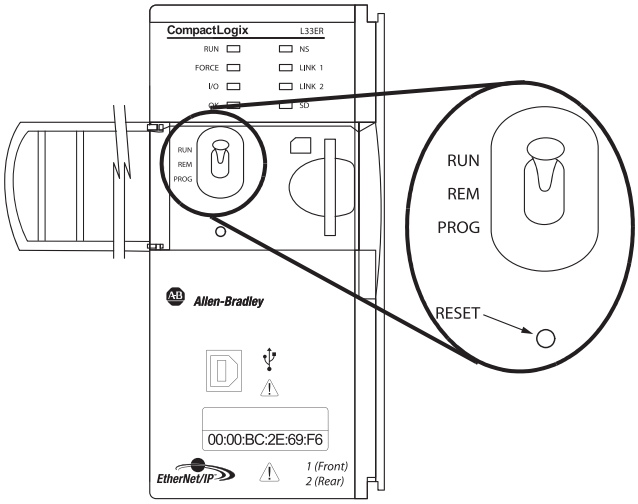

Use the mode switch on the controller to set the operating mode of the CompactLogix 5370 controller.

Mode Switch Position	Description
Run	You can perform these tasks: • Upload projects. • Run the program and enable outputs. You cannot perform these tasks: • Update controller firmware. • Create or delete tasks, programs, or routines. • Create or delete tags or edit online. • Import a program to the controller. • Change the port configuration of the controller, advanced port configuration, nor network configuration settings. • Change controller configuration parameters that are directly set for operation on a device-level ring (DLR) network topology.
Prog	You can perform these tasks: • Update controller firmware. • Disable outputs. • Upload/download projects. • Create, modify, and delete tasks, programs, or routines. • Change the port configuration of the controller, advanced port configuration, nor network configuration settings. You cannot perform these tasks: • Use the controller to execute (scan) tasks.

Mode Switch Position	Description	
Rem	You can perform these tasks: • Upload/download projects. • Change the port configuration of the controller, advanced port configuration, nor network configuration settings. • Change between Remote Program, Remote Test, and Remote Run modes through the application.	
	Remote Run	• The controller executes (scans) tasks. • Enable outputs. • Edit online.
	Remote Program	• Update controller firmware. • Disable outputs. • Create, modify, and delete tasks, programs, or routines. • Download projects. • Edit online. • The controller does not execute (scan) tasks.
	Remote Test	• Execute tasks with outputs disabled. • Edit online.

Notes:

CompactLogix 5370 Controllers Overview

Topic	Page
CompactLogix 5370 Control System Components	118
Controller Functionality	119
Electronic Keying	121

The CompactLogix 5370 controllers offer state-of-the-art control, communication, and I/O elements in a distributed control package. This product family includes the following CompactLogix 5370 controllers:

- 1769-L16ER-BB1B
- 1769-L18ER-BB1B
- 1769-L18ERM-BB1B
- 1769-L24ER-QB1B
- 1769-L24ER-QBFC1B
- 1769-L27ERM-QBFC1B
- 1769-L30ER
- 1769-L30ERM
- 1769-L30ER-NSE
- 1769-L33ER
- 1769-L33ERM
- 1769-L36ERM

Among the features the CompactLogix 5370 controllers support, are dual EtherNet/IP ports on each controller and support for Integrated Motion over an EtherNet/IP network on some CompactLogix 5370 controllers.

For a complete description of the CompactLogix 5370 control system components and functionality, see Table 2 and Table 3, respectively.

CompactLogix 5370 Control System Components

Table 2 describes components a CompactLogix 5370 controller uses in a typical control system.

Table 2 - CompactLogix 5370 Control System Components

System Component	Product Family		
	CompactLogix 5370 L1 Controllers	**CompactLogix 5370 L2 Controllers**	**CompactLogix 5370 L3 Controllers**
Controller	One of the controllers that is documented in this publication		
Power supply	External power supply that is connected to the embedded 24V DC nominal input of the controller, nonisolated power supply. The power supply has a 10…28.8 input range.	External power supply that is connected to the embedded 24V DC input of the controller, isolated power supply	One of the following 1769 Compact I/O power supplies: • 1769-PA2 • 1769-PB2 • 1769-PA4 • 1769-PB4
Communication networks components	Any of the following: • EtherNet/IP network via built-in EtherNet/IP network ports • USB connection only for programming and firmware upgrades	Any of the following: • EtherNet/IP network via built-in EtherNet/IP network ports • DeviceNet network via a 1769-SDN module • USB connection only for programming and firmware upgrades	
Software	• One of the following: – RSLogix 5000 software, version 20.*xx.xx*, - For CompactLogix 5370 controllers that are using firmware revision 20.*xxx* – Logix Designer application, version 21.00.00 or later, - For CompactLogix 5370 controllers that are using firmware revision 21.000 or later • RSLinx Classic software, version 2.59.*xx* or later • RSNetWorx™ for DeviceNet software, version 11.00.00 or later **IMPORTANT**: This software is not used with CompactLogix 5370 L1 controllers because they do not offer DeviceNet connectivity.		
Secure Digital (SD) card for external nonvolatile memory	• 1784-SD1 card - Ships with CompactLogix 5370 controller and offers 1 GB of memory • 1784-SD2 card - Available for separate purchase and offers 2 GB of memory		
I/O modules	• 16 embedded 24V DC digital input points - The nominal input voltage is 24V DC but the operating range is 10…28.8V DC. • 16 embedded 24V DC digital output points - The nominal input voltage is 24V DC but the operating range is 10…28.8V DC. • Local expansion modules- 1734 POINT I/O modules • Distributed I/O - Multiple I/O module product lines over an EtherNet/IP network	• 16 embedded 24V DC digital input points • 16 embedded 24V DC digital output points • Only 1769-L24ER-QBFC1B and 1769-L27ERM-QBFC1B controllers – Four embedded high-speed counters – Four embedded universal analog input points – Two embedded analog output points • Local expansion modules- 1769 Compact I/O modules • Distributed I/O - Multiple I/O module product lines over DeviceNet and EtherNet/IP networks	• Local expansion modules- 1769 Compact I/O modules • Distributed I/O - Multiple I/O module product lines over DeviceNet and EtherNet/IP networks
Reset button	If held in during controller powerup, it clears the user program from the internal memory of the controller.		

Controller Functionality

Table 3 describes functionality available with CompactLogix 5370 controllers.

Table 3 - CompactLogix 5370 Controller Functionality

Cat. No.	Controller Tasks Supported	Programs Supported Per Task	Internal Energy Storage Solution	EtherNet/IP Network Topology Support	Power Supply Distance Rating	On-board User Memory Size	Local I/O Module Support
1769-L16ER-BB1B	32	1000	Yes - Eliminating the need for a battery	Support the following topologies: • Device-level ring (DLR) • Linear • Traditional star	NA	384 KB	As many as six 1734 POINT I/O modules(2)
1769-L18ER-BB1B						512 KB	As many as eight 1734 POINT I/O modules(2)
1769-L18ERM-BB1B							
1769-L24ER-QB1B					See footnote(1)	768 KB	As many as four Compact I/O modules
1769-L24ER-QBFC1B							
1769-L27ERM-QBFC1B						1 MB	
1769-L30ER					4	1 MB	As many as eight Compact I/O modules
1769-L30ER-NSE							
1769-L30ERM							
1769-L33ER						2 MB	As many as 16 Compact I/O modules
1769-L33ERM							
1769-L36ERM						3 MB	As many as 30 Compact I/O modules

(1) CompactLogix 5370 L2 controllers have an embedded power supply. Therefore, you do not need to consider power supply distance rating when installing the controller. The Compact I/O modules that are used as local expansion modules in a CompactLogix 5370 L2 control systems operate on a CompactBus and do have a power supply distance rating you must consider when installing those modules. For more information on power supply distance rating regarding using Compact I/O modules in a CompactLogix 5370 L2 control system, see page 146 and page 226.

(2) **IMPORTANT**: You can use up to the maximum number of 1734 POINT I/O modules with the CompactLogix 5370 L1 controllers that are listed in Table 1, as long as the total current drawn by the modules does not exceed the available POINTBus backplane current of 1 A. If you must use more local expansion modules than the POINTBus backplane current supports, you can install a 1734-EP24DC POINT I/O expansion power supply between local expansion modules to increase the POINTBus backplane power and meet your system requirements.

The 1769-L30ER-NSE controller is intended for use in applications that require the installed controller to deplete its residual stored energy to specific levels before transporting it into or out of your application.

WARNING: If your application requires the 1769-L30ER-NSE controller to deplete its residual stored energy to 40 µJ or fewer before you transport it into or out of the application, complete these steps before you remove the controller.

1. Turn off power to the chassis.

   After you turn off power, the controller's OK status indicator transitions from Green to Solid Red to OFF.

2. Wait **at least 15 minutes** for the residual stored energy to decrease to 40 µJ or fewer before you remove the controller.

There is no visual indication of when the 15 minutes has expired. **You must track that time period**.

IMPORTANT The Real Time Clock (RTC) does not retain its time and date when the power is off.

Some applications that require the installed controller deplete its residual stored energy to specific levels before transporting it into or out of your application. This can include other devices that also require a wait time before removing them. See the documentation of those products for more information.

Support for Integrated Motion over an EtherNet/IP Network

The following CompactLogix 5370 controllers support Integrated Motion over an EtherNet/IP network:

- 1769-L18ERM-BB1B
- 1769-L27ERM-QBFC1B
- 1769-L30ERM
- 1769-L33ERM
- 1769-L36ERM

For more information on using CompactLogix 5370 controllers in applications that require Integrated Motion over an EtherNet/IP network, see Chapter 11, Develop Integrated Motion over an EtherNet/IP Network Application on page 289.

Electronic Keying

Electronic Keying reduces the possibility that you use the wrong device in a control system. It compares the device that is defined in your project to the installed device. If keying fails, a fault occurs. These attributes are compared.

Attribute	Description
Vendor	The device manufacturer.
Device Type	The general type of the product, for example, digital I/O module.
Product Code	The specific type of the product. The Product Code maps to a catalog number.
Major Revision	A number that represents the functional capabilities of a device.
Minor Revision	A number that represents behavior changes in the device.

The following Electronic Keying options are available.

Keying Option	Description
Compatible Module	Lets the installed device accept the key of the device that is defined in the project when the installed device can emulate the defined device. With Compatible Module, you can typically replace a device with another device that has the following characteristics: • Same catalog number • Same or higher Major Revision • Minor Revision as follows: – If the Major Revision is the same, the Minor Revision must be the same or higher. – If the Major Revision is higher, the Minor Revision can be any number.
Disable Keying	Indicates that the keying attributes are not considered when attempting to communicate with a device. With Disable Keying, communication can occur with a device other than the type specified in the project. **ATTENTION**: Be extremely cautious when using Disable Keying; if used incorrectly, this option can lead to personal injury or death, property damage, or economic loss. We **strongly recommend** that you **do not use** Disable Keying. If you use Disable Keying, you must take full responsibility for understanding whether the device being used can fulfill the functional requirements of the application.
Exact Match	Indicates that all keying attributes must match to establish communication. If any attribute does not match precisely, communication with the device does not occur.

Carefully consider the implications of each keying option when selecting one.

IMPORTANT	Changing Electronic Keying parameters online interrupts connections to the device and any devices that are connected through the device. Connections from other controllers can also be broken. If an I/O connection to a device is interrupted, the result can be a loss of data.

More Information

For more detailed information on Electronic Keying, see Electronic Keying in Logix5000 Control Systems Application Technique, publication LOGIX-AT001.

Example System Configurations

CompactLogix 5370 controllers support the following networks:

- EtherNet/IP network - All CompactLogix 5370 controllers
- DeviceNet network - Only CompactLogix 5370 L2 and L3 controllers

EtherNet/IP Network

IMPORTANT Figure 2, Figure 3, and Figure 4 show CompactLogix 5370 controllers that are used in a DLR network topology on an EtherNet/IP network. You can also use CompactLogix 5370 controllers in linear or star EtherNet/IP network topologies.

For more information on the other EtherNet/IP network topologies, see Communicate over Networks on page 127.

Some of the CompactLogix 5370 controllers support Integrated Motion over an EtherNet/IP network, if desired. For more information on using Integrated Motion over an EtherNet/IP network, see Chapter 11, Develop Integrated Motion over an EtherNet/IP Network Application on page 289.

Figure 2 shows an example EtherNet/IP system configuration for a 1769-L18ERM-BB1B controller.

Figure 2 - Example 1769-L18ERM-BB1B Control System Configuration on an EtherNet/IP Network

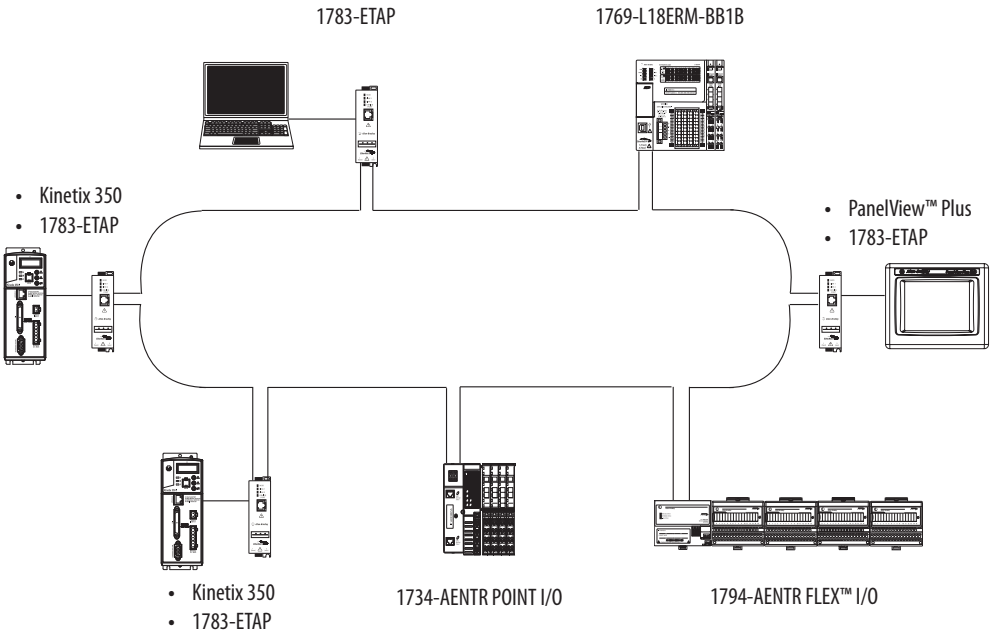

Figure 3 shows an example EtherNet/IP system configuration for a 1769-L27ERM-QBFC1B controller.

Figure 3 - Example 1769-L27ERM-QBFC1B Control System Configuration on an EtherNet/IP Network

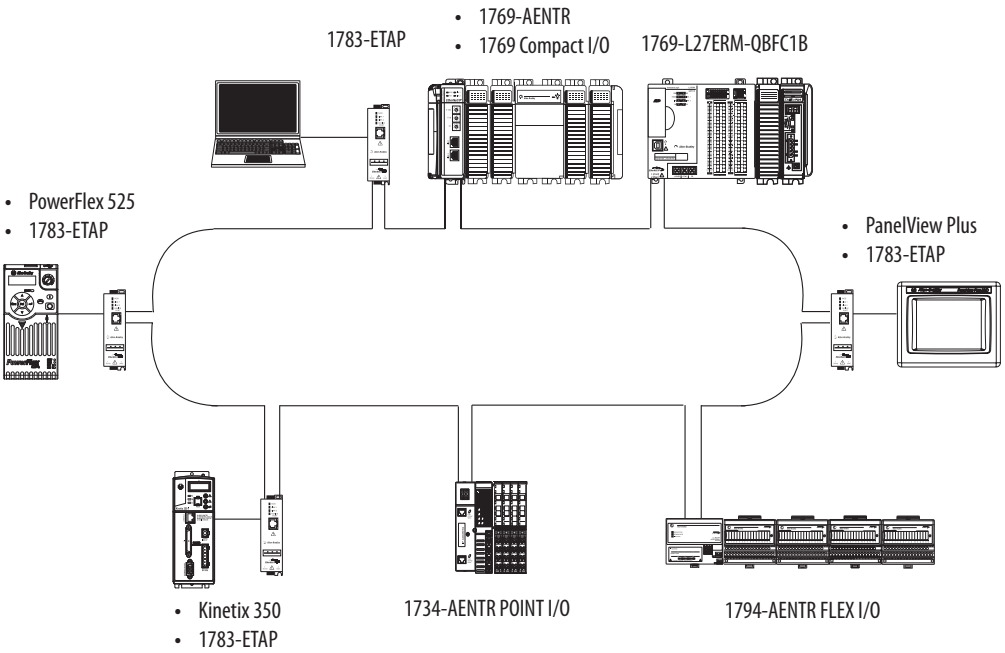

Figure 4 shows an example EtherNet/IP system configuration for a 1769-L33ERM controller.

Figure 4 - Example 1769-L33ERM Control System Configuration on an EtherNet/IP Network

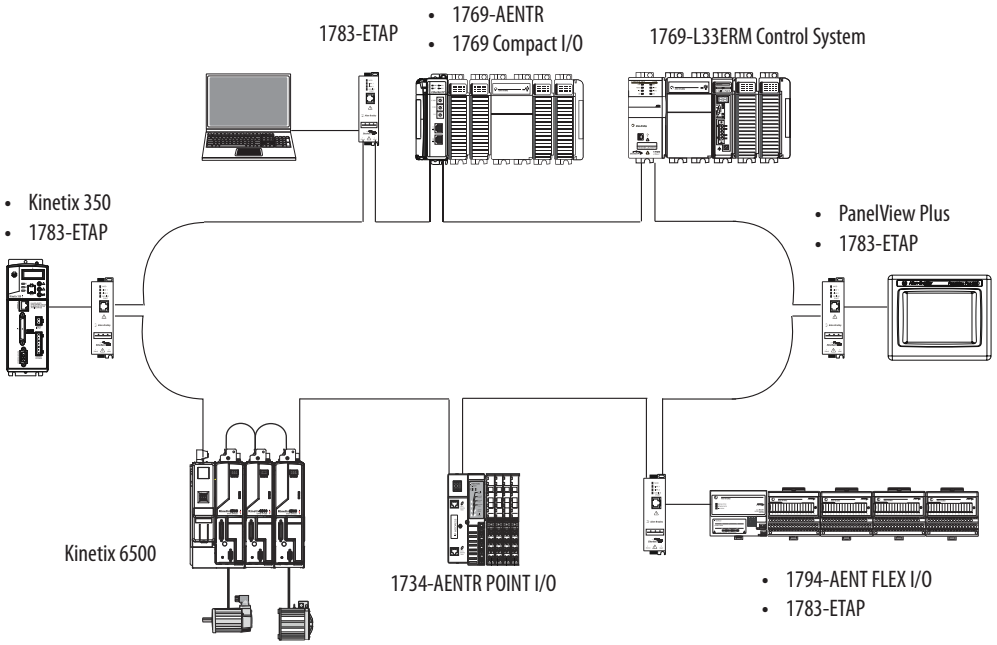

DeviceNet Network

IMPORTANT CompactLogix 5370 L2 and L3 controllers can send messages to devices on the DeviceNet network; however, these **controllers cannot receive** messages from those devices on the DeviceNet network.

Figure 5 shows an example DeviceNet system configuration for a CompactLogix 1769-L24ER-QB1B controller.

Figure 5 - Example 1769-L24ER-QB1B Control System Configuration on a DeviceNet Network

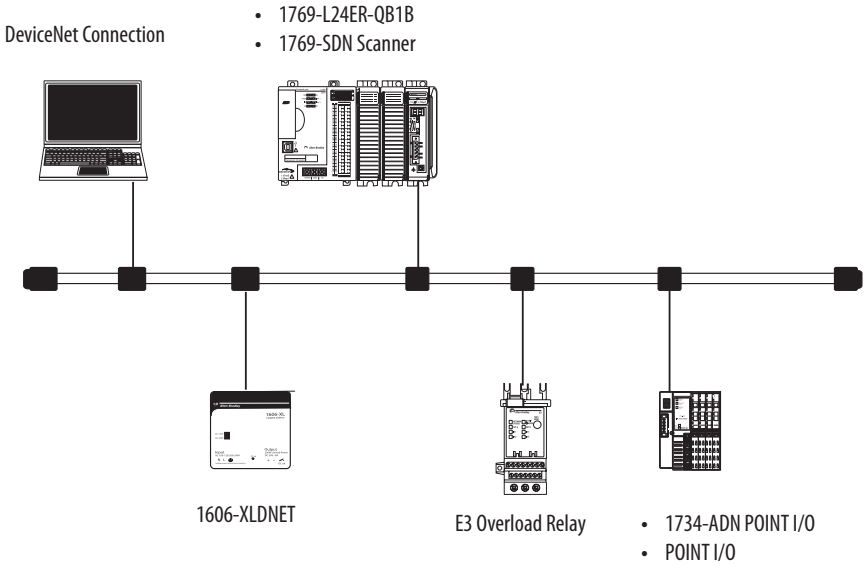

Figure 6 shows an example DeviceNet system configuration for a CompactLogix 1769-L33ERM controller.

Figure 6 - Example 1769-L33ERM Control System Configuration on a DeviceNet Network

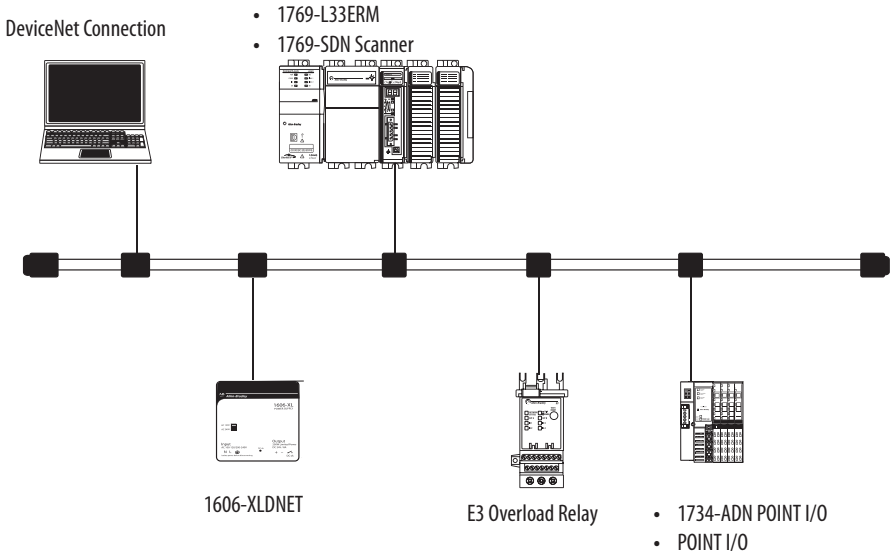

For more information on using the CompactLogix 5370 L2 or L3 controllers on DeviceNet networks, see Communicate over Networks on page 127.

Notes:

Communicate over Networks

Topic	Page
EtherNet/IP Network Communication	128
DeviceNet Network Communication	143

All CompactLogix 5370 controllers support these tasks over an **EtherNet/IP network**:

- Control distributed I/O
- Send/receive messages to/from other devices on the same network or another network
- Produce/consume (interlock) data between controllers
- Socket interface

CompactLogix 5370 L2 and L3 controllers support these tasks over a **DeviceNet network**:

- Control distributed I/O
- Send messages to devices on the same network; the controller cannot receive messages from other devices on the network.

All CompactLogix 5370 controllers also support temporary connections from your computer via a USB connection.

EtherNet/IP Network Communication

The EtherNet/IP network offers a full suite of control, configuration, and data collection services by layering the Common Industrial Protocol (CIP) over the standard internet protocols, such as TCP/IP and UDP. This combination of well-accepted standards provides the capability that is required to support information data exchange and control applications.

The CompactLogix 5370 controllers use socket interface transactions and conventional communication over the EtherNet/IP network to communicate with Ethernet devices that do not support the EtherNet/IP application protocol.

For more information on socket interface transactions, see Socket Interface with CompactLogix 5370 Controllers on page 138.

Available Software

You use the software that is listed in the following table with a CompactLogix 5370 controller on an EtherNet/IP network.

Software	Required Version	Functions	Required
RSLogix 5000	Version 20.*xx.xx* - For CompactLogix 5370 controllers that are using firmware revision 20.*xxx*.	• Configure the CompactLogix project. • Define EtherNet/IP communication. • Change IP address for devices on network, including the CompactLogix 5370 controller.	Yes
Studio 5000 environment	Version 21.00.00 or later - For CompactLogix 5370 controllers that are using firmware revision 21.000 or later.		
RSLinx Classic	Version 2.59 or later	• Assign or change IP addresses to devices on an EtherNet/IP network. • Configure communication devices. • Provide diagnostics. • Establish communication between devices.	
BOOTP/DHCP utility	Most current version is installed with RSLinx Classic software installation	Assign IP addresses to devices on an EtherNet/IP network.	No

EtherNet/IP Network Functionality on CompactLogix 5370 Controllers

The CompactLogix 5370 controllers offer this EtherNet/IP network functionality:

- Dual built-in EtherNet/IP network ports
- Support for the following EtherNet/IP network topologies:
  - Device-level Ring Network Topology
  - Linear Network Topology
  - Star Network Topology
- Support for CIP Sync technology
- Support for Integrated Motion over an EtherNet/IP network - Only the following controllers support this functionality:
  - 1769-L18ERM-BB1B
  - 1769-L27ERM-QBFC1B
  - 1769-L30ERM
  - 1769-L33ERM
  - 1769-L36ERM
- Socket interface to communicate with Ethernet devices that do not support the EtherNet/IP application protocol
- Duplicate IP address detection
- Unicast and multicast communication
- Support messaging, produced/consumed tags, HMI, and distributed I/O
- Interface via RJ45, twisted-pair cables
- Support half/full-duplex 10 Mbps or 100 Mbps operation
- Support standard switches
- No network scheduling required
- No routing tables required

Nodes on an EtherNet/IP Network

When configuring your CompactLogix 5370 control system, you must account for the number of Ethernet nodes you include in the I/O configuration section of your project. CompactLogix 5370 controllers have limits on the number of nodes they support in the I/O configuration section.

Table 4 lists the Ethernet node limits for CompactLogix controllers.

Table 4 - CompactLogix 5370 Controller Ethernet Node Guidelines

Cat. No.	Ethernet Nodes Supported
1769-L16ER-BB1B	4
1769-L18ER-BB1B	8
1769-L18ERM-BB1B	
1769-L24ER-QB1B	8
1769-L24ER-QBFC1B	
1769-L27ERM-QBFC1B	16
1769-L30ER	16
1769-L30ERM	
1769-L30ER-NSE	
1769-L33ER	32
1769-L33ERM	
1769-L36ERM	48

IMPORTANT While CompactLogix 5370 controllers offer the option of using Ethernet node count to effectively design a control system, the controllers do have connection limits on an EtherNet/IP network.

For more information on how to design EtherNet/IP network use in your CompactLogix 5370 control system, see these resources:

- The EtherNet/IP Capacity Tool available at http://www.rockwellautomation.com/rockwellautomation/products-technologies/integrated-architecture/tools/overview.page#/tab3.

  The EtherNet/IP Capacity Tool helps you in the initial layout of your EtherNet/IP network.

- Ethernet Design Considerations Reference Manual, publication ENET-RM002

- Appendix B, Connections over an EtherNet/IP Network on page 315.

Devices Included in the Node Count

Any devices that you add directly to the local Ethernet I/O configuration are counted toward the node limitation of the controller. The following are example devices that are added to the I/O configuration section in your project and must be counted:

- Remote communication adapters
- I/O modules that are directly connected to the EtherNet/IP network, for example the 1732E-IB16M12R ArmorBlock® EtherNet/IP module
- Motion devices, such as drives
- Remote controllers
- HMI devices that are included in the I/O configuration section, for example, PanelView Plus terminals
- Linking devices, such as the 1788-EN2DNR, Ethernet-to-DeviceNet linking device
- Third-party devices that are directly connected to the EtherNet/IP network

Devices Excluded from the Node Count

When considering the Ethernet node limitation of a CompactLogix 5370 controller, you do not count Ethernet devices that exist on the EtherNet/IP network but are not added to the I/O configuration section of the project.

The following devices are **not added** to the I/O configuration section in your project and are **not counted** among the total number of nodes:

- Computer
- HMIs that are not added to the I/O configuration section, for example, PanelView Plus terminals
- MSG instructions
- Devices the CompactLogix 5370 controllers use a socket interface to communicate with.

  For example, the following devices require communication via a socket interface:
  - Modbus TCP/IP device
  - Barcode scanners

EtherNet/IP Network Topologies

CompactLogix 5370 controllers support these EtherNet/IP network types:

- Device-level Ring Network Topology
- Linear Network Topology
- Star Network Topology

Each of these EtherNet/IP network topologies supports applications that use Integrated Motion over an EtherNet/IP network, if necessary.

Device-level Ring Network Topology

A DLR network topology is a single-fault tolerant ring network that is intended for the interconnection of automation devices. A DLR network is comprised of Supervisor (Active and Backup) nodes and Ring nodes.

DLR network topologies automatically convert to linear network topologies when a fault is detected. The conversion to the new network topology maintains communication of data on the network. The fault condition is typically easily detected and corrected.

CompactLogix 5370 controllers connect directly to a DLR network topology, that is, without requiring a 1783-ETAP tap to connect to the network. The controllers can function in any of the roles on a DLR network topology, that is, active supervisor node, back-up supervisor node or ring node.

IMPORTANT The topology graphics that are shown in this section are examples of applications that use only DLR network topologies.

We recommend that you exercise caution if you consider designing an application that includes the connection of a DLR topology with a linear or star network topology.

For more information on using a DLR network topology, see the EtherNet/IP Embedded Switch Technology Application Guide, publication ENET-AP005.

Figure 7 shows an example 1769-L18ERM-BB1B control system using a DLR network topology.

Figure 7 - Example 1769-L18ERM-BB1B Control System Using DLR Network Topology

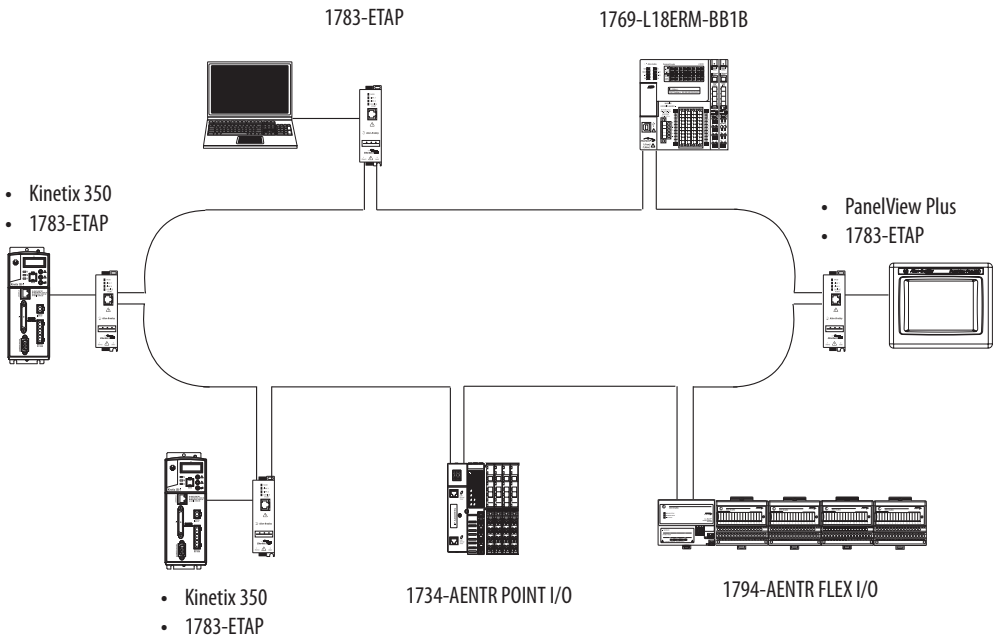

Figure 8 shows an example 1769-L27ERM-QBFC1B control system using a DLR network topology.

Figure 8 - Example 1769-L27ERM-QBFC1B Control System Using DLR Network Topology

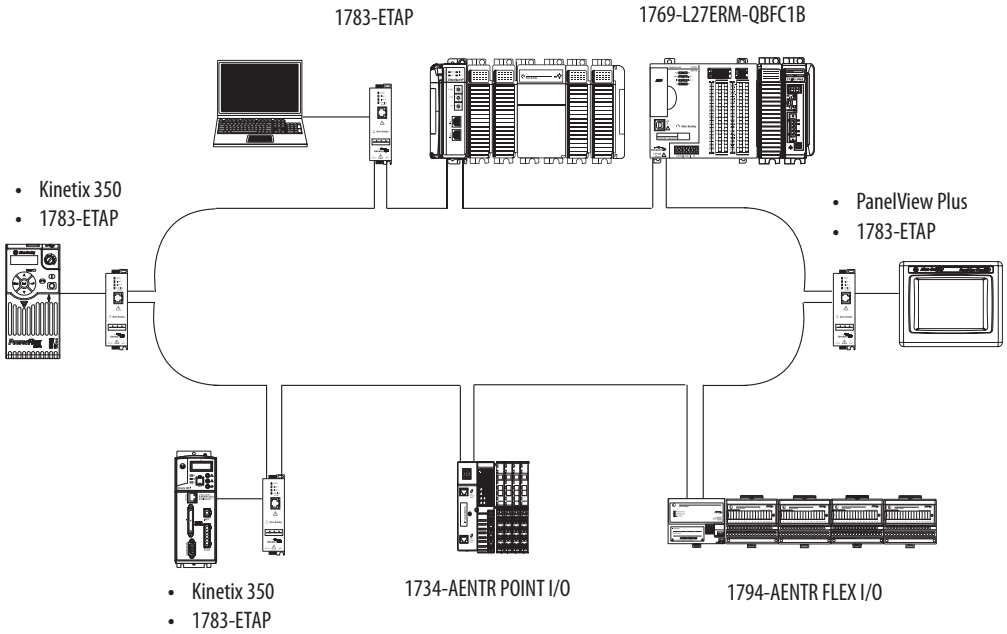

Figure 9 shows an example 1769-L33ERM control system using a DLR network topology.

Figure 9 - Example 1769-L33ERM Control System Using a DLR Network Topology

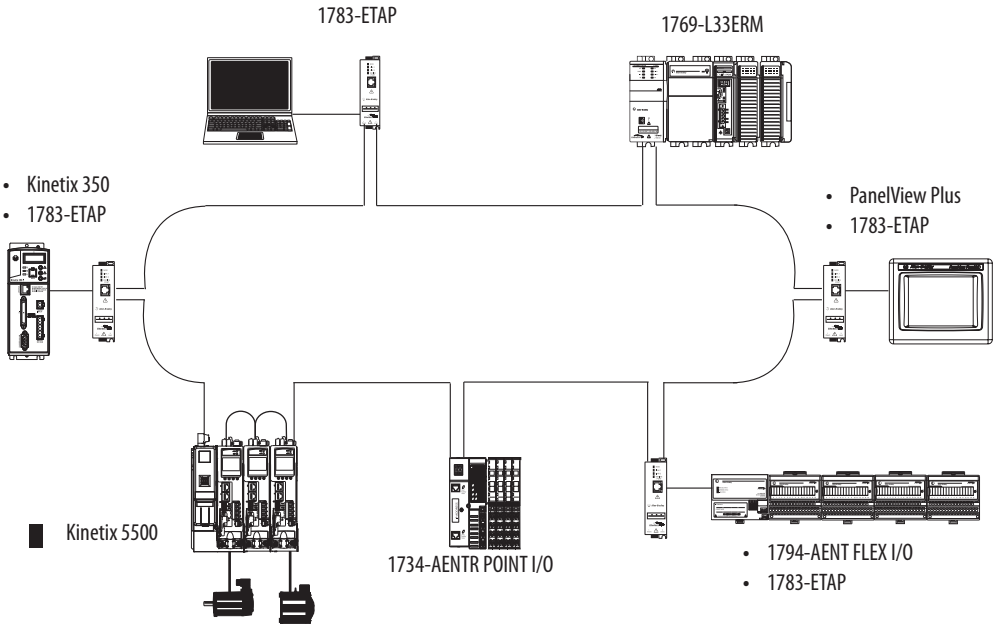

Linear Network Topology

A linear network topology is a collection of devices that are daisy-chained together across an EtherNet/IP network. Devices that can connect to a linear network topology use embedded switch technology to remove any need for a separate switch, as required in Star network topologies.

Figure 10 shows an example 1769-L18ERM-BB1B control system using a linear network topology.

Figure 10 - Example 1769-L18ERM-BB1B Control System Using a Linear Network Topology

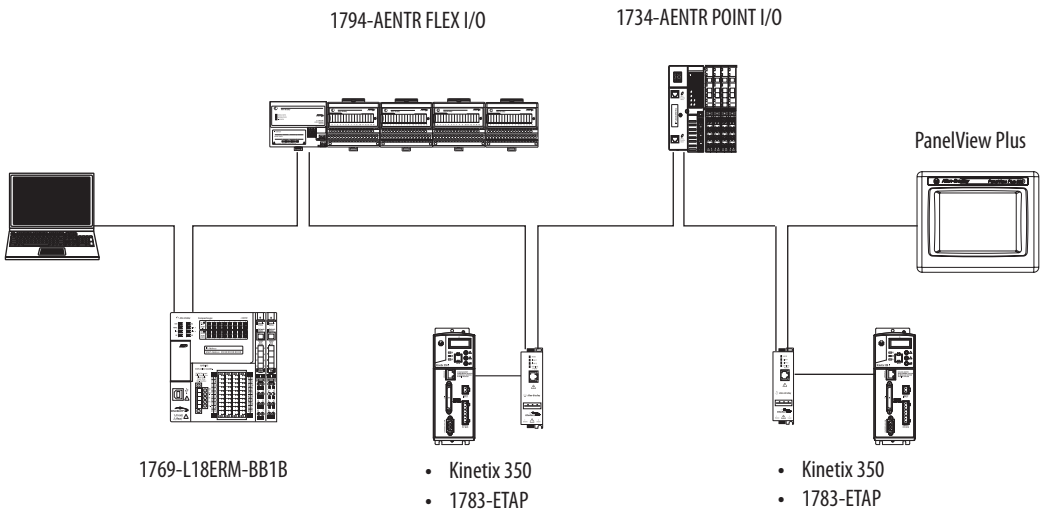

Figure 11 shows an example 1769-L24ER-QB1B control system using a linear network topology.

Figure 11 - Example 1769-L24ER-QB1B Control System Using a Linear Network Topology

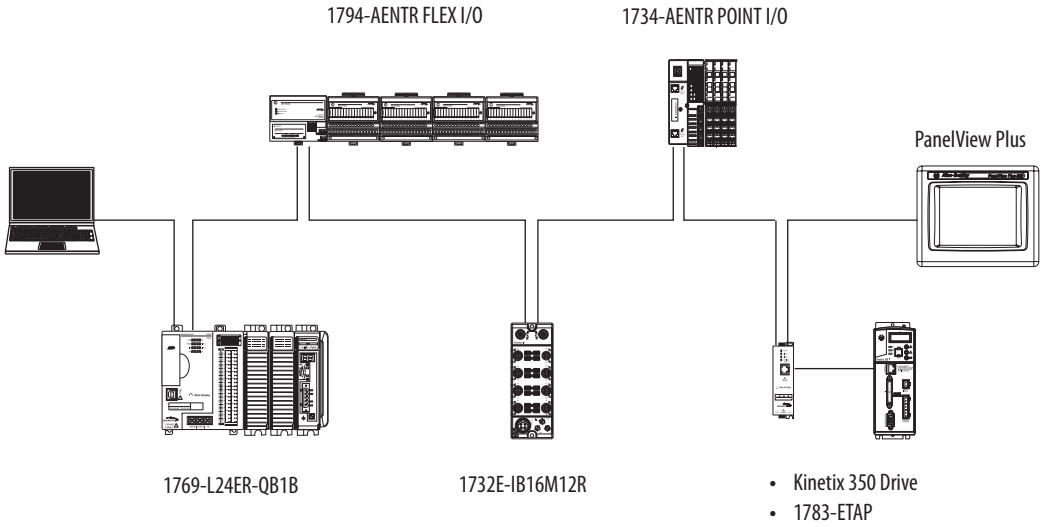

Figure 12 shows an example 1769-L33ERM control system using a linear network topology.

Figure 12 - Example 1769-L33ERM Control System Using a Linear Network Topology

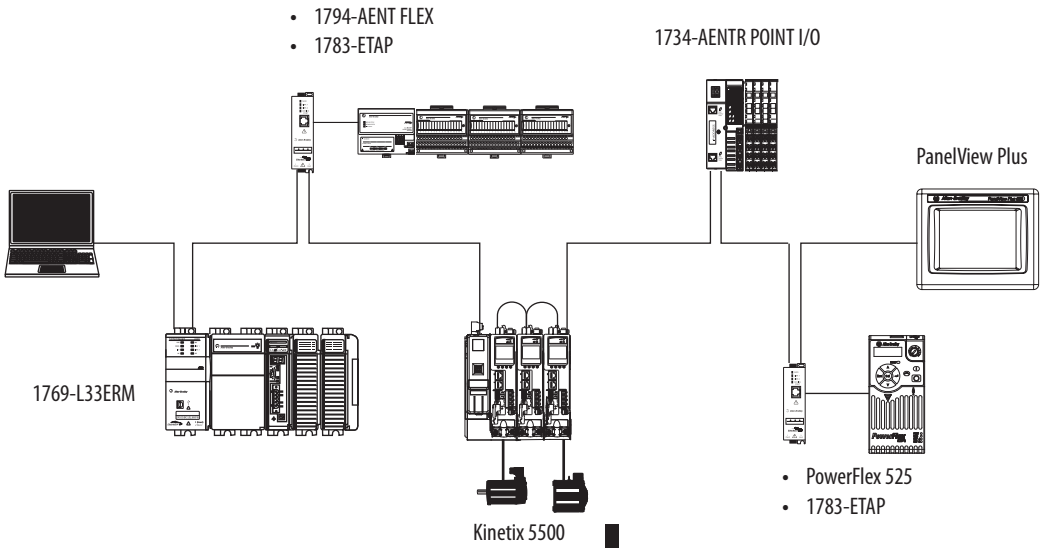

Star Network Topology

A star network topology is a traditional EtherNet/IP network that includes multiple devices that are connected to each other via an Ethernet switch.

Figure 13 show a 1769-L18ERM-BB1B control system using a star topology.

Figure 13 - Example1769-L18ERM-BB1B Control System Using a Star Network Topology

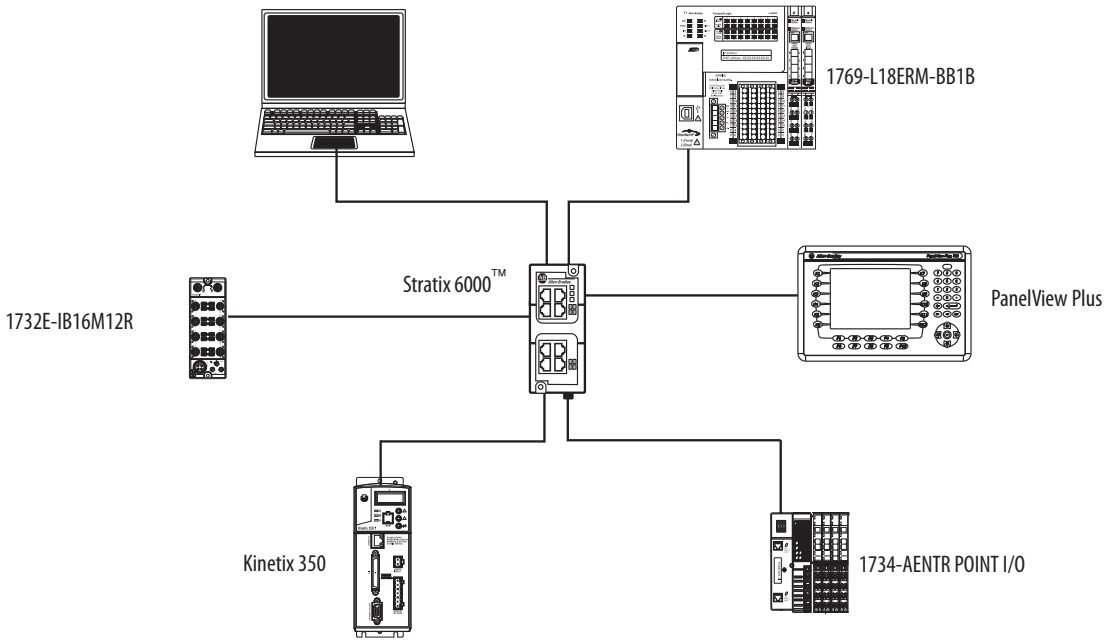

Figure 14 show a 1769-L27ERM-QBFC1B control system using a star topology.

Figure 14 - Example 1769-L27ERM-QBFC1B Control System Using a Star Network Topology

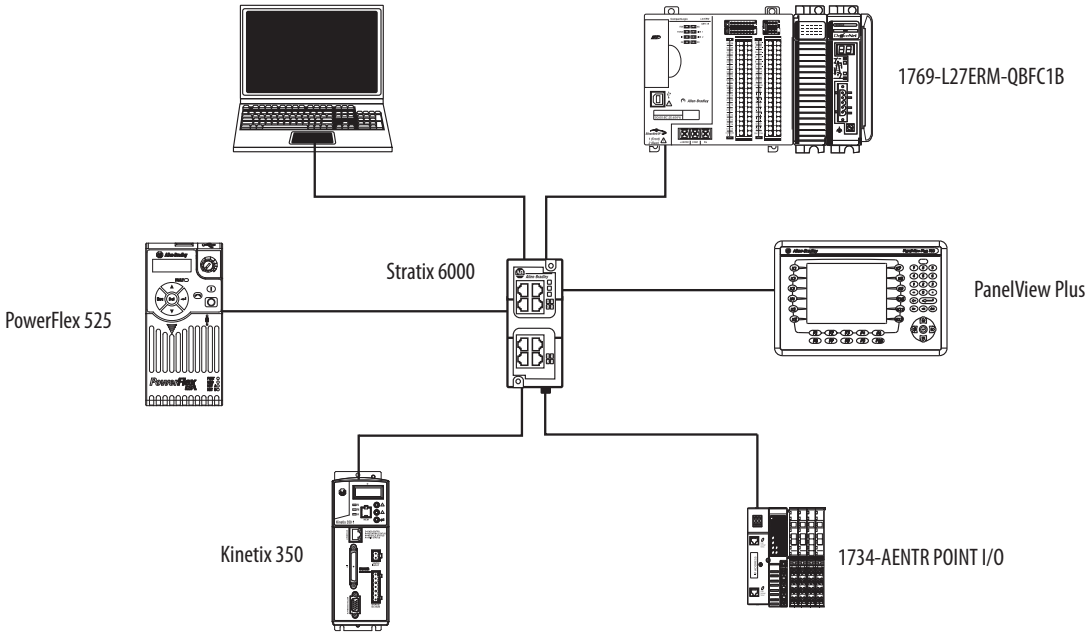

Figure 15 shows an example 1769-L33ERM control system using a star topology.

Figure 15 - Example 1769-L33ERM Control System Using a Star Network Topology

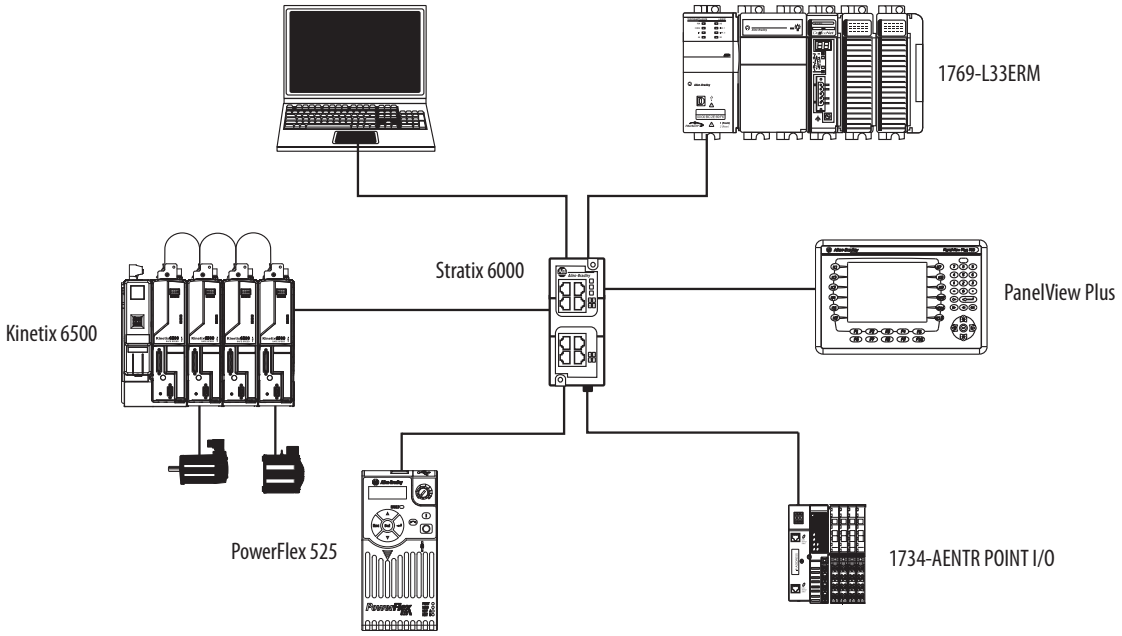

Socket Interface with CompactLogix 5370 Controllers

The CompactLogix 5370 controller can use socket interfaces to communicate with Ethernet devices that do not support the EtherNet/IP application protocol.

Examples of devices that do not support the EtherNet/IP application protocol but can be used in a CompactLogix 5370 controller application include the following:

- Modbus TCP/IP device
- Barcode scanners
- RFID readers

The socket interface is implemented via the Socket Object. CompactLogix 5370 controllers communicate with the Socket Object via MSG instructions. All CompactLogix 5370 controllers must use unconnected MSG instructions with socket interfaces.

The Socket Object service lets the controller perform these actions:

- Open connections
- Accept incoming connections
- Send data
- Receive data

To communicate with another device, you must understand the application protocol of the other device. The CompactLogix 5370 controller has no application protocol knowledge. The controller makes the socket services available to its program.

Number and Type of Sockets

The CompactLogix 5370 controllers support up to 32 socket instances. Each instance can be one of these types:

- UDP socket - Sends and receives UDP datagrams.
- TCP client socket - The Logix5000 program initiates the connection.
- TCP server socket - Another device initiates the connection to the Logix5000 program.
- TCP listen socket - Listens on a specified port number for incoming connections.

The options available for UDP and TCP send and receive services are described in this table.

Type	Communication	Send (Write)	Receive (Read)
UDP	Unicast	Yes	Yes
	Multicast	Yes	Yes
	Broadcast	Yes	Yes
TCP	Unicast	Yes	Yes
	Multicast	N/A	N/A
	Broadcast	N/A	N/A

You must have a listen socket for each TCP port number that accepts connections. Multiple TCP server sockets can share a listen socket if the connections are made to the same port number.

You can partition the available socket instances between UDP and TCP sockets in these ways:

- Use all instances for client TCP connections.
- Use one instance to listen for incoming TCP connections and accept the remaining connections from other devices.
- Perform TCP client and server operations.
- Perform TCP and UDP operations.

These socket services are available.

Socket Service	Socket Instance
SocketCreate	Server or client
OpenConnection	Client
AcceptConnection	• If you issue an AcceptConnection service, the instance is listen type. • If the AcceptConnection service returns an instance as a result of an incoming connection request, the socket instance is server type
ReadSocket	Server or client
WriteSocket	
DeleteSocket	
DeleteAllSockets	
ClearLog	
JoinMulticastAddress	
DropMulticastAddress	

Once you open a connection on a client socket instance, you cannot use the same socket instance to accept incoming connections. Similarly, if you accept connections on a socket instance, you cannot use the instance to open outgoing connections. This behavior is consistent with standard socket API behavior.

Message Instructions to Use Socket Services

IMPORTANT This section describes only one of the socket services available with your CompactLogix 5370 controller.

For more information on all socket services, see the EtherNet/IP Socket Interface Application Technique, publication ENET-AT002.

In the CompactLogix 5370 controller program, use a CIP Generic MSG instruction to request socket services.

The following example graphics show the Configuration and Communication tabs for a MSG instruction that uses the OpenConnection service type. The parameter values for this MSG type are defined Table 5.

IMPORTANT Before you can configure the MSG instruction, you must create a user-defined data type (UDT) that is available in the Source Element parameter. See MSG Source Element for more information on how to create a UDT.

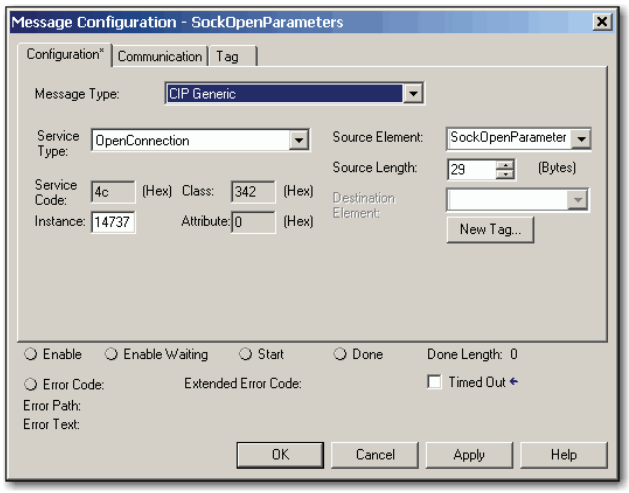

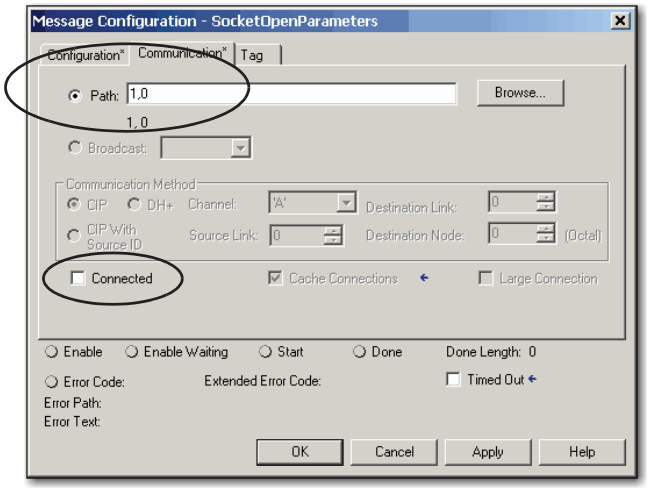

IMPORTANT: Keep the following in mind when using sockets with CompactLogix 5370 controllers:

- A significant difference between CompactLogix 5370 controllers and other Logix5000 controllers is the communication path.

  CompactLogix 5370 controllers do not require a separate EtherNet/IP network communication module, for example, a 1756-EN2T module. In the case of the CompactLogix 5370 controllers, the MSG is sent to the controller itself by using the path '1,0'.

- All CompactLogix 5370 controllers must use **unconnected** MSG instructions for socket servers. When you configure a message for a CompactLogix 5370 controller, make sure the Connected checkbox on the Message Configuration dialog box is cleared.

Table 5 - Parameter Values for OpenConnection Service

Configuration Parameter	Description
MSG Type	CIP Generic
Service Type	OpenConnection
Service Code	4c
Class	342
Instance	from CreateSocket
Attribute	0
Source Element	Application specific
Source Length	

MSG Source Element

You must also create a user-defined data type (UDT) to use this service. This example graphic shows the UDT screen. The parameter values for this MSG type are defined in Table 6.

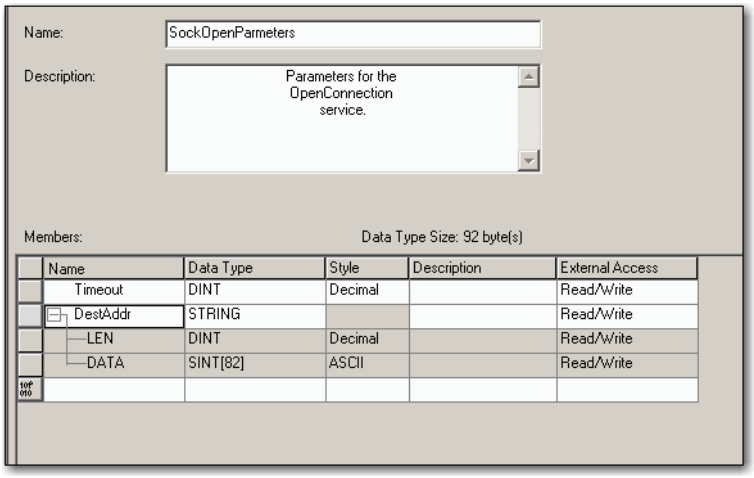

Table 6 - Parameter Values for OpenConnection Service

Configuration Parameter	Element	Description
Timeout	DINT	Specify the timeout in milliseconds.
DestAddr	STRING	Specify an array of characters (maximum of 64) to define the destination of the connection. Specify one of the following: • Hostname?port=xxx • IPAddr?port=xxx For example, to specify an IP address, enter 10.88.81.10?port=2813
.LEN	DINT	The length of the destination address.
.DATA	SINT array	The array that contains the destination address.

For more information on socket interface, see the following:

- EtherNet/IP Socket Interface Application Technique, publication ENET-AT002
- Rockwell Automation Sample Code Library at http://samplecode.rockwellautomation.com/

Quality of Service (QoS) and I/O Module Connections

CompactLogix 5370 controllers support Quality of Service (QoS) technology. QoS lets the controller prioritize EtherNet/IP network traffic. By default, the CompactLogix 5370 controllers are QoS-enabled. QoS can be disabled by configuring a message instruction in the Logix Designer application.

Some EtherNet/IP devices do not support QoS technology unless the firmware of the device is upgraded to a required minimum firmware revision level. For example, the ControlLogix® 1756-ENBT communication module must use firmware revision 4.005 or later to support QoS technology.

To make sure communication between CompactLogix 5370 controllers and I/O modules are maintained, verify that the EtherNet/IP devices use the minimum firmware revision level of the product that is required to support QoS technology.

For more information on the following, see Rockwell Automation Knowledgebase Tech Note 66325 (the document is available at http://www.rockwellautomation.com/knowledgebase/):

- Minimum firmware revision levels of EtherNet IP devices to support QoS technology
- Enable/disable QoS.

DeviceNet Network Communication

The CompactLogix 5370 L2 and L3 controllers communicate with other devices over the DeviceNet network via a Compact I/O 1769-SDN DeviceNet scanner. The DeviceNet network uses the Common Industrial Protocol (CIP) to provide the control, configuration, and data collection capabilities for industrial devices.

IMPORTANT This section applies to applications using only CompactLogix 5370 L2 and L3 controllers.

CompactLogix 5370 L1 controllers do not operate on DeviceNet networks.

Available Software

The software applications that are listed in this table are **required** when using a CompactLogix 5370 L2 or L3 controller on a DeviceNet network.

Software	Required Version	Functions
RSLogix 5000	20.*xx.xx* - For CompactLogix 5370 controllers using firmware revision 20.*xxx*.	Configure the CompactLogix project
Studio 5000 environment	21.00.00 or later - For CompactLogix 5370 controllers using firmware revision 21.000 or later.	
RSLinx Classic	2.59.00 or later(1), (2)	• Configure communication devices • Provide diagnostics • Establish communication between devices
RSNetWorx for DeviceNet	One of the following: • 11.00.00 or later if used with RSLogix 5000 software, version 20.xx.xx • 21.00.00 or later if used with the Studio 5000 environment, version 21.00.00 or later	• Configure DeviceNet devices • Define the scanlist for the DeviceNet network

(1) CompactLogix 5370 L2 controllers require RSLinx Classic software, version 2.59.01 or later.

(2) We recommend that you use RSLinx Classic software, version 3.51.00 or later, with the Studio 5000 environment, version 21.00.00 or later.

Figure 16 shows an example 1769-L27ERM-QBFC1B control system using a DeviceNet network.

Figure 16 - Example 1769-L24ER-QB1B Control System Using a DeviceNet Network

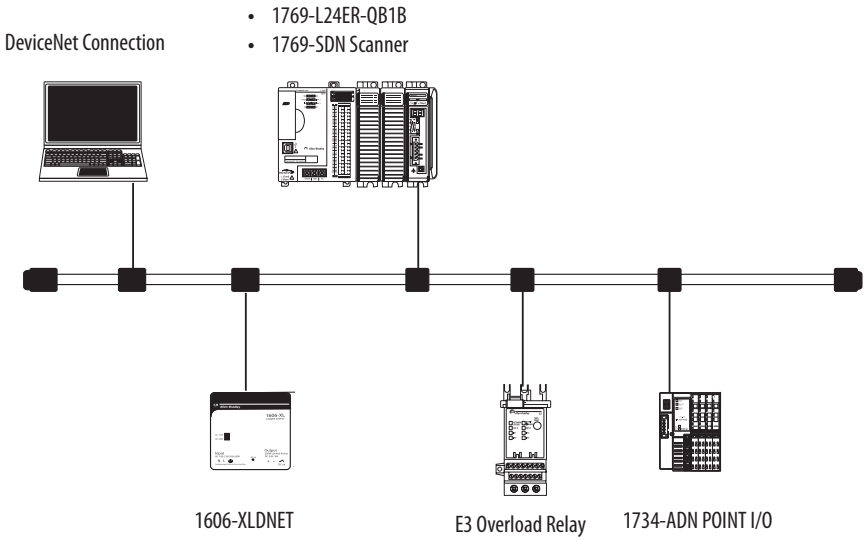

Figure 17 shows an example 1769-L33ERM using a DeviceNet network.

Figure 17 - Example 1769-L33ERM Control System Using a DeviceNet Network

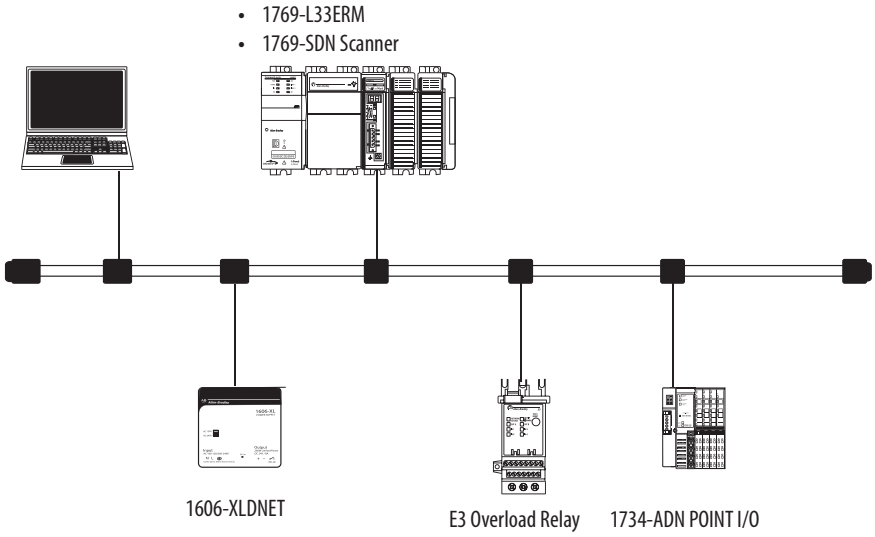

Compact I/O 1769-SDN DeviceNet Scanner

You connect a CompactLogix 5370 L2 or L3 controller to a DeviceNet network via a Compact I/O 1769-SDN DeviceNet scanner.

Before installing the scanner, consider the following:

- You can connect the scanner to an adjacent controller, power supply, or I/O module.
- You must account for these two requirements jointly:
  - **Power Supply Distance Rating** - Described on page 146
  - **Current Capacity in CompactLogix 5370 L3 Control Systems** - Described on page 150
- The scanner, as a master, can own up to 63 slave I/O nodes.
- Another DeviceNet master can own a scanner that is simultaneously a master and be a slave.

The scanner has this functionality:

- Supports messaging to devices, not controller to controller
- Supports control-level network to device-level network for programming, configuration, control, or data collection
- Supports back up your CompactLogix 5370 L2 or L3 controller on the DeviceNet network

  For more information on using the 1769-SDN to back up your CompactLogix 5370 L2 or L3 controller, see the 1769-SDN DeviceNet Scanner Module User Manual, publication 1769-UM009.
- Shares a common application layer with EtherNet/IP networks
- Offers diagnostics for improved data collection and fault detection

Power Supply Distance Rating

CompactLogix 5370 L2 and L3 control systems allow you to install 1769-SDN scanners as local expansion modules. The 1769-SDN scanner has a power supply distance rating that you must consider before installing it.

Power supply distance rating is the number of slots a 1769-SDN scanner can be installed away from the power supply. The 1769-SDN scanner has a power supply distance rating of four. Therefore, your CompactLogix 5370 L2 or L3 control system can include up to three modules between the 1769-SDN scanner and the power supply.

The power supply distance rating of the 1769-SDN scanner as a design consideration differs by CompactLogix L2 controller catalog number.

CompactLogix 5370 L2 Control Systems

In a CompactLogix 5370 L2 control system, you can install a 1769-SDN scanner on the right side of the control system. The controller has an embedded power supply, which disallows the installation of 1769-SDN scanners between the controller and the power supply.

Additionally, the controller has embedded I/O modules that disallow installation of the 1769-SDN scanner directly to the right of the embedded power supply. CompactLogix 5370 L2 control systems have one or two embedded I/O modules, described as follows:

- 1769-L24ER-QB1B controller - One embedded I/O module
- 1769-L24ER-QBFC1B and 1769-L27ERM-QBFC1B controllers - Two embedded I/O modules

While the embedded I/O modules are not considered local expansion modules, you must still include each embedded I/O module in the module slot count when determining where to install the 1769-SDN scanner as a local expansion module.

The farthest local expansion module slot where you can install the 1769-SDN scanner in a CompactLogix 5370 L2 control system is module slot number two or three as determined by the controller catalog number that is used in the control system.

Table 7 describes the farthest local expansion module slot where you can install a 1769-SDN scanner and meet its power supply distance rating requirement.

Table 7 - Example CompactLogix 5370 L2 Control Systems with a 1769-SDN Scanner

Controller Cat. No.	Number of Embedded I/O Modules	1769-SDN Scanner Power Supply Distance Rating Calculation Impact
1769-L24ER-QB1B	1	The embedded I/O module is the first module in the module count. At its maximum power supply distance rating, the 1769-SDN scanner can be installed in slot 3 of the local expansion modules, as shown in the following graphic. 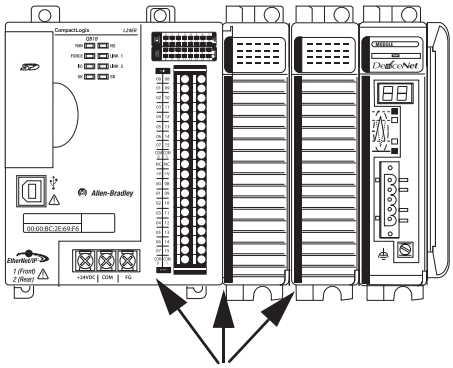 Three modules between the power supply and the 1769-SDN scanner. With this controller catalog number, you can only install up to two local expansion modules between the controller and the 1769-SDN scanner.

Table 7 - Example CompactLogix 5370 L2 Control Systems with a 1769-SDN Scanner

Controller Cat. No.	Number of Embedded I/O Modules	1769-SDN Scanner Power Supply Distance Rating Calculation Impact
1769-L24ER-QBFC1B 1769-L27ERM-QBFC1B	2	The embedded I/O modules are the first two modules in the module count. At its maximum power supply distance rating, the 1769-SDN scanner can be installed in slot 2 of the local expansion modules, as shown in the following graphic. 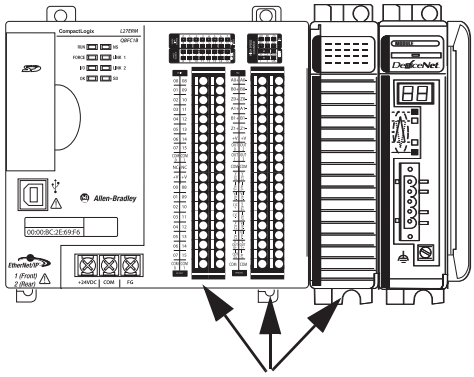 Three modules between the power supply and the 1769-SDN scanner. With this controller catalog number, you can only install one local expansion modules between the controller and the 1769-SDN scanner. **IMPORTANT** When counting I/O modules to determine the 1769-SDN scanner placement in a 1769-L24ER-QBFC1B or 1769-L27ERM-QBFC1B control system, the embedded I/O module appearance is different between the physical appearance and the appearance in the application of the module. The physical appearance is shown in the previous graphic. The second module is two rows of termination points below one set of status indicators. In the application, the second embedded I/O module appears as two modules in the Controller Organizer each with their own slot number, that is [2] and [3]. When the 1769-SDN scanner is installed in the farthest local expansion module slot possible, that is the fourth module in the control system, it appears with a [5] designation in the Controller Organizer, as shown in the following graphic. 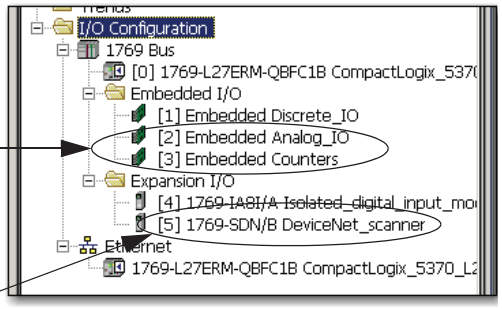 Modules [2] and [3] are shown separately but are considered one module when counting modules to meet power supply distance rating requirements. 1769-SDN scanner is shown as module [5] in this location but considered the fourth module when counting modules to meet power supply distance rating requirements.

CompactLogix 5370 L3 Control Systems

CompactLogix 5370 L3 control systems do not have embedded I/O modules. You begin counting local expansion slots with the first Compact I/O module installed next to the power supply when determining where to install a 1769-SDN scanner and meet its power supply distance rating.

In CompactLogix 5370 L3 control systems, you can install 1769-SDN scanners to the left or right side of the power supply. You can also use local and extra banks in CompactLogix 5370 L3 control systems, with each allowing the inclusion of a 1769-SDN scanner.

In the local bank, the controller must be the leftmost device in the system and you can only install up to three modules between the controller and the power supply. Therefore, any 1769-SDN scanners that are installed to the left of the power supply in the local bank, are in a module slot that meets the power supply distance rating requirements of the module.

CompactLogix 5370 L3 control systems also support the use of extra banks for the local expansion modules of the system. Each additional bank requires a 1769 Compact I/O power supply. The bank can be designed with local expansion modules on either side of the power supply.

In this case, you must install the 1769-SDN scanner with no more three Compact I/O modules between the scanner and the power, regardless of whether the modules are installed to the left or right of the power supply.

This graphic shows 1769-SDN scanners that are installed in a 1769-L36ERM control system that meet the power supply distance rating of the module.

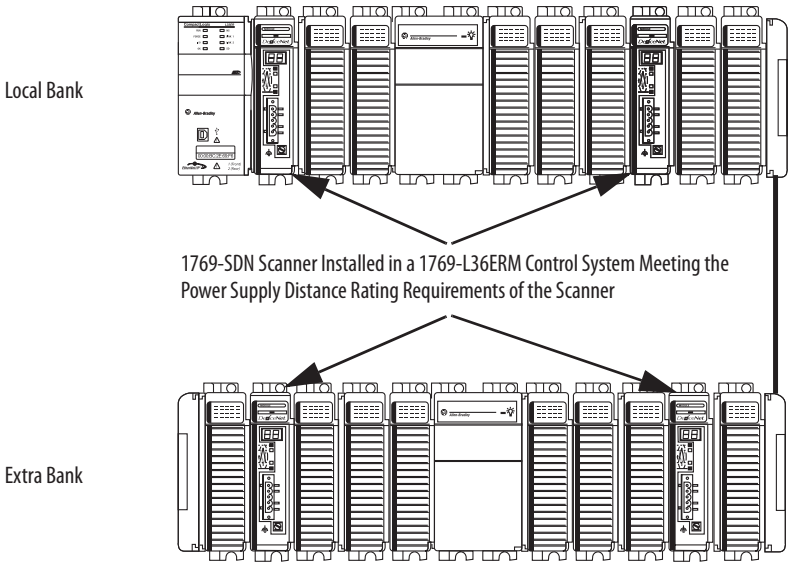

Current Capacity in CompactLogix 5370 L3 Control Systems

In a local or extra bank, the modules that are installed on either side of the power supply cannot draw more current than the power supply can supply. This requirement partially dictates module placement on the bank.

For example, if a bank uses a 1769-PA2 Compact I/O power supply, each side of the bank has a current capacity of 1A at 5V DC and 0.4A at 24V DC. Because a 1769-SDN scanner has a current draw of 440 mA at 5 V DC and 0 mA at 24 V DC, you can only install up to two scanners on each side of the power supply in the bank in this case.

For more information on 1769 Compact I/O power supply maximum current capacity and calculations you can use to design the modules that are used in local or extra banks, see Calculate System Power Consumption on page 249.

Use I/O Modules with CompactLogix 5370 L1 Controllers

This chapter explains how to use I/O modules in a CompactLogix 5370 L1 control system.

Topic	Page
Select I/O Modules	151
Validate I/O Layout	170
Use the Event Task	175
Configure I/O	179
Configure Distributed I/O Modules on an EtherNet/IP Network	181
Configure Distributed I/O Modules on an EtherNet/IP Network	181
Monitor I/O Modules	184

Select I/O Modules

CompactLogix 5370 L1 control systems offer these I/O module options:

- Embedded I/O Modules
- Local Expansion Modules
- Distributed I/O Modules over an EtherNet/IP Network

Connect Field Power to I/O Devices Connected to a CompactLogix 5730 L1 Control System

Chapter 1, Connect Power to the Controller (Series B) on page 30, describes how to connect a dedicated, Class 2/SELV-listed external 24V DC power source to the VDC+ and VDC- terminals on the removable connector that is shown in the following graphic. Those connections provide power to only the system-side of the embedded I/O and local expansion I/O modules.

IMPORTANT You must connect a separate external power source to the FP+ and FP- terminals on the removable connector on the controller to power the field-side circuitry of the embedded I/O modules and the local expansion modules for only series A L1 controllers. See Appendix C for further information.

Power connections to the FP+ and FP- terminals provides power to input and output devices that are connected to the embedded I/O modules or local expansion modules of the controller. For example, input or output devices, such as a barcode scanner.

The embedded I/O of the controller and the field-side power of the local expansion modules is 24V DC nominally with an input range of 10...28.8V DC.

The following graphic shows the removable connector.

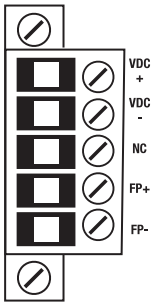

IMPORTANT The controller is grounded once it is installed on a DIN rail as described in Mount the System on page 24.

Consider these points before completing the steps in this section:

- This section describes how to connect a 24V DC power source to power input or output devices that are connected to the embedded I/O or local expansion modules of the CompactLogix 5370 L1 controller via FP+ and FP- terminals.

  For information on how to connect 24V DC power to the CompactLogix 5370 L1 controller and the POINTBus backplane via VDC+ and VDC- terminals on the removable connector, see page 30.

- The external 24V DC power source that is connected to the FP+ and FP- terminals **must be separate** from the power source that is dedicated to power the controller via the VDC+ and VDC- terminals for only series A controllers (see Appendix C).

- You can use the external 24V DC power source that provides power to the FP+ and FP- terminals to power other components or devices in the application.

- The external 24V DC power source that provides power to the FP+ and FP- terminals can be installed on the same DIN rail as the external 24V DC power source that provides power to the VDC+ and VDC- terminals or you can install the external 24V DC power sources on separate DIN rails.

- Use a power source that most effectively meets your application needs. That is, calculate the power requirements of your application before choosing a power source to avoid using a power source that far exceeds your application requirements:

  – Limit field power current to 3 A or use a 1734-FPD module to avoid blowing the internal fuse.
  – Install a user-replaceable fuse with overcurrent protection of 4...6 A @ 52.5...68.25 A^2t in line between the incoming power and the FP+ terminal.

- This section assumes that any DIN rail you use has been grounded following Industrial Automation Wiring and Grounding Guidelines, publication 1770-4.1.

- For example purposes, this section describes how to use a 1606-XLE80E, Class 2 switched-mode power supply with the FP+ and FP- terminals. The exact steps for other external power supplies can vary from the steps that are described here.

IMPORTANT Do **not** use the following steps to connect power to the CompactLogix 5370 series A L1 controller. See Appendix C for steps to connect power to the CompactLogix 5370 series A L1 controller. The steps in Appendix C provide an optional way to connect power to a series B L1 controller.

Complete these steps to connect power to the CompactLogix 5370 L1 controller.

1. Verify that the separate external 24V DC power source that powers the CompactLogix 5370 L1 controller is not powered.
2. Connect wires to the + and - connections on the external 24V DC power source.

WARNING: If you connect or disconnect wiring while the field-side power is on, an electrical arc can occur. This could cause an explosion in hazardous location installations. Be sure that power is removed or the area is nonhazardous before proceeding.

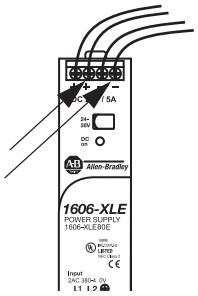

3. Loosen the screws that secure the removable connector to the CompactLogix 5370 L1 controller and pull the connector off the controller.

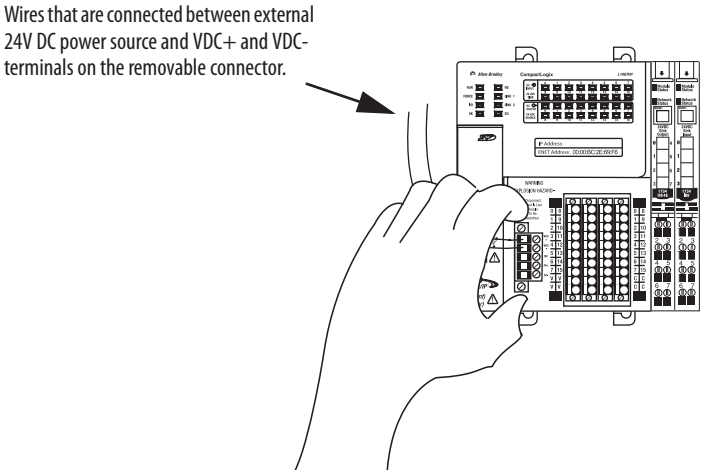

4. Connect the wire that is connected to the + terminal on the external 24V DC power source to the FP+ terminal, that is, the fourth terminal from the top, on the removable connector.

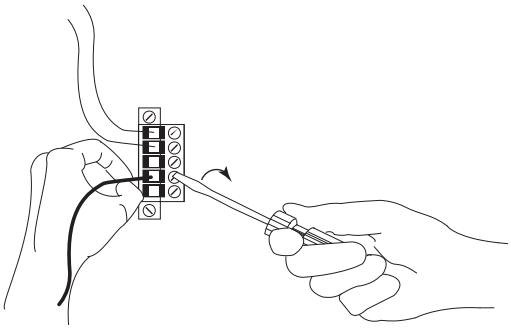

5. Connect the wire that is connected to the - terminal on the external 24V DC power source to the FP- terminal, that is the fifth terminal from the top, on the removable connector.

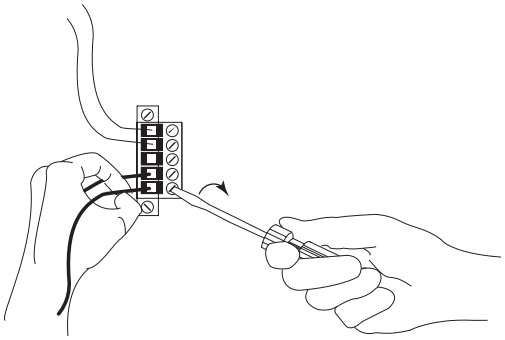

6. Plug the removable connector into the controller.
7. Secure the removable connector in place.

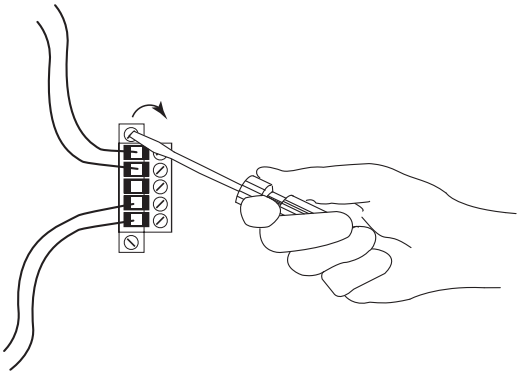

8. Turn on power to the separate external 24V DC power source connected to the removable connector.

The following graphic shows separate external 24V DC power supply that is connected to the VDC+/VDC- and FP+/FP- terminals on the removable connector, respectively.

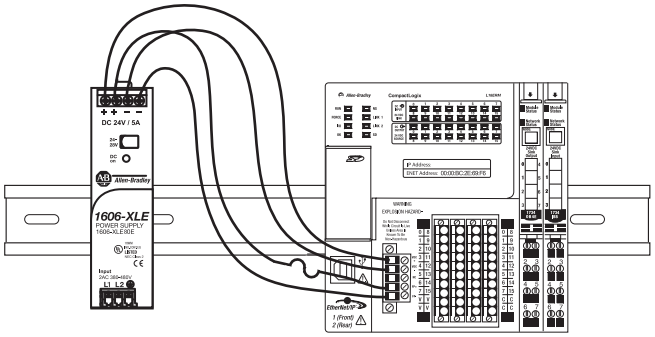

IMPORTANT: No wires are connected to the NC terminal.

Embedded I/O Modules

CompactLogix 5370 L1 controllers provide an embedded power supply and an embedded I/O module with these points:

- 16 sinking 24V DC digital input points
- 16 sourcing 24V DC digital output points

The following diagram shows the wiring terminals on the embedded I/O module.

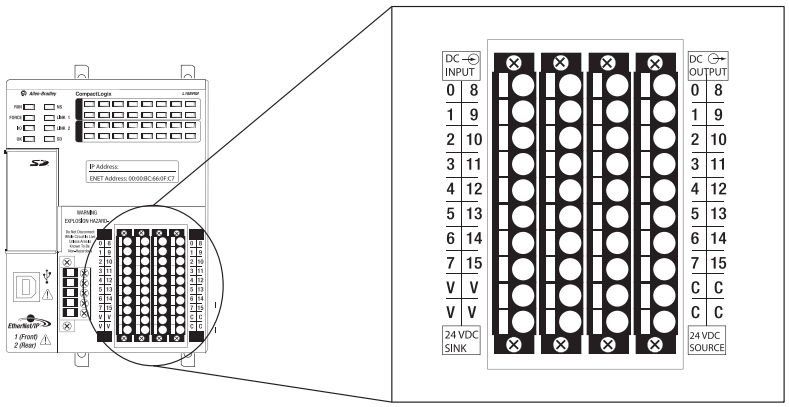

Consider the following when you connect input or output devices to the embedded I/O modules of your CompactLogix 5370 L1 controller:

- You must connect an external 24V DC power source to the FP+ and FP- terminals on the removable connector on the controller to power input and output devices that are connected to the embedded I/O modules on the controller:
  - Series A controllers require an extra external 24V DC power source for the FP+ and FP- terminal connections. For more information on how to connect an extra external power source for series A L1 controller to the FP+ and FP- terminals, see Appendix C.
  - Series B controllers use the external 24V DC power source that is connected to the VDC+ and VDC- terminals on the controller for the FP+ and FP- terminal connections. Series B controllers can also use an extra external 24V DC power source for the FP+ and FP- terminal connections. See Appendix C for more information on how to connect the extra external power source to the FP+ and FP- terminals. For more information on how to connect the external power source to the FP+ and FP- terminals on the series B controller, see page 154.

  The field-side power requirement of the embedded I/O modules of the controller is 24V DC nominally with an input range of 10...28.8V DC.

- The available RPI range of the I/O points is 1.0 ms…750.0 ms and can be changed by 0.5 ms increments. The default setting is 20 ms.

IMPORTANT

- If you attempt to use an RPI value that is not valid, the application automatically rounds the value down to the closest 0.5 ms increment when you apply the change.

  For example, if you set the RPI = 1.75 ms, when you click Apply or OK, the value is rounded down to 1.5 ms and applied.

- The RPI value for embedded I/O module is intended to establish a time interval at which data is transmitted. However, the configuration of your CompactLogix 5370 L1 control system can affect the actual time interval of data transmission.

  For more information, see Estimate Requested Packet Interval on page 172.

Complete these steps to wire the input and output points on the CompactLogix 5370 L1 controller.

1. Verify that the control system is not powered.
2. Use a small screwdriver to push the spring release clip and insert the wire.

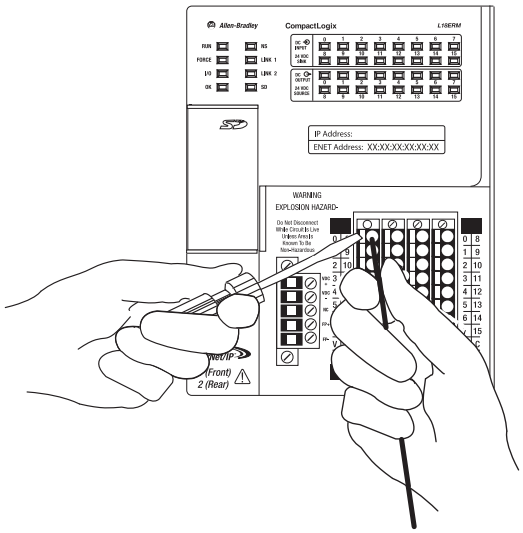

3. With the wire in place, pull the screwdriver off the spring release clip.
4. Repeat step 2 for all embedded I/O wires that are needed in your application.

To remove a wire from the removable connector, complete these steps.

1. Verify that the control system is not powered.
2. Use a small screwdriver to push the spring release clip and pull out the wire.

Remove and Replace and I/O Module Connector

Complete these steps to remove and replace and I/O module connector.

1. Verify that the control system is not powered.
2. Use a small screwdriver to loosen the screws that secure the connector to the module.

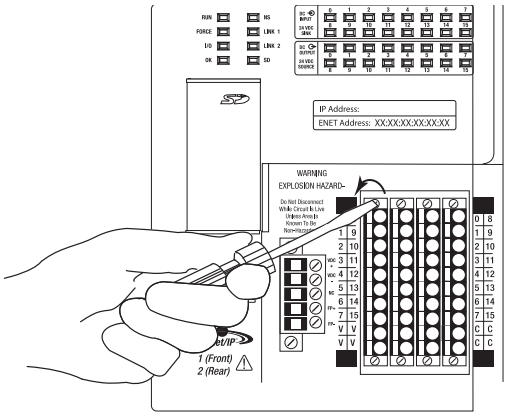

3. Pull the connector out from the I/O module to remove it.
4. Disconnect any wires from the connector.
5. Connect any wires to the replacement connector.
6. Push the replacement connector back into the I/O module.
7. Secure the connector to the I/O module with the small screwdriver.

Embedded Input Points

The embedded input points on the CompactLogix 5370 L1 controllers support 2-wire and 3-wire input devices. You can wire the input devices to be powered in one of the following methods:

- By using an **external power supply**, as shown in Figure 18 - In this case, you can monitor the input devices even if field power is interrupted, for example, by the MCR.

  This method is required if you must continue reading data from the input devices when the embedded output terminals are disabled, for example, when the use of a Master Control Relay (MCR) disrupts output power.

- By using the **V terminal** on the embedded I/O module, as shown in Figure 20 - In this case, you cannot monitor the input devices even if field power is interrupted, for example, by the MCR.

Figure 18 and Figure 19 show examples of how to power 2-wire and 3-wire input devices in your application.

IMPORTANT When using Figure 18 and Figure 19, use the following guidelines:

- With this wiring configuration, you can monitor the input devices even if field power is interrupted, for example, by the MCR. The FP- connection must be maintained as a reference for inputs to function.
- With this wiring configuration, the controller does not help protect field-side devices from overcurrent draw conditions.
- Design your application so that power consumption does not exceed the power supply ratings.
- The following figure is a wiring example that complies with the National Electrical Code (NEC) standard for isolation between system and field power.
- The FP+ terminal on the removable connector is the voltage connection.
- The FP- terminal on the removable connector is the common connection.
- The MCR must be closed for the removable connector to provide power to the embedded I/O module.
- Install a user-replaceable fuse with overcurrent protection of 4…6 A @ 52.5…68.25 A^2t in line between the incoming power and the FP+ terminal.

For series A L1 controllers **only**, you must use a separate, dedicated Class 2 power supply for the CompactLogix 5370 L1 controller and a separate power supply for the embedded I/O module (see Appendix C).

Figure 18 - CompactLogix 5370 L1 Controllers with Input Devices Powered by External Power Supplies (Series A [Alternate Series B])

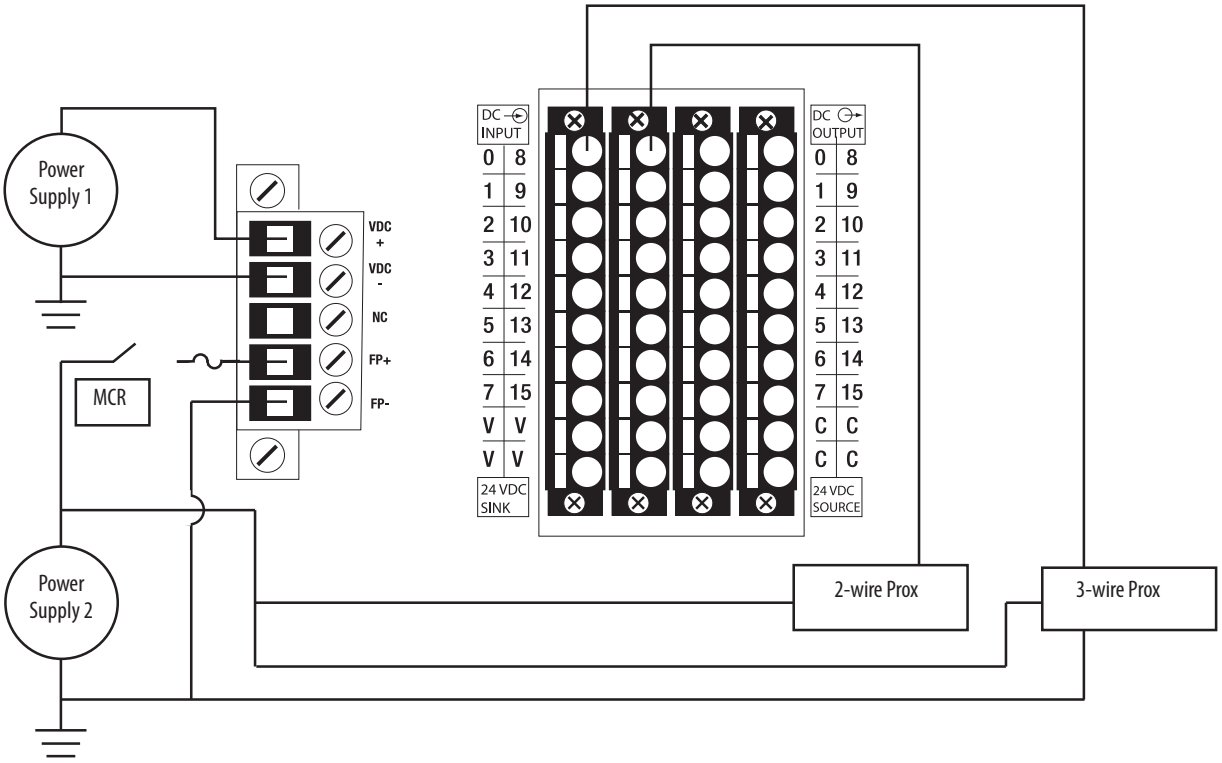

Figure 19 - CompactLogix 5370 L1 Controllers with Input Devices Powered by External Power Supplies (Series B)

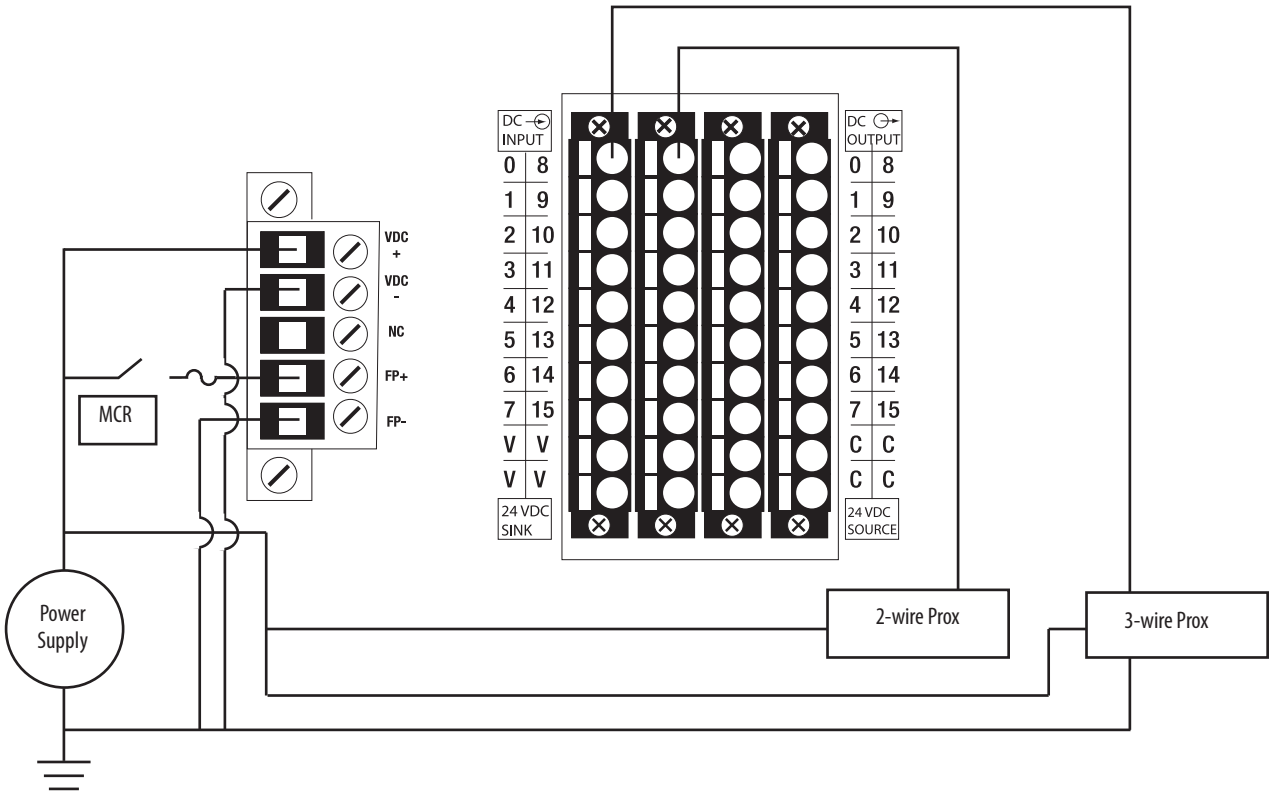

Figure 20 and Figure 21 shows examples of how to power 2-wire and 3-wire input devices in your application with connections to a V terminal.

IMPORTANT When using Figure 20 and Figure 21, use the following guidelines:

- With this wiring configuration, the input devices lose power if the removable connector does not power the embedded I/O modules.
- With this wiring configuration, the controller does not help protect field-side devices from overcurrent draw conditions.
- Design your application so that power consumption does not exceed the power supply ratings.
- The following figure is a wiring example that complies with the National Electrical Code (NEC) standard for isolation between system and field power.
- The FP+ terminal on the removable connector is the Voltage connection.
- The FP- terminal on the removable connector is the Common connection.
- The MCR must be closed for the removable connector to provide power to the embedded I/O module.
- Install a user-replaceable fuse with overcurrent protection of 4…6 A in line between the incoming power and the FP+ terminal.

For series A L1 controllers **only**, you must use a separate, dedicated Class 2 power supply for the CompactLogix 5370 L1 controller and a separate power supply for the embedded I/O module (see Appendix C).

Figure 20 - CompactLogix 5370 L1 Controllers with Input Devices Powered by a V Terminal on Embedded I/O Module (Series A [Alternate Series B])

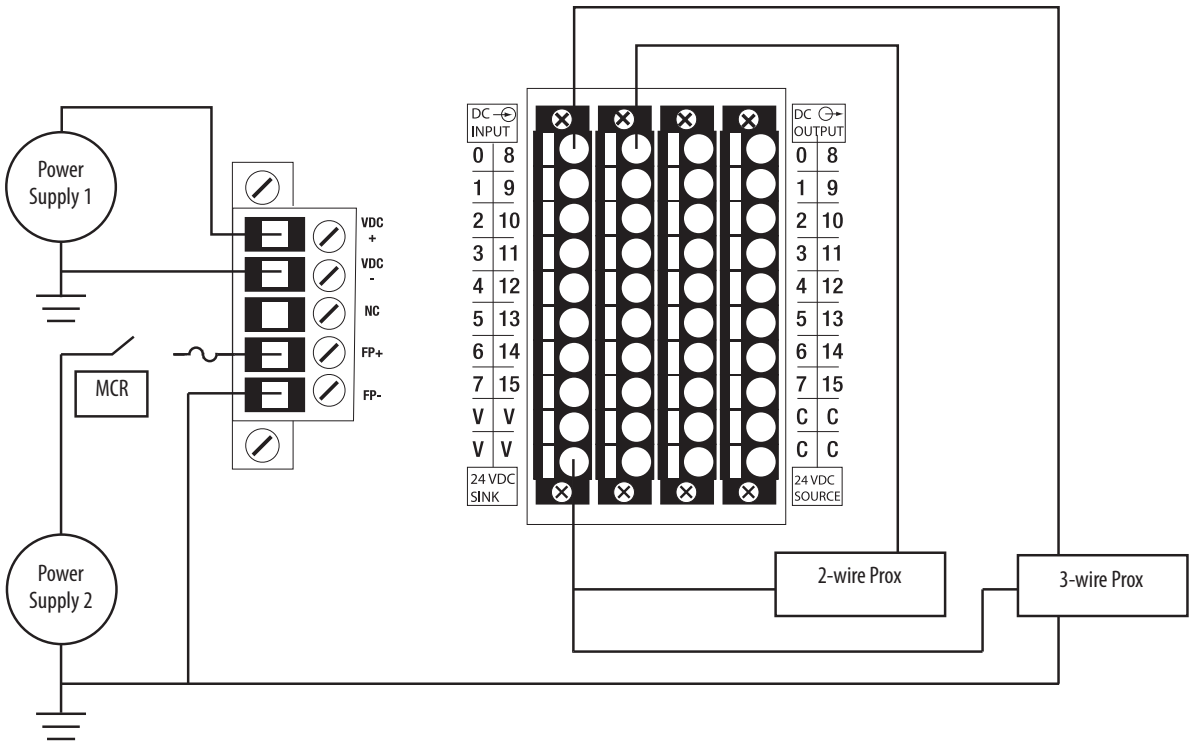

Figure 21 - CompactLogix 5370 L1 Controllers with Input Devices Powered by a V Terminal on Embedded I/O Module (Series B)

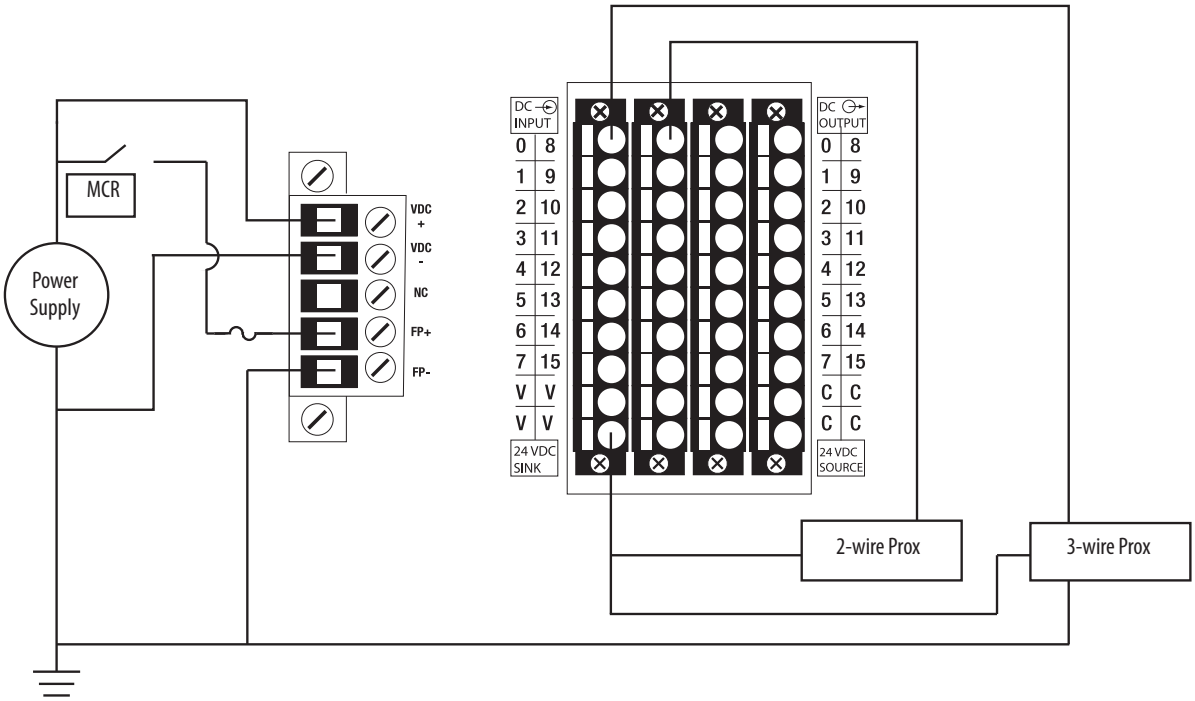

Embedded Output Points

The embedded output points on the CompactLogix 5370 L1 controllers support 2-wire systems. The embedded power supply in the controller powers the embedded output points over the POINTBus backplane.

The following graphic shows examples of how to connect 2-wire systems to embedded output points 0...7. The same wiring connections can be used with output points 8...15.

IMPORTANT Do not exceed the per point output current rating or total output module current rating.

Figure 22 - CompactLogix 5370 L1 Controllers Embedded Digital Output Point Wiring Diagram

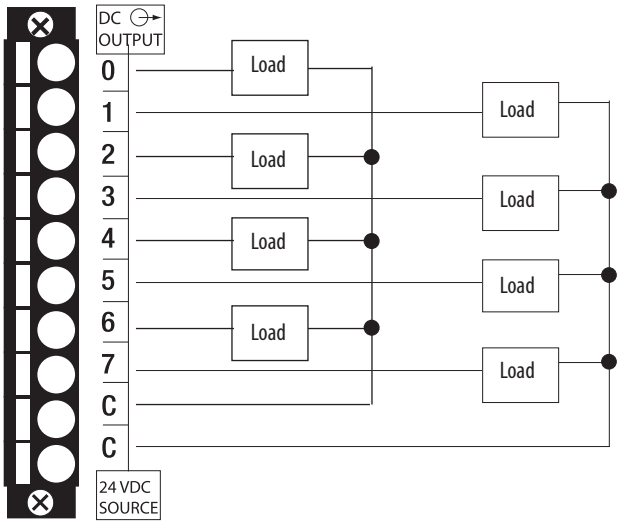

The following graphic shows an example of how to connect 2-wire systems to embedded output points 0...4 and use an external terminal block with a bus connector strip.

IMPORTANT	Do not exceed the per point output current rating or total output module current rating.

Figure 23 - CompactLogix 5370 L1 Controllers Embedded Digital Output Point Wiring Diagram

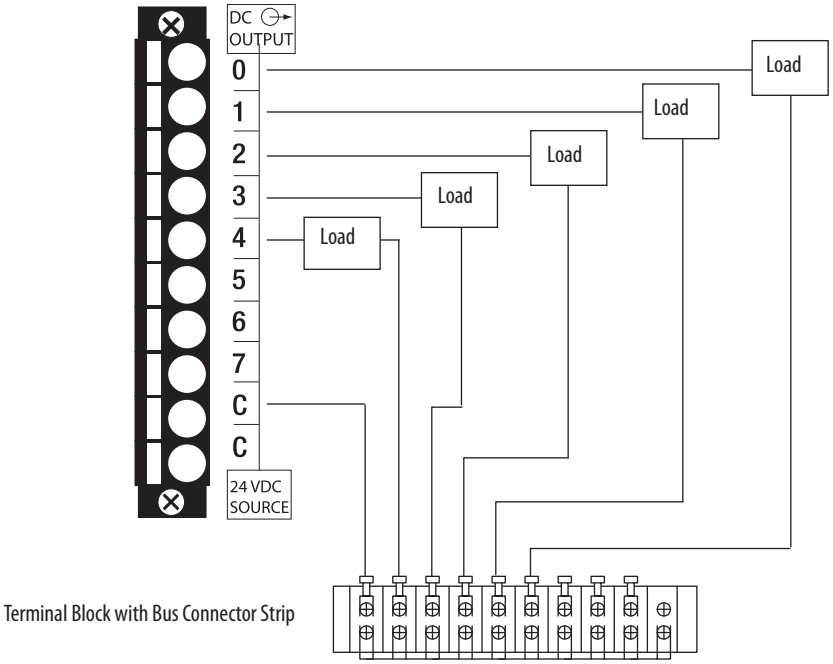

Local Expansion Modules

CompactLogix 5370 L1 controllers support the use of 1734 POINT I/O modules as local expansion modules along the POINTBus backplane.

IMPORTANT For a full description of how to use 1734 POINT I/O modules, see the POINT I/O Digital and Analog Modules and POINTBlock I/O Modules, publication 1734-UM001.

Consider the following when using local expansion modules:

- The controllers support this many local expansion modules.

Table 8 - Maximum 1734 POINT I/O Modules Available as Local Expansion Modules

Cat. No.	Local 1734 POINT I/O Modules Supported, max
1769-L16ER-BB1B	6
1769-L18ER-BB1B	8
1769-L18ERM-BB1B	

- You can use up to the maximum number of 1734 POINT I/O modules with the CompactLogix 5370 L1 controllers that are listed in Table 8, as long as the total current drawn by the embedded I/O and local expansion modules does not exceed the available POINTBus backplane current of 1 A and field power current of 3 A.

IMPORTANT Do not put more than three of the 1734-IT2I or 1734-IR2 modules on the POINT I/O bus that draws power from the same power source. This includes power sources such as from communication adapters or the 1734-EPAC or 1734-EP24DC expansion power supply modules. The inrush current will exceed the current limit of the DC to DC converter in the power source.

Based on the configuration of your application, you can use one of the following devices to make more POINTBus backplane current or field power current available:

– **1734-EP24DC POINT I/O Expansion Power Supply** - An expansion power supply is installed between embedded I/O modules and local expansion modules or between local expansion modules.

  The expansion power supply breaks the available POINTBus backplane current between the modules to its left and right. With the expansion power supply installed, the modules to its left can draw up to 1 A of POINTBus backplane current and the modules to its right can draw as much current as is provided by the expansion power supply.

  Additionally, the expansion power supply breaks the available field power current between the modules to its left and right. With the expansion power supply installed, the modules to its left can draw up to

3 A of field power current and the modules to its right can draw as much field power current as allowed by the expansion power supply.

For example, if you need six 1734-IR2 modules as local expansion modules for a 1769-L18ER-BB1B controller application, you must include the 1734-EP24DC expansion power supply in the local expansion-module installation.

For more information on the 1734-EP24DC expansion power supply, see the POINT I/O 24V DC Expansion Power Supply Installation Instructions, publication 1734-IN058.

– **1734-FPD POINT I/O Field Power Distributor Module** - A field power distributor module can also be installed between embedded I/O modules and local expansion modules or between local expansion modules.

  The field power distributor module breaks the available field power current between the modules to its left and right. With the field power distributor module installed, the modules to its left can draw up to 3 A of field power current, and the modules to its right can draw as much field power current as allowed by the field power distributor.

  For more information on the 1734-FPD POINT I/O Field Power Distributor module, see the POINT I/O Field Power Distributor Module Installation Instructions, publication 1734-IN059.

IMPORTANT	Remember, the field power distributor module changes only the level of field power current available in the system. It does not affect the level of POINTBus backplane current available.

- You must connect an external 24V DC power source to the FP+ and FP- terminals on the removable connector on the controller to provide power to input and output devices that are connected to the local expansion modules.

  – Series A controllers require an extra external 24V DC power source for the FP+ and FP- terminal connections. For more information on how to connect an extra external power source for series A L1 controller to the FP+ and FP- terminals, see Appendix C.
  – Series B controllers use the external 24V DC power source that is connected to the VDC+ and VDC- terminals on the controller for the FP+ and FP- terminal connections. Series B controllers can also use an extra external 24V DC power source for the FP+ and FP- terminal connections.

IMPORTANT	Install a user-replaceable fuse with overcurrent protection of 4…6 A in line between the incoming power and the FP+ terminal.

The field-side power requirement of the local exapansion modules of the controller is 24V DC nominally with an input range of 10...28.8V DC.

For more information on how to connect a power source to the FP+ and FP- terminals, see page 152.

- We **recommend** that you make sure all 1734 POINT I/O modules that you intend as local expansion modules are upgraded to the most current firmware revision before installing them in a CompactLogix 5370 L1 control system.

- The available RPI range of each local expansion module is 1.0…750.0 ms and can be changed by 0.5 ms increments. The default setting is module-dependent.

  You can configure RPI values for each local expansion module in your control system. However, the complete I/O configuration has an impact on the rate at which data is transmitted in a CompactLogix 5370 L1 control system. For more information, see Estimate Requested Packet Interval on page 172.

- Before installing a 1734 POINT I/O module into a CompactLogix 5370 L1 control system, make sure the I/O module is set to Autobaud. 1734 POINT I/O modules are set to Autobaud by default.

  If you must return a 1734 POINT I/O module to Autobaud, see the POINT I/O Digital and Analog Modules and POINTBlock I/O Modules, publication 1734-UM001.

- When possible, use specialty 1734 POINT I/O modules to meet unique application requirements.

- Make sure that there are no empty slots between the controller and local expansion modules or between local expansion modules.

- The Expansion I/O parameter in the project of the controller must match the number of local expansion modules that are installed in the system for the controller to establish connections to the local expansion modules.

- You must use a 1734-232ASC, firmware revision 4.002 or later, to access an RS-232 network in your CompactLogix 5370 L1 controller application.

IMPORTANT	Field power is required for the 1734-232ASC module. The module cannot receive adequate power without the application of field power.

Distributed I/O Modules over an EtherNet/IP Network

You can include distributed I/O modules over an EtherNet/IP network in your CompactLogix 5370 L1 control system.

Consider the following when using distributed I/O modules over an EtherNet/IP network:

- Each remote EtherNet/IP adapter included in the system must be counted toward the maximum number of EtherNet/IP nodes of the controller.

  For more information on maximum number of EtherNet/IP nodes, see Nodes on an EtherNet/IP Network on page 130.

- The configurable RPI settings vary depending on which distributed I/O modules are used in the system.

- To add distributed I/O modules to your CompactLogix 5370 L1 control system, see Configure Distributed I/O Modules on an EtherNet/IP Network on page 181.

The following graphic shows a CompactLogix 5370 L1 control system that uses all three I/O module options.

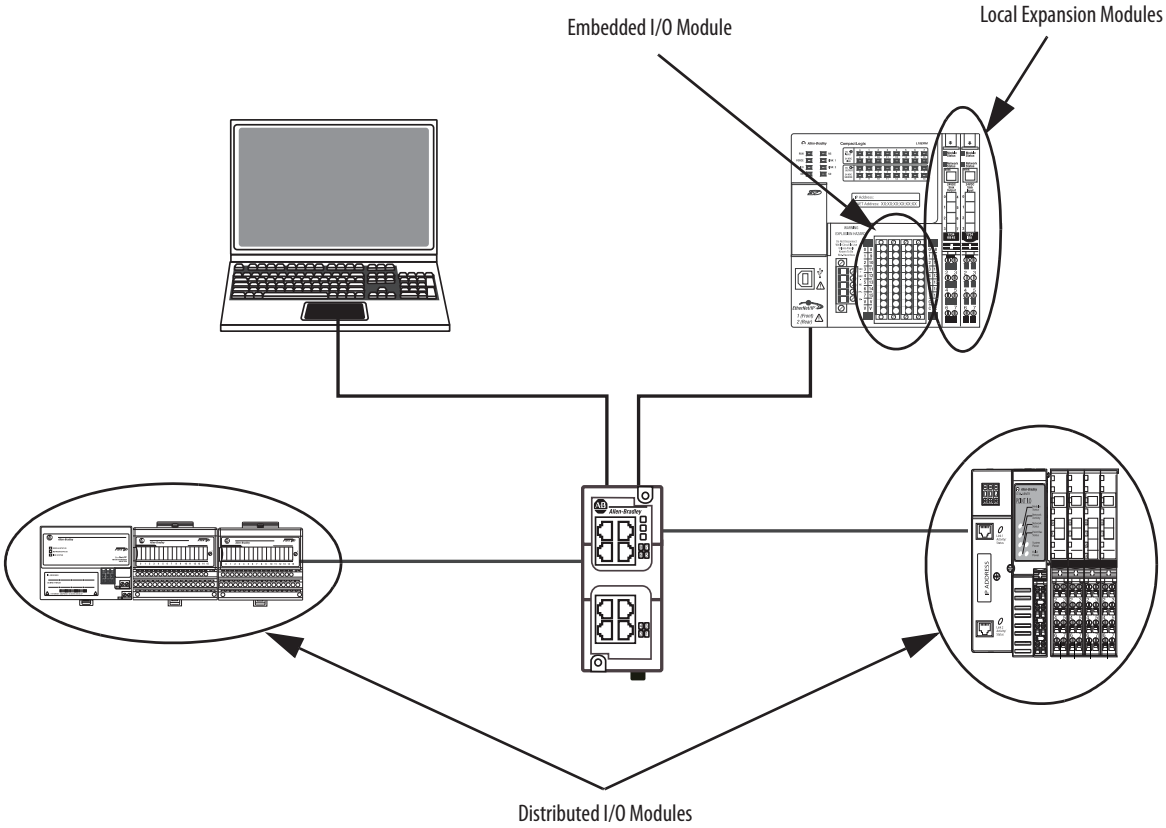

Validate I/O Layout

You must validate the layout of 1734 POINT I/O modules in your CompactLogix 5370 L1 control system. Consider these points when validating I/O layout placement:

- Set the Number of Local Expansion Modules
- Empty Slots and Removal and Insertion Under Power Situations
- Estimate Requested Packet Interval
- Module Faults Related to RPI Estimates
- Physical Placement of I/O Modules

Set the Number of Local Expansion Modules

You must specify the number of local expansion modules to be used in a CompactLogix 5370 L1 control system when creating project, as shown in the following graphic, or when the number of local expansion modules is changed.

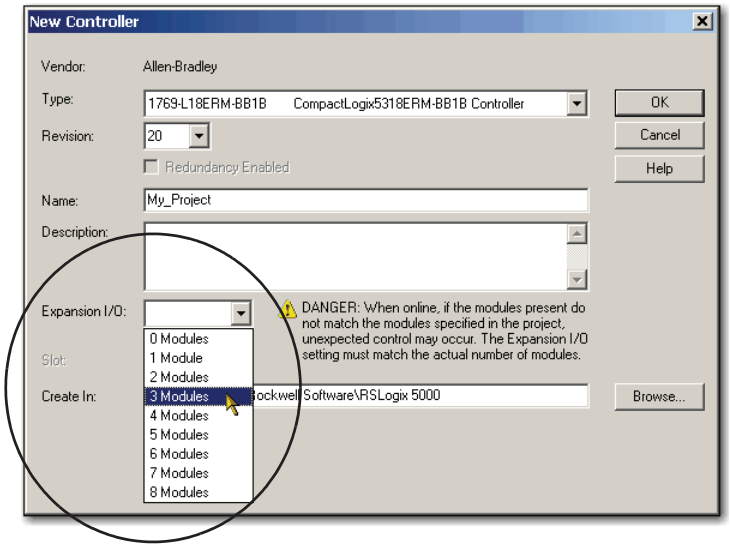

Each time the controller is powered up, it compares the number of local expansion modules present on the POINTBus backplane to the Expansion I/O value. The controller does not allow any I/O connections until the number of local expansion modules present equals the Expansion I/O value.

Empty Slots and Removal and Insertion Under Power Situations

The POINT I/O system cannot detect an empty terminal base. For this reason, there are numerous situations in which you can potentially configure a system that is unusable or one that exercises unintended control.

Follow these rules for I/O system configuration and RIUP of I/O modules.

WARNING: If you insert or remove the module while backplane power is on, an electrical arc can occur. This could cause an explosion in hazardous location installations.

Be sure that power is removed or the area is nonhazardous before proceeding.

IMPORTANT 1734 POINT I/O modules support RIUP in CompactLogix 5370 L1 control systems.

- A correct I/O system does not have any empty terminal bases. If necessary, you can use a 1734-ARM POINT I/O Address Reserve module to replace a 1734 POINT I/O module in a CompactLogix 5370 control system.
- After you cycle power, the controller only enables I/O connections if the number of local expansion modules present on POINTBus matches the value that is used for the Expansion I/O parameter in the project.
- If a 1734 POINT I/O module is removed under power, the operation of the other I/O modules is not disrupted.
- When you remove an I/O module that has an active connection from the controller, the controller I/O status indicator flashes green to indicate the condition.

IMPORTANT If you enabled the 'Major Fault On Controller If Connection Fails While in Run Mode' parameter when configuring the module in the Studio 5000 environment project, removal of the module causes the controller to transition to a major fault condition.

- If multiple contiguous modules are removed under power, connections to all modules in the contiguous missing module set are disallowed until all modules are replaced. The controller cannot detect an empty base. Therefore, it does not know the physical positioning of the modules until all missing modules are replaced.
- If a module that separates two sets of contiguous missing modules is removed, the two sets merge into one set. All modules must be replaced before connections are permitted to any module in the set.

- If modules of different types are removed and returned to the wrong locations, attempts to connect to these modules fail during verification of Electronic Keying.

IMPORTANT If Electronic Keying is set to Disable Keying, no verification of electronic keying occurs and unintended control can occur.

- If modules of the same type are removed and returned to the wrong locations, they accept connections from the controller and reconfigure with the correct data once they pass their electronic keying check.

Estimate Requested Packet Interval

The requested packet interval (RPI) defines the frequency at which the controller sends data to and receives data from I/O modules. You set an RPI rate for each I/O module in your system.

The CompactLogix 5370 L1 controllers attempt to scan an I/O module at the configured RPI rate. For individual I/O modules, a Module RPI Overlap minor fault occurs if there are enough I/O modules with RPI rates set too fast that they cannot all be serviced in the allotted interval.

The configuration parameters for a system determine the impact on actual RPI rates. These configuration factors can affect the effective scan frequency for any individual module:

- Other 1734 POINT I/O module RPI rate settings
- Number of other 1734 POINT I/O modules in the system
- Types of other 1734 POINT I/O modules in the system
- Application user task priorities

In general, follow these guidelines when setting the RPI rates in a CompactLogix 5370 L1 control system:

- For **digital** I/O modules:
  - 1...2 modules can be scanned in 2 ms.
  - 3...4 modules can be scanned in 4 ms.
  - 5...8 modules can be scanned in 8 ms.

IMPORTANT When considering digital I/O modules, remember that they can be the embedded I/O module on the controller or 1734 POINT I/O modules that are used as Local Expansion Modules. Therefore, the consideration for using two modules can be the embedded I/O module and a 1734 POINT I/O module or two 1734 POINT I/O modules.

- For **specialty and analog** I/O modules (except 1734-485ASC modules):
  - One module can be scanned at 20 ms.
  - For each additional module, add 20 ms.

  For example, if a CompactLogix 5370 L1 control system uses two analog modules, the module can be scanned in 40 ms.

- For **1734-485ASC** modules, the total data size for all ASC modules determines the RPI rates:
  - For total data size less than 20 bytes, each module can be scanned in 20 ms.
  - For data size greater than 20 bytes, use the size value as the RPI.

  For example, if the total data size is 40 bytes, each ASC module can be scanned in 40 ms.

You are not required to set individual RPI values of 1734 POINT I/O modules to the values listed previously. For example, if your application scans one or two modules, you do not have to use RPI rates of 2 ms. Remember, though, that higher RPI rates result in less frequent data scans.

The RPI shows how quickly modules can be scanned, not how quickly an application can use the data. The RPI is asynchronous to the program scan. Other factors, such as program execution duration, affect I/O throughput.

Module Faults Related to RPI Estimates

When following the guidelines described on page 172, most CompactLogix 5370 L1 control systems operate as expected.

Some systems that follow the guidelines can experience minor faults that are described in the following table.

Name	Fault Information	Condition In Which Fault Occurs
Module RPI Overlap	(Type 03) I/O fault (Code 94) Module RPI overlap detected Module Slot = *x*, where *x* is the slot number of the I/O module in the I/O Configuration section	This fault is logged when the current RPI update of an I/O module overlaps with its previous RPI update. The Minor Faults tab in the Controller Properties dialog box indicates which module the RPI overlaps. If multiple I/O modules experience the fault, the application indicates that the fault occurred on the first such I/O module. Typically, it is an I/O module with a lower RPI rate and/or an I/O module with large input/output data sizes. For example, the 1734-232ASC and 1734-485ASC modules use large input/output data sizes. Once the fault is cleared from the first I/O module, the application indicates the next module that experiences the fault. This pattern continues until the fault is cleared from all affected I/O modules. To avoid this fault, set the RPI rate of the I/O modules to a higher numerical value.

Calculate System Power Consumption

An embedded 24V DC nominal, non-isolated power supply with an input range of 10...28.8V DC powers the CompactLogix 5370 L1 control system.

The embedded power supply provides 1 A @ 5V DC to the POINTBus backplane to power all system components, including local expansion modules, that is 1734 POINT I/O modules, in most system configurations.

In some circumstances, you can configure a system that requires more current than the embedded power supply of the system provides. This type of configuration results from using a combination of local expansion modules that, when combined with current consumption of the rest of the system, exceeds 1 A @ 5V DC.

In this case, you can take any of the following actions to make sure that your system configuration has enough power:

- Insert a 1734-EP24DC POINT I/O expansion power supply between local expansion modules to increase the POINTBus backplane power.
- Insert a 1734-FPD POINT I/O Field Potential Distribution module between local expansion modules to renew field power or change the field power from DC to AC, that is, separate DC I/O modules from AC I/O modules on the same POINTBus.

IMPORTANT	The 1734-FPD POINT I/O Field Power Distributor is required if the devices connected to the local expansion modules consume more than 3 A.

Physical Placement of I/O Modules

Before you physically install the I/O modules, you must assemble, mount, and ground the system as described in Chapter 1, Install the CompactLogix 5370 L1 Controller on page 15.

Use the Event Task

The CompactLogix 5370 L1 controllers support the use of an Event task with their embedded input points. You can configure embedded input point terminals to trigger an Event task if a change of state (COS) occurs.

IMPORTANT When using the Event task with the CompactLogix 5370 L1 controllers, consider these points:

- You can use the Event task only with Logix Designer application, version 21.00.00 and later.
- You can use the Event task only with the embedded input points of the controller. You cannot use the Event task with input points in the local expansion modules, for example, a 1734-IB4 module.
- You can use the Event task only if the input point has an input data state change.
- An event is recognized only when it maintains the same state for at least the duration of the input filter time specified.
- Configure the Event task at a rate that stops task overlap conditions.
- Configure the Event task at a rate that is likely to succeed.

  A 2 ms signal width is the minimum pulse width that can be used at which the Event task succeeds.

You can configure multiple embedded input points to trigger an Event task. However, we recommend that you enable COS for only one point. If you enable COS for multiple points, a task overlap of the Event task can occur.

You can configure an Event task to trigger if one of these events occurs:

- An event occurs on one point on an input module.
- A trigger event does not occur in a time interval.

You configure whether the task updates output modules at the end of the task. After the task executes, it does not execute again until the event occurs again. Each Event task requires a trigger.

The following table describes the triggers for an Event task available in a CompactLogix 5370 L1 control system.

Trigger	Description
Input Data State Change	The input point triggers the Event task that is based on the change of state (COS) configuration for the point. The COS configuration is set on the Module Definition dialog box.
Consumed Tag	Only one consumed tag can trigger an Event task. Use an Immediate Output (IOT) instruction in the producing controller to signal the production of new data.
Axis Registration 1 or 2	A registration input triggers the Event task.
Axis Watch	A watch position triggers the Event task.
Motion Group Execution	The coarse update period for the motion group triggers the execution of the motion planner and the Event task. Because the motion planner interrupts all other tasks, it executes first.
EVENT Instruction	Multiple EVENT instructions can trigger the same task.

For more information on Event tasks, see the following publications:

- Logix5000 Controllers Common Procedures Programming Manual, publication 1756-PM001
- Using Event Tasks with Logix5000 Controllers, publication LOGIX-WP003

Complete the following steps to configure the Event task.

1. Open the project.
2. Right-click Embedded Discrete_IO and choose Properties.

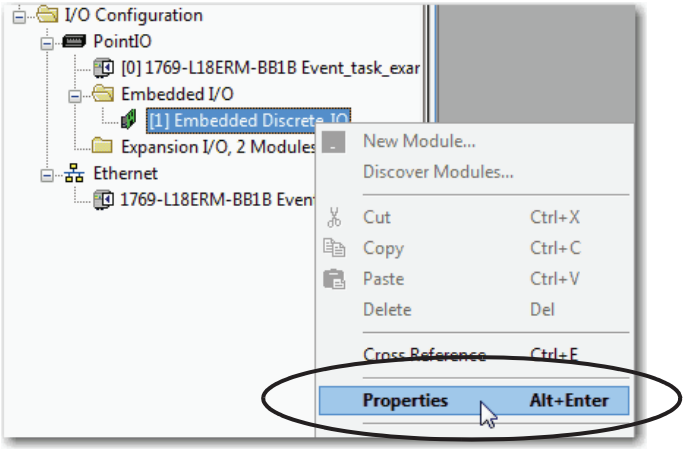

3. On the Module Properties dialog box, complete the following steps.
   a. Click the Input Configuration tab.
   b. Enable COS for the digital input points on which a state change, that is, Off to On or On to Off, triggers the Event task.
   c. Set the desired input filter time for each COS-enabled input point.

IMPORTANT An event is recognized only when it maintains the same state for at least the duration of the input filter time specified.

   d. Click OK.

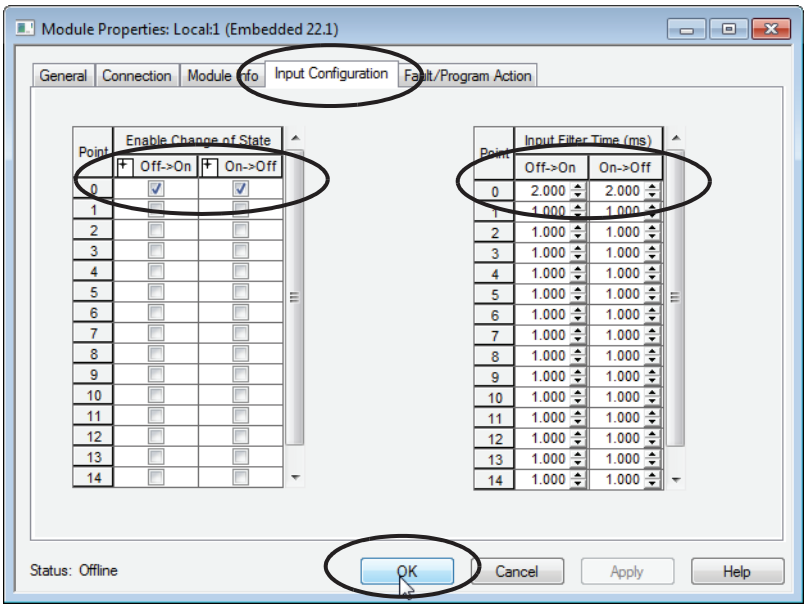

4. Right-click Tasks and choose New Task.

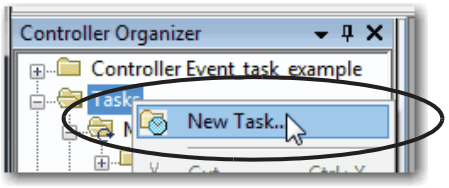

5. On the New Task dialog box, complete the following steps.
   a. Name the task.
   b. Change the task type to Event.
   c. Choose the trigger.
   d. Select the tag.
   e. If desired, set a time so the Event task executes if no event occurs with the value.

      On the following example dialog box, the time is 10 ms. If no event occurs for 10 ms, the Event task executes.
   f. Set the task priority.

      The default Event task priority level is 10. For more information about Event tasks, see Using Event Tasks with Logix5000 Controllers white paper, LOGIX-WP003.
   g. Make more desired configuration changes.
   h. Click OK.

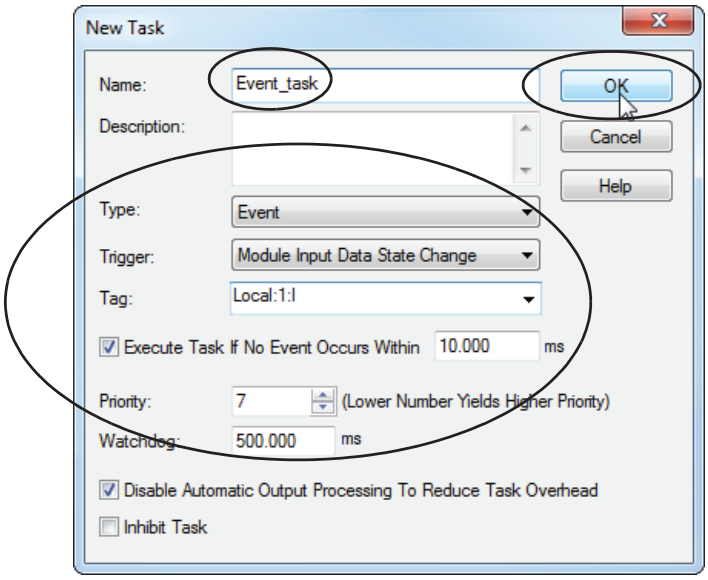

The new Event task appears in the Controller Organizer.

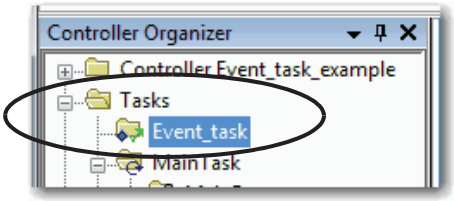

Configure I/O

Complete these steps to add a 1734 POINT I/O module to your CompactLogix 5370 L1 control system.

1. Right-click PointIO and choose New Module.

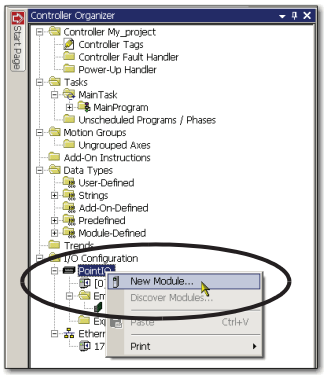

You can also right-click Expansion I/O.

2. Select the desired I/O module and click Create.

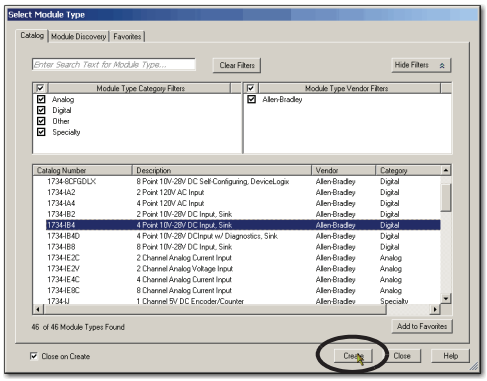

The New Module dialog box appears.

3. Configure the new I/O module as necessary and click OK.

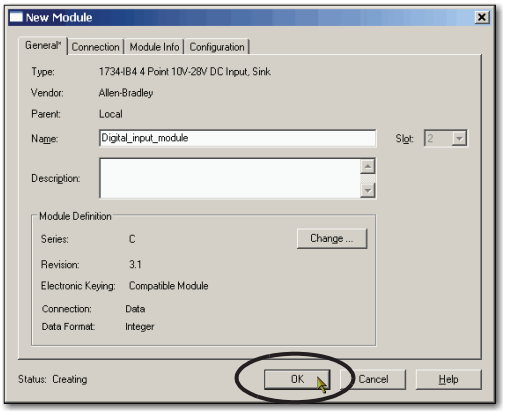

Common Configuration Parameters

While the configuration options vary from module to module, there are some common options you typically configure when using 1734 POINT I/O modules in a CompactLogix 5370 L1 control system, as described in Table 9.

Table 9 - Common Configuration Parameters

Configuration Option	Description
Requested packet interval (RPI)	The RPI specifies the interval at which data is transmitted or received over a connection. For POINTBus backplane local expansion modules, data is transmitted to the controller at the RPI. When scanned on the local bus or over an EtherNet/IP network, I/O modules are scanned at the RPI specified in the module configuration. Typically, you configure an RPI in milliseconds (ms). • For local expansion modules, the range is 1.0…750 ms and the RPI must be configured in 0.5 ms increments. That is, you cannot set the RPI to a value of 2.3 ms. It must be 2.0 or 2.5. • For remote I/O modules over an EtherNet/IP network, the range is 2.0…750 ms and the RPI must be configured in 1.0 ms increments. That is, you cannot set the RPI to a value of 2.3 ms. It must be 2.0 or 3.0.
Module definition	Set of configuration parameters that affect data transmission between the controller and the I/O module. The parameters include the following: • Series - Hardware series of the module. • Revision - Major and minor firmware revision levels that are used on the module. • Electronic Keying - See LOGIX-AT001 for Electronic Keying information. • Connection - Type of connection between the controller that writes the configuration and the I/O module, such as Output. • Data format - Type of data that is transferred between the controller and I/O module and what tags are generated when the configuration is complete.
Major Fault on Controller If Connection Fails While in Run Mode	This option determines how the controller is affected if the connection to an I/O module fails in Run mode or if the controller is unable to establish a connection to the module. You can configure the project so that a connection failure causes a major fault on the controller or not. The default setting is for the option to be disabled. For example, if this option is enabled and an I/O module is removed while in Run mode, a major fault occurs on the controller. The default setting for the embedded I/O module is that this option is enabled. The default setting for local expansion modules is that this option is disabled.

I/O Connections

A CompactLogix 5370 L1 control system uses connections to transmit I/O data. Table 10 describes the connection types.

IMPORTANT You can only use direct connections with the local expansion modules in a CompactLogix 5370 L1 control system.

Table 10 - I/O Module Connections

Connection	Description
Direct	A direct connection is a real-time, data-transfer link between the controller and an I/O module. The controller maintains and monitors the connection. Any break in the connection, such as a module fault, causes the controller to set fault status bits in the data area that is associated with the module. Typically, analog I/O modules, diagnostic I/O modules, and specialty modules require direct connections.
Rack-optimized	Rack-optimized connections are not available with local expansion modules used in CompactLogix 5370 L1 control systems. For digital I/O modules, you can select rack-optimized connections. This option is used with distributed I/O modules and the Rack Optimization connection selection is made when configuring the remote adapter. For example, if you want to use a rack-optimized connection with digital I/O modules in a remote 1734 POINT I/O system, you configure the 1734-AENT(R) module to use a connection type of Rack Optimization. A rack-optimized connection consolidates connection usage between the controller and all digital I/O modules in a remote chassis or on one DIN rail. Rather than having individual, direct connections for each I/O module, there is one connection for the entire rack (or DIN rail).

Configure Distributed I/O Modules on an EtherNet/IP Network

Your CompactLogix 5370 L1 control system can use distributed I/O modules on an EtherNet/IP network.

IMPORTANT When adding distributed I/O modules, remember to count the remote Ethernet adapter to remain within the maximum number of EtherNet/IP network nodes limitation for your controller.

The distributed I/O modules that are connected to the controller via the remote Ethernet adapter are not counted toward the maximum Ethernet node limit for the controller.

For example, a 1769-L16ER-BB1B controller supports up to four Ethernet nodes. You can add up to four remote Ethernet adapters to the I/O Configuration section because each remote adapter counts against the node count. However, you can add as many remote I/O modules to the chassis of the adapter as necessary. Remote I/O modules do not count against the node count.

For more information on node limitations, see Nodes on an EtherNet/IP Network on page 130.

Complete these steps to configure distributed I/O modules on an EtherNet/IP network.

1. Right-click Ethernet and choose New Module.

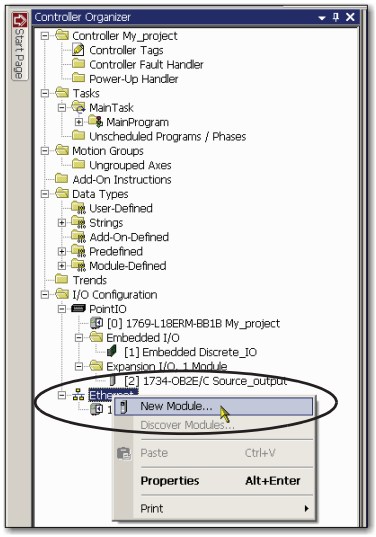

2. Select the desired Ethernet adapter and click Create.

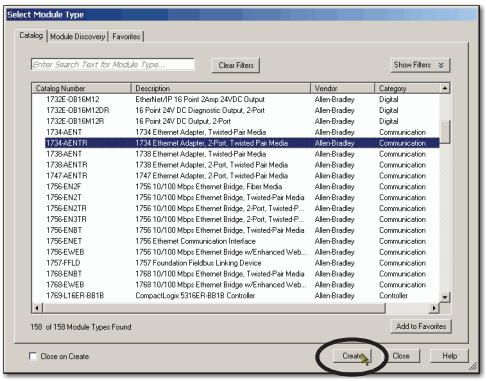

The New Module dialog box appears.

3. Configure the new Ethernet adapter as necessary and click OK.

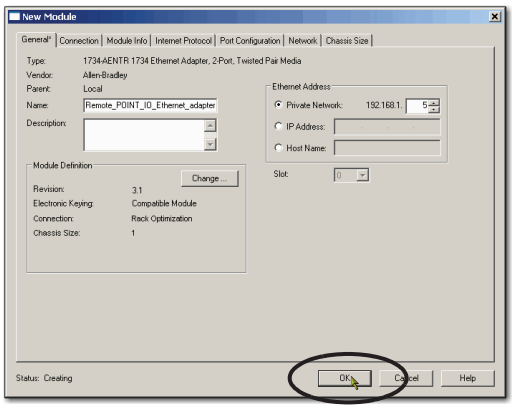

4. Right-click the new adapter and choose New Module.

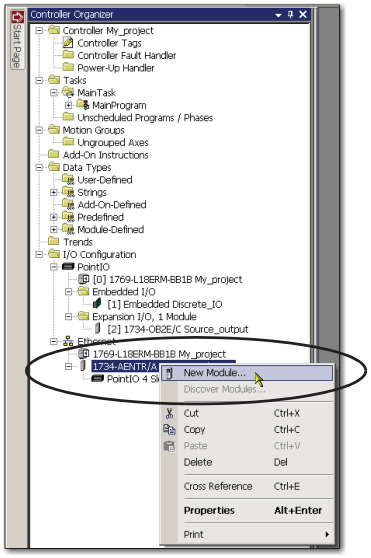

5. Select the desired I/O module and click Create.

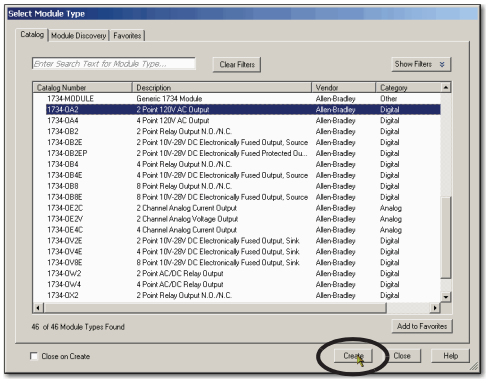

The New Module dialog box appears.

6. Configure the new I/O module as necessary and click OK.

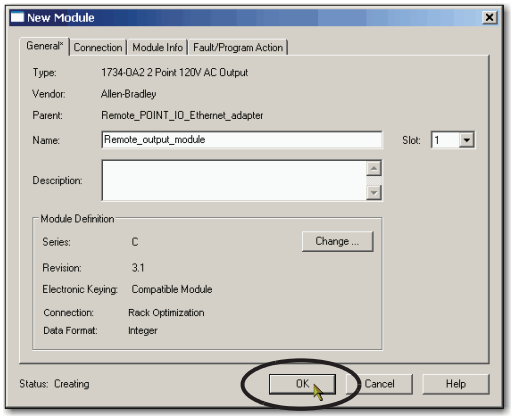

7. Repeat these steps to add all desired distributed I/O modules to the project.

The following graphic is an example of a 1769-L18ERM-BB1B control system that uses distributed I/O modules over an EtherNet/IP network.

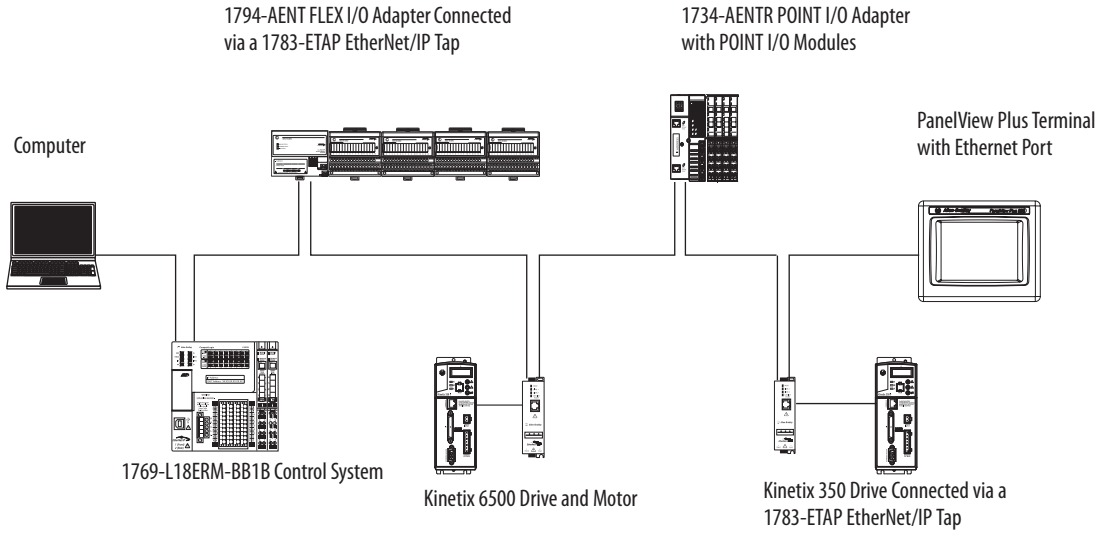

Monitor I/O Modules

With CompactLogix 5370 L1 controllers, you can use the following options to monitor I/O modules:

- Quick View Pane below the Controller Organizer
- Connection tab in the Module Properties dialog box
- Programming logic to monitor fault data so you can act

When a fault occurs on an I/O module, a yellow triangle on the module listing in the Controller Organizer alerts you to the fault.

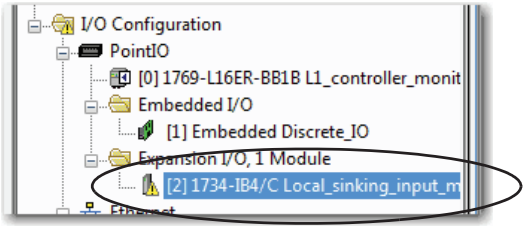

The following graphic shows the **Quick View Pane**, which indicates the type of fault.

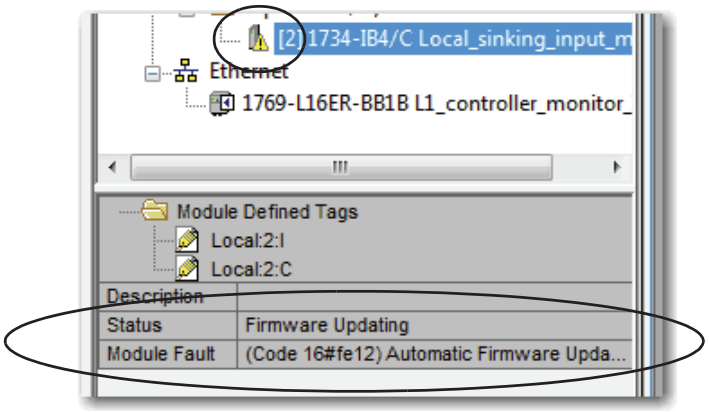

To see the fault description on the **Connection tab** in Module Properties dialog box, complete these steps.

1. In the I/O Configuration, right-click the faulted I/O module and choose Properties.

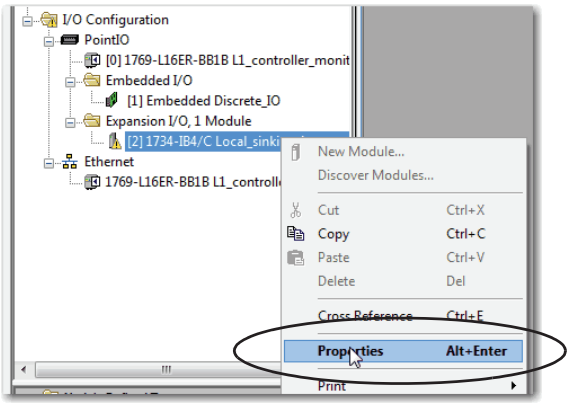

2. Click the Connection tab and use the fault description, in the Module Fault section, to diagnose the issue.

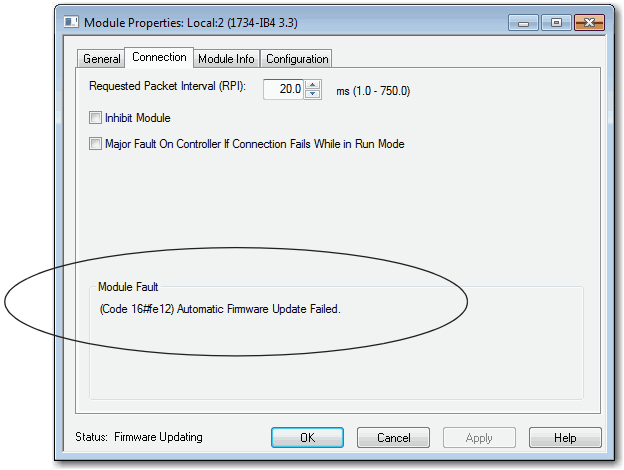

3. Click OK to close the dialog box and remedy the issue.

Bus Off Detection and Recovery

When the POINTBus backplane experiences a bus off condition, the CompactLogix 5370 L1 controller indicates this condition via a BUS OFF minor fault (Type 03, Code 01). When this fault occurs, the connections between the controller and I/O modules are broken.

Complete these steps to identify the source of the BUS OFF minor fault.

1. Make sure the number of local expansion modules in the project matches the number of modules that are physically installed in the system.
2. Make sure that all mounting bases are locked and I/O modules are securely installed on mounting bases.
3. Make sure all 1734 POINT I/O modules are configured to use the Autobaud rate.

IMPORTANT You cannot change a 1734 POINT I/O module's Autobaud setting when the module is installed in a CompactLogix 5370 L1 control system.

If you must return a 1734 POINT I/O module to Autobaud, see the POINT I/O Digital and Analog Modules and POINTBlock I/O Modules, publication 1734-UM001.

If these steps do not remedy the fault condition, contact Rockwell Automation technical support.

Notes:

Use I/O Modules with CompactLogix 5370 L2 Controllers

This chapter explains how to use I/O modules in a CompactLogix 5370 L2 control system.

Topic	Page
Select I/O Modules	189
Embedded Analog I/O Modules Data Arrays	209
Validate I/O Layout	223
Configure Local I/O Modules	229
Configure Distributed I/O Modules on an EtherNet/IP Network	232
Configure Distributed I/O Modules on an EtherNet/IP Network	232
Configure Distributed I/O Modules on a DeviceNet Network	236
Monitor I/O Modules	238

Select I/O Modules

CompactLogix 5370 L2 control systems offer these I/O module options:

- Embedded I/O Modules
- Local Expansion Modules - Optional
- Distributed I/O Modules over an EtherNet/IP Network

Embedded I/O Modules

CompactLogix 5370 L2 controllers provide embedded I/O modules. The catalog number determines the number and type of points. The following table describes which embedded I/O modules CompactLogix 5370 L2 controllers support.

Cat. No.	SInking/ Sourcing 24V DC Digital Input Points	Sinking 24V DC Digital Output Points	High-speed Counters	High-speed Counter Output Points	Universal Analog Input Points	Analog Output Points
1769-L24ER-QB1B	16	16	-	-	-	-
1769-L24ER-QBFC1B			4	4	4	2
1769-L27ERM-QBFC1B						

IMPORTANT Remember the following when using the embedded I/O modules on CompactLogix 5370 L2 controllers:

- 1769-L24ER-QB1B controller - The digital input points and digital output points are on one embedded I/O module. Therefore, the 1769-L24ER-QB1B controller is considered to have one embedded I/O module.
- 1769-L24ER-QBFC1B and 1769-L27ERM-QBFC1B controllers - The digital input points and digital output points are on one embedded I/O module. The high-speed counter input output points, universal analog input points, and analog output points are on another single embedded I/O module. Therefore, the 1769-L24ER-QBFC1B and 1769-L27ERM-QBFC1B controllers are considered to have two embedded I/O modules.

You configure an RPI rate for the embedded I/O modules to establish time intervals at which data is transmitted between the controller and each embedded I/O point. The' available RPI range of the embedded I/O points is 0.5…750.0 ms and can be changed by 0.5 ms increments. The default setting is 20 ms.

IMPORTANT

- If you attempt to use an RPI value that is not valid, the application automatically rounds the value down to the closest 0.5 ms increment when you apply the change.

  For example, if you set the RPI = 1.75 ms, when you click Apply or OK, the value is rounded down to 1.5 ms and applied.
- The RPI value for an embedded I/O module is intended to establish a time interval at which data is transmitted. However, the configuration of your CompactLogix 5370 L2 control system can affect the actual time interval of data transmission.

  For more information, see Estimate Requested Packet Interval on page 223.

Embedded Digital I/O Points

The embedded digital I/O module on CompactLogix 5370 L2 contains sixteen 24V DC sinking inputs and sixteen 24V DC sourcing outputs. The inputs can be configured to use digital filtering by input group. Filter times can be specified for OFF to ON and ON to OFF.

Group 0 is used to configure inputs 0...7. Group 1 is used to configure inputs 8...15. The default filter time for each group is 8 ms. You can the filter times to 0.0 ms, 0.1 ms, 0.5 ms, 1.0 ms, 2.0 ms, and 4.0 ms, as shown in this graphic.

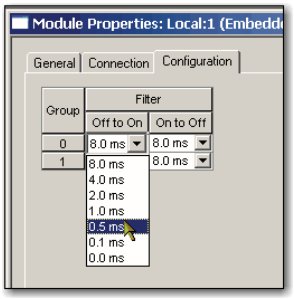

Figure 24 shows the CompactLogix 5370 L2 controllers' embedded digital I/O points.

IMPORTANT Figure 24 shows the embedded digital I/O points on the 1769-L24ER-QB1B controller. The embedded digital I/O points on the 1769-L24ER-QBFC1B and 1769-L27ERM-QBFC1B controllers are organized and wired the same.

Figure 24 - CompactLogix 5370 L2 Controllers Embedded Digital I/O Module Wiring Termination Points

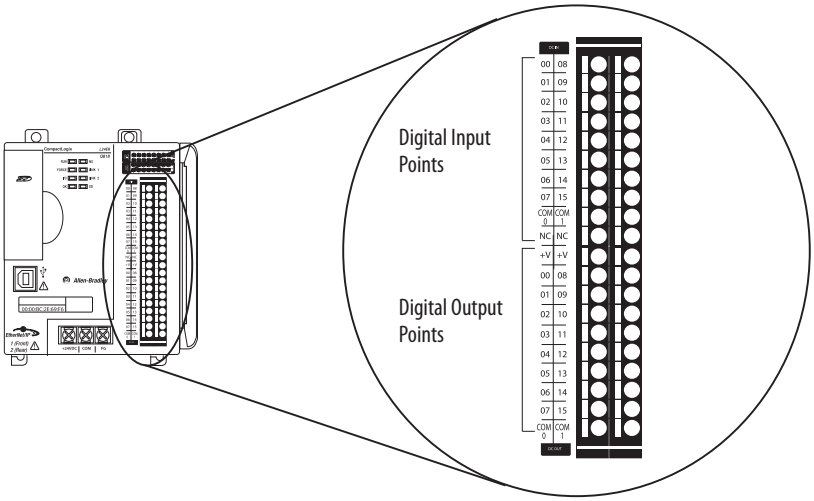

Figure 25 shows an example wiring diagram for the embedded digital input points.

Figure 25 - CompactLogix 5370 L2 Controllers Embedded Digital Input Point Wiring Diagram

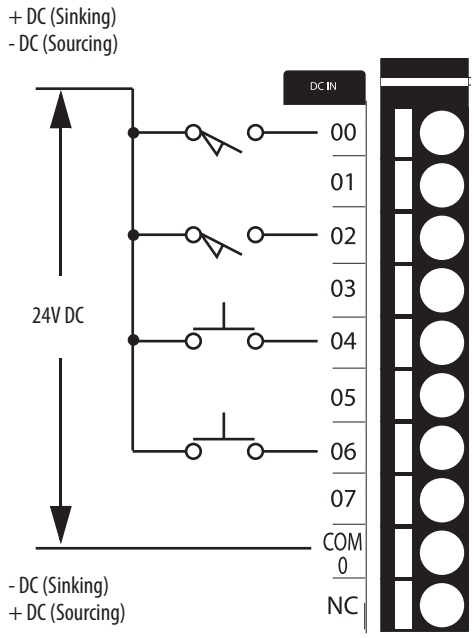

Figure 26 shows an example wiring diagram for the embedded digital output points.

Figure 26 - CompactLogix 5370 L2 Controllers Embedded Digital Output Point Wiring Diagram

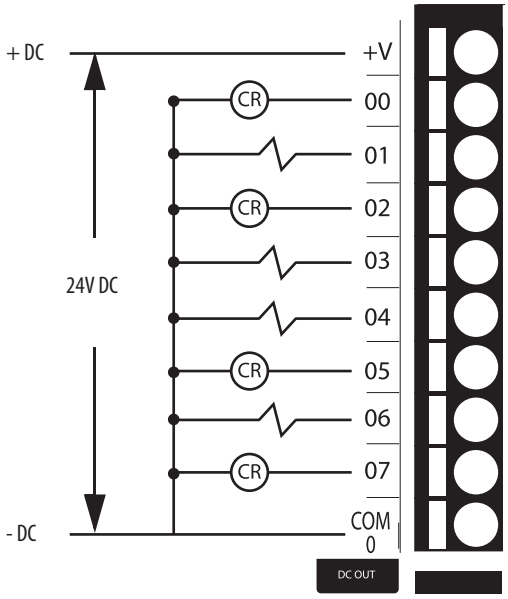

Embedded Analog I/O Points

IMPORTANT The embedded analog I/O points are available on only the 1769-L24ER-QBFC1B and 1769-L27ERM-QBFC1B controllers.

The 1769-L24ER-QBFC1B and 1769-L27ERM-QBFC1B controllers support four embedded universal analog inputs that can function as differential or single-ended inputs and two embedded standard analog outputs that can function as single-ended outputs. The inputs and outputs are considered channels. Each channel configuration offers multiple configuration options.

Table 11 lists the available embedded analog input channel types and ranges for the channel type. The configuration choices are made on the Input Configuration tab of the Module Properties dialog box, as shown in the table.

Table 11 - Input Types

Input Type	Input Ranges	Project Configuration
Voltage	• Type -50…50 mV • Type -100…100 mV • 0…5V • 1…5V • 0…10V • -10V…10V	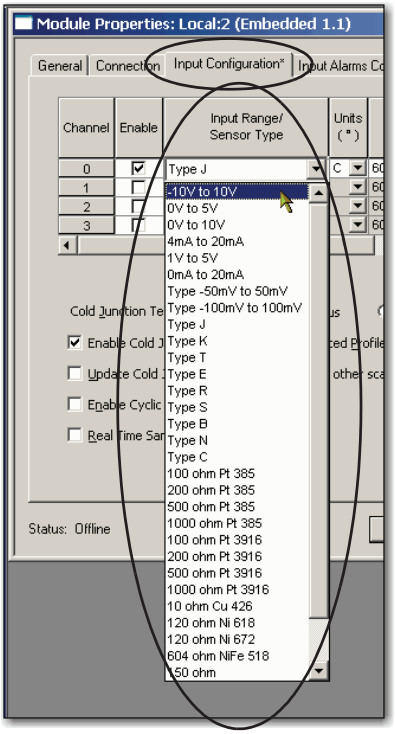
Current	• 0…20 mA • 4…20 mA	
Thermocouple	• J • K at 1370…1372 °C (2498…2501.6 °F) • K at -200…1370 °C (-328…2498 °F) • T • E • S and R at 0…1768 °C (32…3214.4 °F) • S and R at -50…0 °C (-58…32 °F) • B at 300…1820 °C (572…3308 °F) • B at 250…300 °C (482…572 °F) • N • C	
RTD	• 100 Ω Platinum 385 • 200 Ω Platinum 385 • 500 Ω Platinum 385 • 1000 Ω Platinum 385 • 100 Ω Platinum 3916 • 200 Ω Platinum 3916 • 500 Ω Platinum 3916 • 1000 Ω Platinum 3916 • 10 Ω Copper 426 • 120 Ω Nickel 618 • 120 Ω Nickel 672 • 604 Ω Nickel-Iron 518	
Resistance	• 0…150 Ω • 0…500 Ω • 0…1000 Ω • 0…3000 Ω	

Figure 27 shows the embedded analog I/O points and how each termination point is used with different analog input types.

IMPORTANT Figure 27 shows the embedded analog I/O points on the 1769-L27ERM-QBFC1B controller. The embedded analog I/O points on the 1769-L24ER-QBFC1B and 1769-L27ERM-QBFC1B controllers are organized and wired the same.

Figure 27 - 1769-L27ERM-QBFC1B Controller Embedded Analog I/O Wiring Termination Points

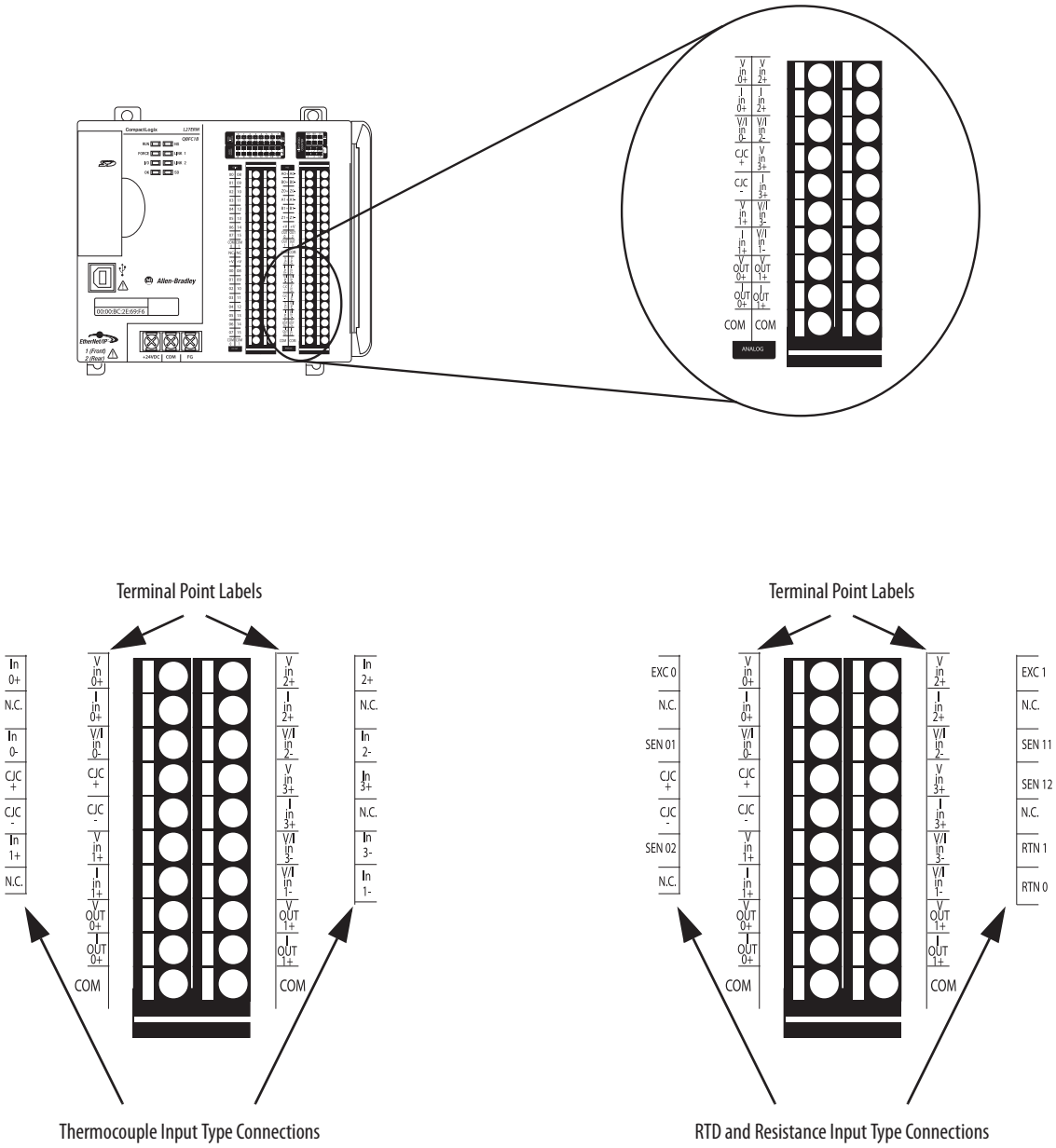

Figure 28 shows an example of ungrounded and grounded thermocouple wiring diagrams on a 1769-L27ERM-QBFC1B controller.

Figure 28 - 1769-L27ERM-QBFC1B Controller Thermocouple Wiring Diagrams

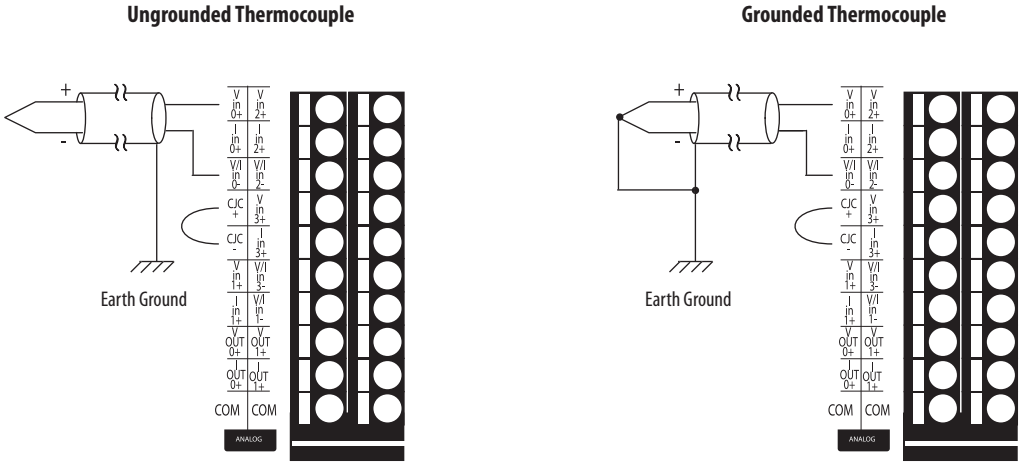

IMPORTANT: You must order Cold Junction Connectors, catalog number 1769-CJC, separately from the CompactLogix 5370 L2 controllers.

Figure 29 shows an example of devices with differential connections wired to the embedded analog inputs on a 1769-L27ERM-QBFC1B controller when it is operating with voltage or current input types.

Figure 29 - 1769-L27ERM-QBFC1B Controller Differential Connections Diagrams

IMPORTANT: For both input types, we recommend that you use Belden #8761or equivalent cable.

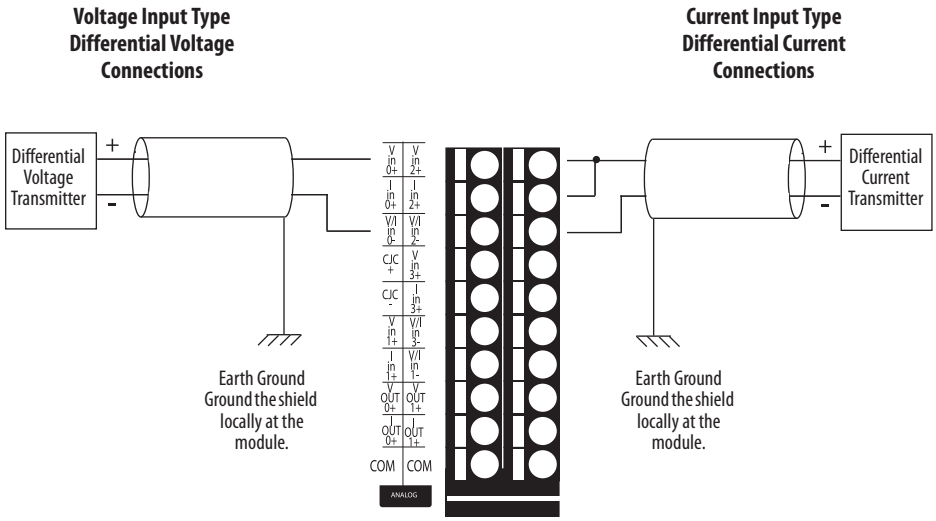

Figure 30 shows an example of devices with single-ended connections wired to the embedded analog inputs on a 1769-L27ERM-QBFC1B controller when it is operating with voltage or current input types.

Figure 30 - 1769-L27ERM-QBFC1B Controller Single-ended Connections Wiring Diagrams

IMPORTANT: For single-ended connections, remember the following:

- For both input types, we recommend that you use Belden #8761or equivalent cable.
- The mV ranges with the Voltage input type do not support single-ended encoder wiring.
- All commons are electrically tied together in the controller.
- If multiple power supplies are used, the commons must have the same reference.

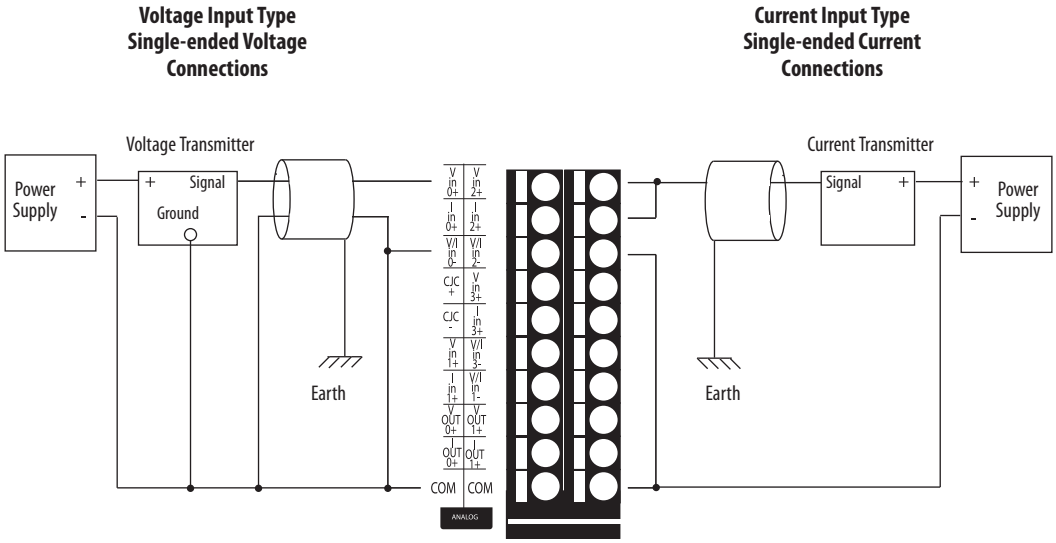

Figure 31 shows an example of 2-wire, 3-wire, and 4-wire RTD/Resistance wiring diagrams on a 1769-L27ERM-QBFC1B controller.

Figure 31 - 1769-L27ERM-QBFC1B RTD/Resistance Wiring Diagrams

2-wire Device Wiring Diagram

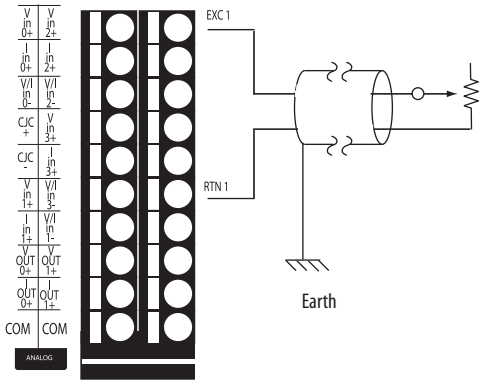

IMPORTANT: For all wiring diagrams, we recommend that you use Belden #83503 or 9533 cable.

3-wire Device Wiring Diagram

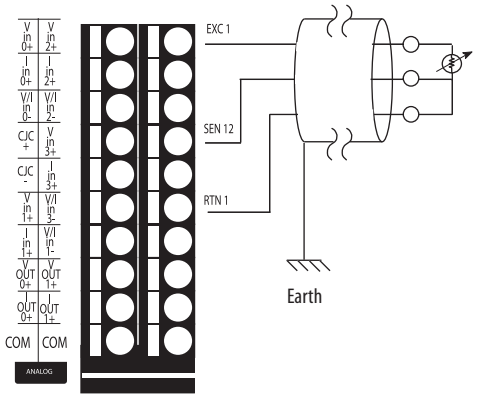

4-wire Device Wiring Diagram

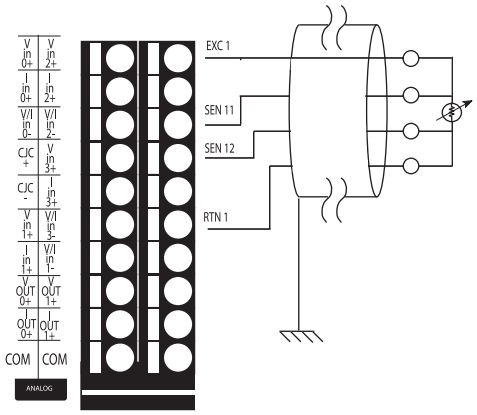

Table 12 lists the available embedded analog output channel types and ranges for the channel type. The configuration choices are made on the Output Configuration tab of the Module Properties dialog box, as shown in the table.

Table 12 - Output Types

Output Type	Output Ranges	Project Configuration
Voltage	• -10…10V • 0…5V • 0…10V • 1…5V	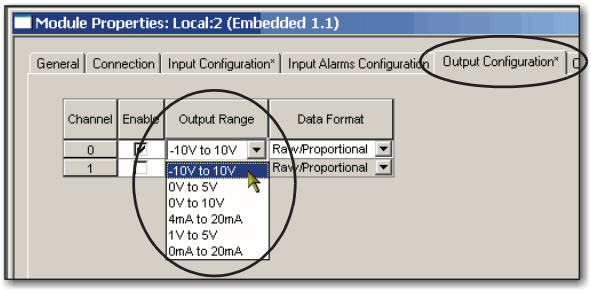
Current	• 4…20 mA • 0…20 mA	

Figure 32 shows an example of wiring input devices to the analog output points on the 1769-L27ERM-QBFC1B controller when it is operating in voltage or current mode.

Figure 32 - 1769-L27ERM-QBFC1B Controller Analog Output Wiring Diagrams

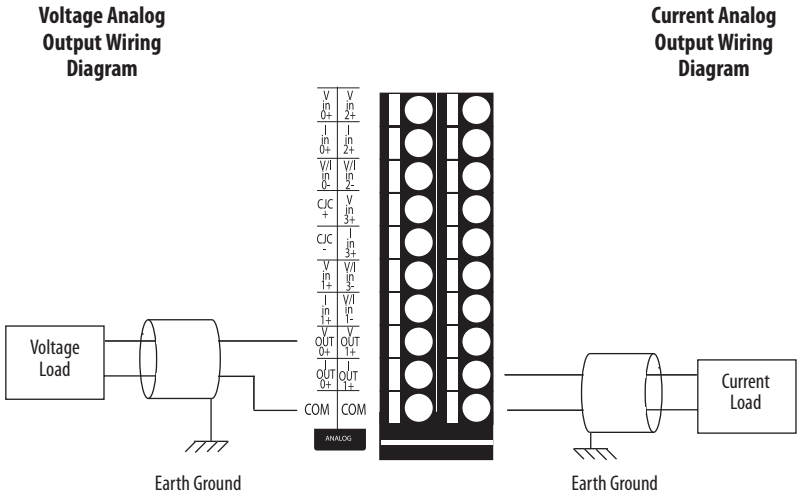

Embedded High-speed Counters

IMPORTANT The embedded high-speed counters are available on only the 1769-L24ER-QBFC1B and 1769-L27ERM-QBFC1B controllers.

The 1769-L24ER-QBFC1B and 1769-L27ERM-QBFC1B controllers support four embedded high-speed counters. Each counter is a differential input. Therefore, two input terminals are required for one counter. For example, the A0+ and A0- terminals are required for counter A0.

The L2 embedded high-speed counters operate like the 1769-HSC module. See 1769-UM006 for further information.

Each counter uses differential inputs that are compatible with standard differential-line driver output devices and single-ended devices. Figure 33 shows the embedded high-speed counter input points.

IMPORTANT Figure 33 shows the embedded high-speed counters on the 1769-L27ER-QB1B controller. The embedded high-speed counter points on the 1769-L24ER-QBFC1B and 1769-L27ERM-QBFC1B controllers are organized and wired the same.

Figure 33 - 1769-L27ERM-QBFC1B Controller Embedded High-speed Counter Wiring Termination Points

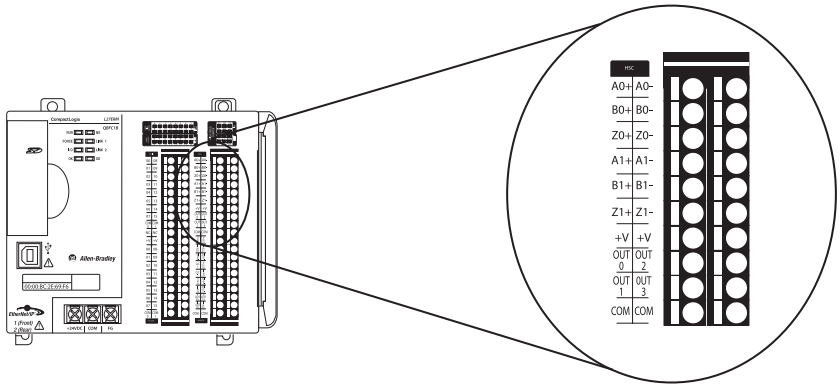

Figure 34 shows an example of a differential encoder that is wired to the embedded high-speed counter inputs on a 1769-L27ERM-QBFC1B controller.

Figure 34 - 1769-L27ERM-QBFC1B Controller Differential Encoder with High-speed Counter Input Wiring Diagram

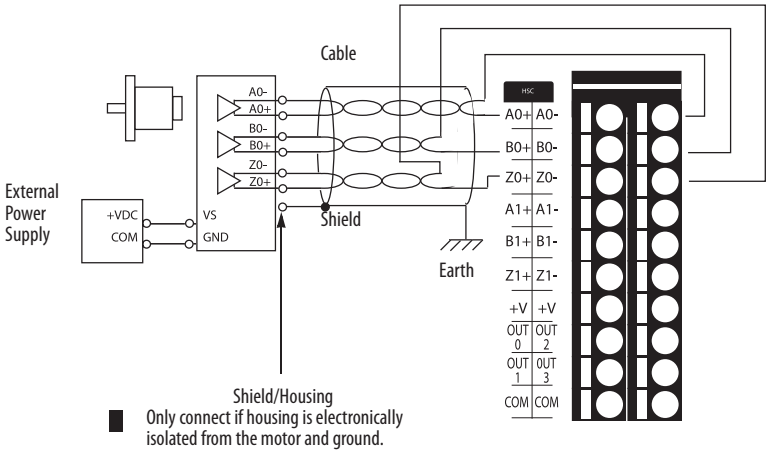

Figure 35 shows an example of a single-ended encoder that is wired to the embedded high-speed counter inputs on a 1769-L27ERM-QBFC1B controller.

Figure 35 - 1769-L27ERM-QBFC1B Controller Single-ended Encoder with High-speed Counter Input Wiring Diagram

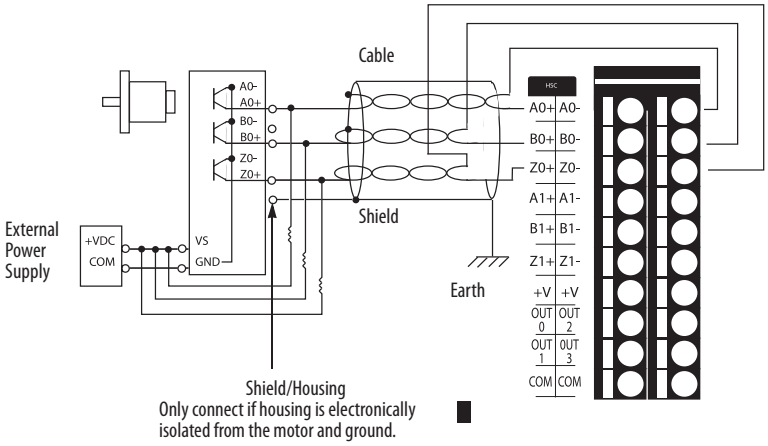

The embedded high-speed counter also supports four output points. Figure 36 shows a wiring diagram for the embedded high-speed counter output points.

IMPORTANT Figure 36 shows the embedded high-speed counter output points on the 1769-L27ER-QB1B controller. The embedded high-speed counter points on the 1769-L24ER-QBFC1B and 1769-L27ERM-QBFC1B controllers are organized and wired the same.

Figure 36 - 1769-L27ERM-QBFC1B Controller Embedded High-speed Counter Output Wiring Diagram

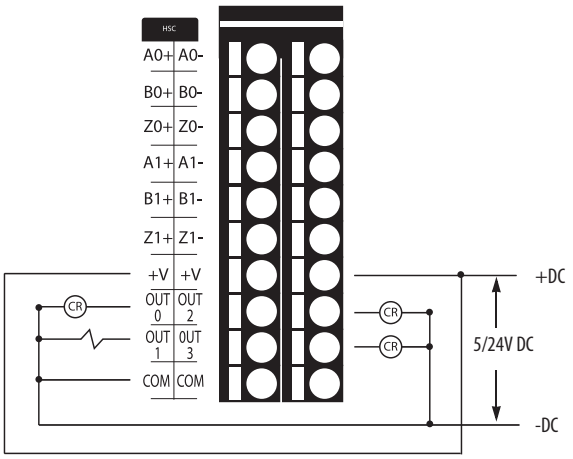

Wiring the Embedded I/O Modules

Complete these steps to wire the input and output points on the CompactLogix 5370 L2 controller.

1. Verify that the control system is not powered.
2. Strip 10 mm (0.39 in) insulation from the end of the wire.
3. Push the wire into the open terminal until it is secure.

   If your wire is too thin to push into the open terminal for secure placement, we recommend that you connect the wire to a ferrule and insert it into the open terminal.

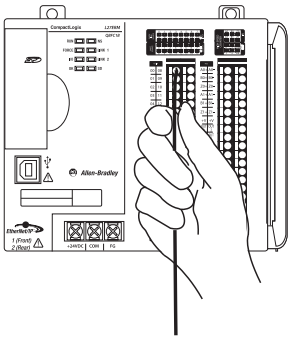

4. Repeat step 3 for all embedded I/O wires that are needed in your application.

To remove a wire from the removable connector, complete these steps.

1. Verify that the control system is not powered.
2. Use a small screwdriver to push the spring release clip and pull out the wire.

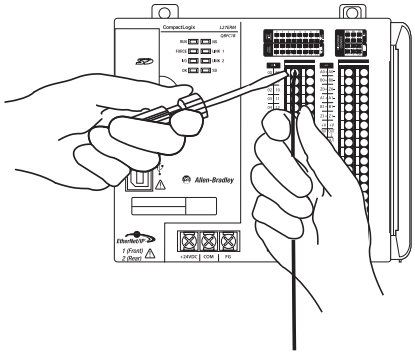

If any issues arise with a removable connector and you suspect a connection point can no longer be functioning as a complete circuit, you can use a continuity tester to determine if the connection point is operating correctly, that is, the connection point is a complete circuit.

The indication mechanism, for example, a light that illuminates on the tester, varies by continuity tester. The following example graphic shows a continuity tester with one connection point. In this case, if the circuit is operating correctly, the indicator light turns on.

Insert a continuity tester into the suspected I/O connection point as shown in the following graphic.

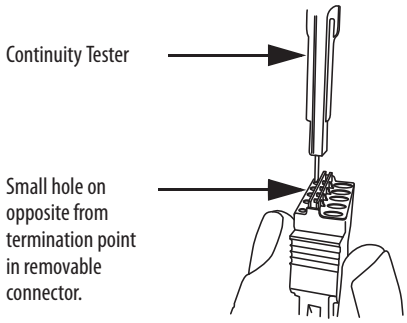

Remove and Replace the Connector

Complete these steps to remove and replace an embedded I/O module connector.

1. Verify that the control system is not powered.

2. Compress the small release clips at the top and bottom of the connecter and tilt the top of the connector away from the module.

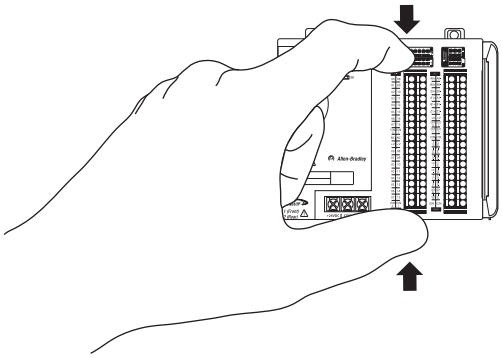

3. Pull the connector away from the module and disconnect any wires.
4. Connect the wires to the replacement connector.
5. Push the connector back into the module and engage the clips to secure it.

Determine Embedded Module Update Time

IMPORTANT This section applies to the 1769-L24ER-QBFC1B and 1769-L27ERM-QBFC1B because only those controllers have and embedded universal analog input points.

The module update time is the time that is required for the module to sample and convert the input signals of all enabled analog input channels and provide the resulting data values to the controller.

The module update time is calculated by adding the update times for each enabled analog input channel on the module. Each channel update time calculation is the result of several configuration choices that are described in the following section.

Channel Update Times

Some combination of the following times determines the channel update time for an enabled analog input channel:

- Channel Input Type and Filter Frequency Selection Update Time - Required for channel update time calculation
- Cold Junction Compensation Update Times - Optional for channel update time calculation time
- Open Circuit Detection Update Time - Optional for channel update time calculation time

Channel Input Type and Filter Frequency Selection Update Time

When you enable an embedded analog input channel, you must select an input type and a filter frequency for that input. The selections that are made determine the value that is required when calculating channel update time.

IMPORTANT Each channel input type has multiple ranges or types. For example, a voltage input type can use one of six voltage ranges, as listed in Table 11 on page 193. Regardless of which voltage range the channel uses, the channel update time remains the same. For more information, see Table 13.

Table 13 shows the channel update times for each channel input type and filter frequency selection.

Table 13 - Channel Update Times

Filter Frequency Selection[1]	Channel Update Times Based on Input Type Selection	
	Voltage, Current or Thermocouple Input Type	Resistance or RTD Input Type
10 Hz	307 ms	614 ms
50 Hz	67 ms	134 ms
60 Hz	57 ms	114 ms
250 Hz	19 ms	38 ms
500 Hz	13 ms	26 ms
1 kHz	11 ms	22 ms

(1) Filter frequency selections are made on the Input Configuration tab of the Module Properties dialog box.

Cold Junction Compensation Update Times

When you use any of the thermocouple input types on your embedded analog input, you must account for more voltage at the junction of the thermocouple field wires and the input point. More voltage can alter the input signal on that point and, therefore, affect the update time of that channel.

The process to account for increased voltage at an input point by using a thermocouple type input is cold junction compensation (CJC). You enable CJC for a given channel on the Input Configuration tab of the Module Configuration dialog box, as shown in the following graphic.

By default, CJC is disabled. You must clear the Disable Cold Junction Compensation checkbox to use CJC for a given channel.

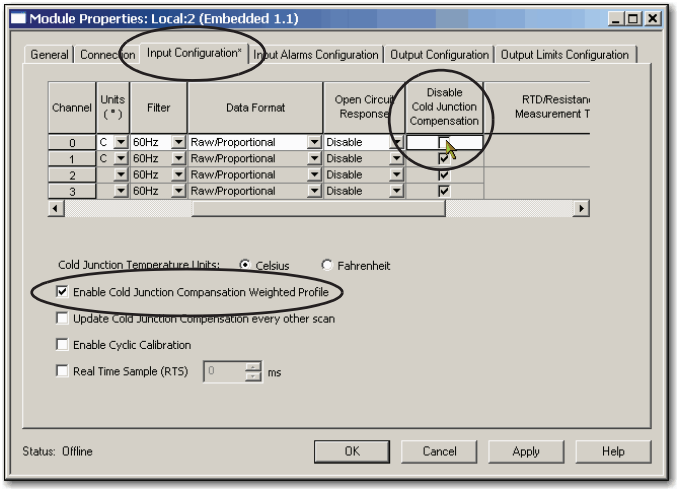

You are not required to enable CJC for a channel by using the thermocouple input type. If you enable CJC and select Update Cold Junction Compensation every other scan, an extra update time exists on the channel. This extra update time increases the overall channel update time.

The filter frequency selection for the channel determines the CJC update time. Table 14 shows the CJC update times that are based on filter frequency selections.

Table 14 - Channel Update Times

Filter Frequency Selection[1]	CJC Update Time
10 Hz	614 ms
50 Hz	134 ms
60 Hz	114 ms
250 Hz	38 ms
500 Hz	26 ms
1 kHz	22 ms

(1) Filter frequency selections are made on the Input Configuration tab of the Module Properties dialog box.

IMPORTANT Keep the following in mind when calculating the CJC update time:

- If multiple input channels are configured to use a thermocouple input type and another filter value is selected for each, the filter frequency selection with the slowest update time determines the filter frequency selection with the slowest update time determines the CJC update time.

  For example, if one input channel uses a thermocouple input with a 50 Hz filter frequency and another input channel uses a thermocouple input with a 60 Hz filter frequency, the CJC channel update time is 134 ms.
- The CJC update time that increases overall module update time is only used once regardless of the number of input channels on a module that have CJC enabled to scan every other scan.

  In other words, if your module uses a filter frequency selection of 250 Hz and includes three channels with CJC enabled to scan every other scan, you only add one instance of CJC update time to the overall equation. Instead of including 38 ms for each channel, you include 38 ms once.

Open Circuit Detection Update Time

Open circuit detection is used to verify that the field wiring is physically connected to the embedded analog input point. If this feature is enabled and field wiring is disconnected from the input, the application alerts you to the condition and an open wire bit is set for the respective input channel in the tags for the project.

Open circuit detection can be enabled or disabled on any channel input type except for an input channel that is configured to use the 0...20 mA input range. The configuration selection is made on the Input Configuration tab on the Module Properties dialog box, as shown in the following graphic. The configuration choice, that is, enabled or disabled, is the result of an Open Circuit Response selection for the channel.

To disable open circuit detection, choose Disable. To enable open circuit detection, choose any of the other four options.

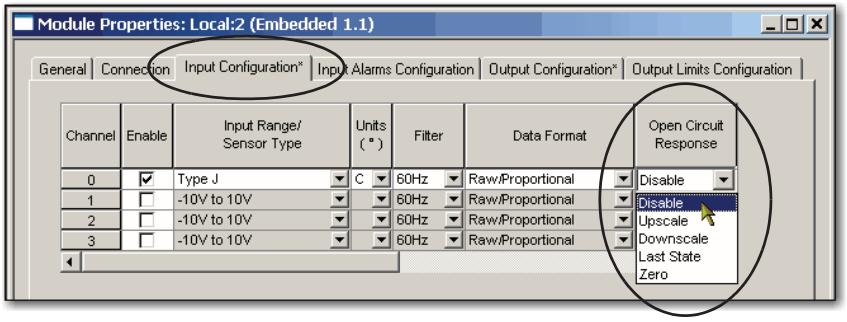

Table 15 describes the module response that is associated with each enable selection.

Table 15 - Open Circuit Detection Response Definitions

Response Option	Definition
Upscale	Sets the input data value to full upper-scale value of channel data word. The selected input type and data format determines the full-scale value.
Downscale	Sets the input data value to full lower-scale value of channel data word. The selected input type and data format determines the low scale value.
Last State	Sets the input data value to the last input value before the detection of the open-circuit.
Zero	Sets the input data value to 0 to force the channel data word to 0.

When you enable open circuit detection for an input channel, an extra update time is used to calculate the overall channel type. The **increase** in channel update time is **11 ms** for each channel that enables open circuit detection response.

Table 16 lists example module update times that are based on channel configurations.

Table 16 - Example Module Update Times

Example Enabled Analog Input Channel Configuration	Channel Update Time Calculations	Module Update Time
• Channel 0: – Input type = Current – Filter Frequency Selection = 60 Hz	57 ms	57 ms
• Channel 0: – Input type = Current – Filter Frequency Selection = 60 Hz • Channel 1: – Input type = RTD – Filter Frequency Selection = 60 Hz	Channel 0 update time + Channel 1 update time 57 ms + 114 ms	171 ms
• Channel 0: – Input type = Voltage – Filter Frequency Selection = 60 Hz – Open Circuit Detection = Enabled • Channel 1: – Input type = RTD – Filter Frequency Selection = 10 Hz	Channel 0 update time + Channel 1 update time (57 ms + 11 ms) + 614 ms	682 ms
• Channel 0: – Input type = Voltage – Filter Frequency Selection = 50 Hz • Channel 1: – Input type = RTD – Filter Frequency Selection = 10 Hz – Open Circuit Detection = Enabled • Channel 2 – Input type = Thermocouple – Filter Frequency Selection = 60 Hz – CJC = Enabled – Open Circuit Detection = Enabled • Channel 3: – Input type = Thermocouple – Filter Frequency Selection = 500 Hz – CJC = Enabled – Open Circuit Detection = Enabled	Channel 0 update time + Channel 1 update time + Channel 2 update time + Channel 3 update time + CJC Update Time 67 ms + (614 ms + 11 ms) + (57 ms + 11 ms) + (13 ms + 11 ms) + 114 ms	898 ms

Embedded Analog I/O Modules Data Arrays

The section describes the data table structures for the embedded analog I/O modules on the CompactLogix 5370 L2 controllers. The embedded analog I/O modules have arrays for the following data:

- Input data
- Output data
- Configuration data

You can access the data via the tags in the application.

IMPORTANT The analog I/O modules data structures apply to only the 1769-L24ER-QBFC1B and 1769-L27ERM-QBFC1B controllers.

The 1769-L24ER-QB1B controller does not have an embedded analog I/O module.

Input Array

The input data array for the embedded analog I/O module contains 11 words as described in Table 17. This array is read-only and the default value for all bits is 0.

Table 17 - CompactLogix 5370 L2 Controller Embedded Analog I/O Module Input Data Array

	Bit															
Word	**15**	**14**	**13**	**12**	**11**	**10**	**9**	**8**	**7**	**6**	**5**	**4**	**3**	**2**	**1**	**0**
0	S	Analog Read (Input) Data Value Channel 0														
1	S	Analog Read (Input) Data Value Channel 1														
2	S	Analog Read (Input) Data Value Channel 2														
3	S	Analog Read (Input) Data Value Channel 3														
4	Nu	Timestamp Value														
5	Nu	UI4	OI4	OC4	OC3	OC2	OC1	OC0	Nu			SI4	SI3	SI2	SI1	SI0
6	LI3	HI3	UI3	OI3	LI2	HI2	UI2	OI2	LI1	HI1	UI1	OI1	LI0	HI0	UI0	OI0
7	S	Cold Junction Compensation Value														
8	S	Output Data Loopback/Echo Channel 0														
9	S	Output Data Loopback/Echo Channel 1														
10	Nu		U01	O01	Nu		U00	O00	Nu						S01	S00

Table 17 - CompactLogix 5370 L2 Controller Embedded Analog I/O Module Input Data Array

	Bit															
Word	**15**	**14**	**13**	**12**	**11**	**10**	**9**	**8**	**7**	**6**	**5**	**4**	**3**	**2**	**1**	**0**
Where:	Analog Read (Input) Data Value Channel x is the data read from the field device that is connected to the channel.															
	Timestamp Value is the timestamp of when data was received at the corresponding channel.															
	Cold Junction Compensation value is the converted CJC data. The data is calculated in the following manner: • If the CJC is open, the converted value is 25 °C (77 °F). • If the CJC is not opened and the Update CJC sensor every other scan option is disabled, the converted value is 25 °C (77 °F). • If the CJC is not opened and the Update CJC sensor every other scan option is enabled, the converted value is the measured temperature.															
	S	Sign bit														
	Nu	Bit not used														
	SI*x*	General status bit for an input channel. Bits 0…3 are for input channels. Bit 4 is for CJC. If the bit is 0, the channel is operating normally. If the bit is 1, a fault has occurred on the channel.														
	OI*x*	Overrange alarm bit for an input channel. 0 = Channel is operating normally 1 = Input signal is over normal range.														
	UI*x*	Underrange alarm bit for an input channel. 0 = Channel is operating normally 1 = For bits 0…3, that is, input channels, the input signal is under the normal range. For bit 4, that is, channel using the thermocouple/mV, RTD/Resistance input type, the input value equals the minimum value of the range.														
	HI*x*	High alarm bit for an input channel 0. 0 = Channel is operating normally 1 = Input signal is above the user-defined range														
	LI*x*	Low alarm bit for an input channel 0. 0 = Channel is operating normally 1 = Input signal is below the user-defined range.														
	OCx	Open circuit detection bit. 0 = Channel is not experiencing an open circuit condition 1 = Channel is experiencing an open circuit condition														
	SO*x*	General status bit for output channel 0 or 1. 0 = Channel operating normally 1 = A fault has occurred on the channel														
	OO*x*	Overrange alarm bit for output channel 0 or 1. 0 = Channel is operating normally 1 = Output signal is over the normal range														
	UO*x*	Underrange alarm bit for output channel 0 or 1. 0 = Channel is operating normally 1 = Output signal is below the normal range														

Output Array

The embedded analog I/O output image array of the module contains four words as described in Table 18. This array is write only and the default value for all bits is 0.

Table 18 - CompactLogix 5370 L2 Controller Embedded Analog I/O Module Output Data Array

Word	Bit															
	15	14	13	12	11	10	9	8	7	6	5	4	3	2	1	0
0	S	Analog Output Data Value Channel 0														
1	S	Analog Output Data Value Channel 1														
2	Nu								CL I3	CH I3	CL I2	CH I2	CL I1	CH I1	CL I0	CH I0
3	Nu												CL O1	CH O1	CL O0	CH O0

Where:		
	Analog Output Data Value Channel x is the data written to the channel.	
	S	Sign bit
	Nu	Bit not used
	CH I*x*	Use this bit to cancel High Process Alarm Latch functionality for an input. 0 = Do not cancel 1 = Cancel the alarm latch
	CL I*x*	Use this bit to cancel Low Process Alarm Latch functionality for an input. 0 = Do not cancel 1 = Cancel the alarm latch
	CH O*x*	Use this bit to cancel High Process Alarm Latch functionality for an output. 0 = Do not cancel 1 = Cancel the alarm latch
	CL O*x*	Use this bit to cancel Low Process Alarm Latch functionality for an output. 0 = Do not cancel 1 = Cancel the alarm latch

Configuration Array

The embedded analog I/O configuration image array of the module contains 43 words as described in Table 19.

Table 19 - CompactLogix 5370 L2 Controller Embedded Analog I/O Module Configuration Image Array

Word	Bit															
	15	14	13	12	11	10	9	8	7	6	5	4	3	2	1	0
0	Real Time Sample Value															
1	ETS	Nu														
2	EC	Nu				EA	AL	EI	EO	Open Circuit Ch0		0V Adj	Filter Setting ChI0			
3	Wire & CLCD		TU ChIo	Nu		Inpt Dta Fm ChI0			Nu		Inpt Tp/RngeSel ChI0					
4	S	Process Alarm High Data Value Universal Input Channel 0														
5	S	Process Alarm Low Data Value Universal Input Channel 0														
6	S	Alarm Dead Band Value Universal Input Channel 0														
7	Nu															
8	EC	Nu				EA	AL	EI	EO	Open Circuit ChI 1		0V Adj	Filter Setting ChI1			
9	Nu		TU ChI1	Nu		Inpt Dta Fm ChI1			Nu		Inpt Tp/RngeSel ChI1					
10	S	Process Alarm High Data Value Universal Input Channel 1														
11	S	Process Alarm Low Data Value Universal Input Channel 1														
12	S	Alarm Dead Band Value Universal Input Channel 1														
13	Nu															
14	EC	Nu				EA	AL	EI	EO	Open Circuit ChI 2		0V Adj	Filter Setting ChI2			
15	Wire & CLCD		TU ChI1	Nu		Inpt Dta Fm ChI2			Nu		Inpt Tp/RngeSel ChI2					
16	S	Process Alarm High Data Value Universal Input Channel 2														
17	S	Process Alarm Low Data Value Universal Input Channel 2														
18	S	Alarm Dead Band Value Universal Input Channel 2														
19	Nu															
20	EC	Nu				EA	AL	EI	EO	Open Circuit ChI 3		0V Adj	Filter Setting ChI3			
21	Nu		TU ChI1	Nu		Inpt Dta Fm ChI3			Nu		Inpt Tp/RngeSel ChI3					
22	S	Process Alarm High Data Value Universal Input Channel 3														
23	S	Process Alarm Low Data Value Universal Input Channel 3														
24	S	Alarm Dead Band Value Universal Input Channel 3														
25	Nu															
26	CJC Ses	Cycle Calib	Nu	CJC WP	Nu											TU CJC
27	Nu															
28	EC	NU							EHI	ELI	LC	ER	FM	PM	Nu	PFE
29	Nu					Outpt Fm ChI0			Nu				Outpt Tp/RngeSel Ch0			
30	S	Fault Value Channel 0														
31	S	Program (Idle) Value Channel 0														
32	S	Clamp High Data Value Channel 0														
33	S	Clamp Low Data Value Channel 0														

Table 19 - CompactLogix 5370 L2 Controller Embedded Analog I/O Module Configuration Image Array

Word	Bit															
	15	14	13	12	11	10	9	8	7	6	5	4	3	2	1	0
34	S	Ramp Rate Channel 0														
35	Nu															
36	EC	Nu							EHI	ELI	LC	ER	FM	PM	Nu	PFE
37	Nu					Outpt Fm Chl1			Nu				Outpt Tp/RngeSel Chl1			
38	S	Fault Value Channel 1														
39	S	Program (Idle) Value Channel 1														
40	S	Clamp High Data Value Channel 1														
41	S	Clamp Low Data Value Channel 1														
42	S	Ramp Rate Channel 1														

Where:		
	EC	Use to enable or disable a channel. Each channel can be individually enabled. 0 = Disable 1 = Enable
	Inpt Dta FM CHI*x*	Use this bit to select the form in which the analog data is returned to the controller and used in the control program.
	EA	Use this bit to enable or disable the process alarms of a channel. 0 = Disable 1 = Enable
	AL	Use this bit to enable or disable alarm latching on theprocess alarm of a channel. 0 = No latch 1 = Latch
	EI	Use this bit to enable or disable interrupts on the process alarms of a channel. 0 = Disable 1 = Enable
	EO	Use this bit to enable or disable Open Circuit functionality on a channel. 0 = Disable 1 = Enable
	Open Circuit Ch*x*	Use to set the Open Circuit Response for a channel. 0 = Upscale 1 = Downscale 2 = Last State 3 = Zero
	0V adjust	CJC is performed by default by taking the CJC sensor temperature value for a given channel, converting that to a thermocouple voltage, and adding that voltage from the measured value before converting to a user value. If this bit is set for a given channel, the signal value is directly converted to a user value (No cold junction compensation performed).
	Wire & CLCD	Use to set the wire mode. The combination of values in bits 14 and 15 determine the mode, as listed in the following table.

Bit 15 Value	Bit 14 Value	Mode
0	0	3-wire and cycle lead compensation - Enable
0	1	3-wire and cycle lead compensation - Disable
1	0	2-wire (No lead compensation)
1	1	4-wire (No lead compensation)

	TU Ch*x*	Use to set the temperature units. 0 = Degrees Celsius 1 = Degrees Fahrenheit

Table 19 - CompactLogix 5370 L2 Controller Embedded Analog I/O Module Configuration Image Array

Word	Bit															
	15	14	13	12	11	10	9	8	7	6	5	4	3	2	1	0
Where (cont.)	Inpt Dta Fm Ch*x*	Use these bits to select the form the analog input data is presented to the controller and used by the controller. The combination of multiple selections in words and bits determines this value. For more information on what selections determine the input data form that is used, see Table 21 on page 217.														
	Inpt Tp / Rnge Sel Ch*x*	Use these bits to select the input type and operating range for a channel. For more information on what selections determine the input type and operating range for a channel, see Table 22 on page 217.														
	Filter Setting Ch*x*	Use these bits to select the filter setting for a channel. For more information on what selections determine the filter settings for a channel, see Table 20 on page 216.														
	Process Alarm High Data Value Channel *x*	Use to configure the Process Alarm High value for a channel. Configuration is done by using words 4, 10, 16, and 22 to set the Alarm High value.														
	Process Alarm Low Data Value Channel *x*	Use to configure the Process Alarm Low value for a channel. Configuration is done by using words 5, 11, 17, and 23 to set the Low High value.														
	Alarm Dead Band Data Value Channel *x*	Use to configure the Alarm Deadband value for a channel. Configuration is done by using words 6, 12, 18, and 24 to set the deadband alarm value.														
	ETS	Use to enable or disable the timestamping function on the module. 0 = Disable 1 = Enable														
	Real Time Stamp Value	Use to set the Real Time Sample value. The available range = 0…5000 ms.														
	Update CJCCompensationEn	Use this bit to enable or disable a CJC sensor. • If enabled, the CJC is read once every other module scan, and its value is updated in the CJC status word. This value is also used for thermocouple cold junction compensation. • If disabled, the CJC sensor value is not acquired, and the CJC temperature is fixed at 25 °C (77 °F) for all channels. The CJC is also fixed at 25 °C (77 °F) for all channels if it is determined to be broken (short or open circuit). 0 = Disable 1 = Enable														
	Cycle Calib	Use this bit to enable Cycle Calibration. • If enabled, the internal calibration of the module occurs once every 5 minutes. • If disabled, the internal calibration of the module occurs only once at power on/ reset. Cycle Calibration enables the module to readjust for environmental changes such as variations in temperature. However, the module throughput is slightly reduced during the calibration operation. 0 = Disable 1 = Enable														

Table 19 - CompactLogix 5370 L2 Controller Embedded Analog I/O Module Configuration Image Array

Word	Bit															
	15	14	13	12	11	10	9	8	7	6	5	4	3	2	1	0
Where (cont.)	CJC WP	Use this bit to enable or disable the CJC Weighted Profile. • If enabled, the CJC temperature for each channel is scaled by multiplying the single CJC reading by a predefined scale factor that is derived from lab measurements of each terminal block pin's stable temperature. In this condition, all channel data is overridden with the CJC temperature of that channel. • If disabled, the single CJC reading is applied directly to all channels. If the CJC sensors are installed in a remote terminal block, the weighted profile must be disabled. In this condition, channel data is presented in the input table as normal. 0 = Disable 1 = Enable															
	PFE	Use this bit to select whether data from the Program/Idle m ode or the Fault Enable mode is applied. 0 = Program/Idle mode data applied 1 = Fault mode data applied														
	ER	Use this bit to enable or disable ramping for each channel. 0 = Disable 1 = Enable														
	EHI	Use this bit to enable or disable the output channel interrupt function when a High Clamp alarm is set. 0 = Disable 1 = Enable														
	ELI	Use this bit to enable or disable the output channel interrupt function when a Low Clamp alarm is set. 0 = Disable 1 = Enable														
	PM	Use this bit to set data a channel uses when it is in Program/Idle mode. 0 = Hold Last State value 1 = User-defined value														
	FM	Use this bit to set data a channel uses when it is in Fault mode. 0 = Hold Last State value 1 = User-defined value														
	LC	Use this bit to enable or disable latch functionality when Low/High clamp and Under/Over range alarm conditions exist on a channel. 0 = Disable 1 = Enable														
	Outpt Dta Fm Ch*x*	Use these bits to select the form the analog output data is presented to the controller and used by the controller. The combination of multiple selections in words and bits determines this value. For more information on what selections determine the output data form that is used, see Table 23 on page 219.														
	Outpt Tp / Rnge Sel Ch*x*	Use these bits to select the output type and operating range for a channel. For more information on what selections determine the input type and operating range for a channel, see Table 24 on page 219.														
	Fault Value Channel *x*	Use this bit to configure the Fault mode value for a channel.														
	Program (Idle) Value Channel *x*	Use this bit to configure the Program/Idle mode value for a channel.														

Table 19 - CompactLogix 5370 L2 Controller Embedded Analog I/O Module Configuration Image Array

Word	Bit															
	15	14	13	12	11	10	9	8	7	6	5	4	3	2	1	0
Where (cont.)	Clamp High Data Value Channel *x*	Use this bit to configure the Clamp High data value for a channel.														
	Clamp Low Data Value Channel *x*	Use this bit to configure the Clamp Low data value for a channel.														
	Ramp Rate Channel *x*	Use this bit to set the Ramp Rate value for a channel.														

Input Filter Selections

Table 20 lists the bit value combinations you can use to select a filter setting for a channel. You use bits 0...3 in words 2, 8, 14, and 20 to make this selection.

Table 20 - Input Filter Selections

Filter Value	Bit Settings (Words 3, 9, 15, and 21)			
	Bit 03	Bit 02	Bit 01	Bit 00
60 Hz	0	0	0	0
50 Hz	0	0	0	1
10 Hz	0	0	1	
250 Hz	0	0	1	1
500 Hz	0	1	0	0
1 kHz	0	1	0	1
Spare(1)	Values 6…15			

(1) An attempt to write a non-valid (any Spare value) or Not Used bit configuration into the Input Filter Response Select field causes a Module Configuration Error (contained in the Mod_Condition Array).

Analog Input Data Format

Table 21 lists the bit value combinations you can use to select the output data format for analog data that is sent to the controller for a channel. You use bits 8...10 in words 3, 9, 15, and 21 to make this selection.

Table 21 - Analog Input Data Format

Analog Output Data Format	Bit Settings (Words 3, 9, 15, and 21)		
	Bit 10	Bit 09	Bit 08
Raw/Proportional Data	0	0	0
Engineering Units	0	0	1
Engineering Units x 10	0	1	0
Scaled for PID	0	1	1
Percent Range	1	0	0
Spare(1)	Values 5…7		

(1) An attempt to write a non-valid (any Spare value) bit configuration into the Input/Output Data Format Select field causes a Module Configuration Error (contained in Mod_Condition Array). All bits shown as 0 in Table 21 are set to 0.

Analog Input Type and Operating Range

Table 22 lists the bit value combinations you can use to select the input type and operating range for a channel. You use bits 0...5 in words 3, 9, 15, 21, 29, and 37 to make the selections.

Table 22 - Analog Input Type and Operating Range

Input Type and Normal Operating Range	Bit Settings (Words 3, 9, 15, and 21)					
	Bit 05	Bit 04	Bit 03	Bit 02	Bit	Bit 00
-10…10V DC	0	0	0	0	0	0
0…5V DC	0	0	0	0	0	1
0…10V DC	0	0	0	0	1	0
4…20 mA	0	0	0	0	1	1
1…5V DC	0	0	0	1	0	0
0…20 mA	0	0	0	1	0	1
-50 mV…50 mv	0	0	0	1	1	0
-100…100 mV	0	0	0	1	1	1
Thermocouple J	0	0	1	0	0	0
Thermocouple K	0	0	1	0	0	1
Thermocouple T	0	0	1	0	1	0
Thermocouple E	0	0	1	0	1	1
Thermocouple R	0	0	1	1	0	0
Thermocouple S	0	0	1	1	0	1
Thermocouple B	0	0	1	1	1	0
Thermocouple N	0	0	1	1	1	1

Table 22 - Analog Input Type and Operating Range

Input Type and Normal Operating Range	Bit Settings (Words 3, 9, 15, and 21)					
	Bit 05	Bit 04	Bit 03	Bit 02	Bit	Bit 00
Thermocouple C	0	1	0	0	0	0
100 Ω PT 385	0	1	0	0	0	1
200 Ω PT 385	0	1	0	0	1	0
500 Ω PT 385	0	1	0	0	1	1
1000 Ω PT 385	0	1	0	1	0	0
100 Ω PT 3916	0	1	0	1	0	1
200 Ω PT 3916	0	1	0	1	1	0
500 Ω PT 3916	0	1	0	1	1	1
1000 Ω PT 3916	0	1	1	0	0	0
10 Ω CU 426	0	1	1	0	0	1
120 Ω Ni 618	0	1	1	0	1	0
120 Ω Ni 672	0	1	1	0	1	1
604 Ω NiFe 518	0	1	1	1	0	0
150 Ω	0	1	1	1	0	1
500 Ω	0	1	1	1	1	0
1000 Ω	0	1	1	1	1	1
3000 Ω	1	0	0	0	0	0

Analog Output Data Format

Table 23 lists the bit value combinations you can use to select the output data format for analog data that is sent to the controller for a channel. You use bits 8...10 in words 29 and 37 to make this selection.

Table 23 - Analog Output Data Format

Analog Output Data Format	Bit Settings (Words 29 and 37)		
	Bit 10	Bit 09	Bit 08
Raw/Proportional Data	0	0	0
Engineering Units	0	0	1
Scaled for PID	0	1	0
Percent Range	0	1	1
Spare(1)	Values 4…7		

(1) An attempt to write a non-valid (any Spare value) bit configuration into the Input/Output Data Format Select field causes a Module Configuration Error (contained in Mod_Condition Array). All bits shown as 0 in Table 23 are set to 0

Analog Output Type and Operating Range

Table 24 lists the bit value combinations you can use to select the input type and operating range for a channel. You use bits 0...5 in words 29 and 37 to make the selections.

Table 24 - Analog Output Type and Operating Range

Output Type and Normal Operating Range	Bit Settings (Words 29 and 37)					
	Bit 05	Bit 04	Bit 03	Bit 02	Bit	Bit 00
-10…10V DC	0	0	0	0	0	0
0…5V DC	0	0	0	0	0	1
0…10V DC	0	0	0	0	1	0
4…20 mA	0	0	0	0	1	1
1…5V DC	0	0	0	1	0	0
0…20 mA	0	0	0	1	0	1

Local Expansion Modules - Optional

CompactLogix 5370 L2 control systems support the use of Compact I/O modules as local expansion modules along a CompactBus backplane:

- The controllers support up to four Compact I/O modules as local expansion modules.
- When possible, use specialty Compact I/O modules to meet unique application requirements.
- Consider using a 1492 wiring system for each I/O module as an alternative to the terminal block that comes with the module.
- Use 1492 PanelConnect™ modules and cables if you are connecting input modules to sensors.
- Install local expansion modules in the same local bank as the CompactLogix 5370 L2 controller.

Install Local Expansion Modules

Complete these steps to install local expansion modules in your CompactLogix 5370 L2 control system.

1. Attach the Compact I/O modules as described in these publications:
   - Compact I/O Modules Installation Instructions, publication 1769-IN088
   - Compact I/O DeviceNet Scanner Module Installation Instructions, publication 1769-IN060
2. Use the tongue-and-groove slots to attach a 1769-ECR Compact I/O end cap terminator to the last module in the system.
3. Move the lever of the end cap bus terminator fully to the left until it clicks to lock the end cap bus terminator.

Wire Local Expansion Modules

Wire each Compact I/O module that is used as a local expansion module according to the technical documentation for that module.

Distributed I/O Modules over an EtherNet/IP Network

You can include distributed I/O modules over an EtherNet/IP network in your CompactLogix 5370 L2 control system.

Consider the following when using distributed I/O modules over an EtherNet/IP network:

- Each remote EtherNet/IP adapter included in the system must be counted toward the maximum number of EtherNet/IP nodes of the controller.

  For more information on maximum number of EtherNet/IP nodes, see Nodes on an EtherNet/IP Network on page 130.

- The configurable RPI settings vary depending on which distributed I/O modules are used in the system.

- For information to add distributed I/O modules to your CompactLogix 5370 L2 control system, see Configure Distributed I/O Modules on a DeviceNet Network on page 236.

The following graphic shows a CompactLogix 5370 L2 control system on an EtherNet/IP network that uses all three I/O module options.

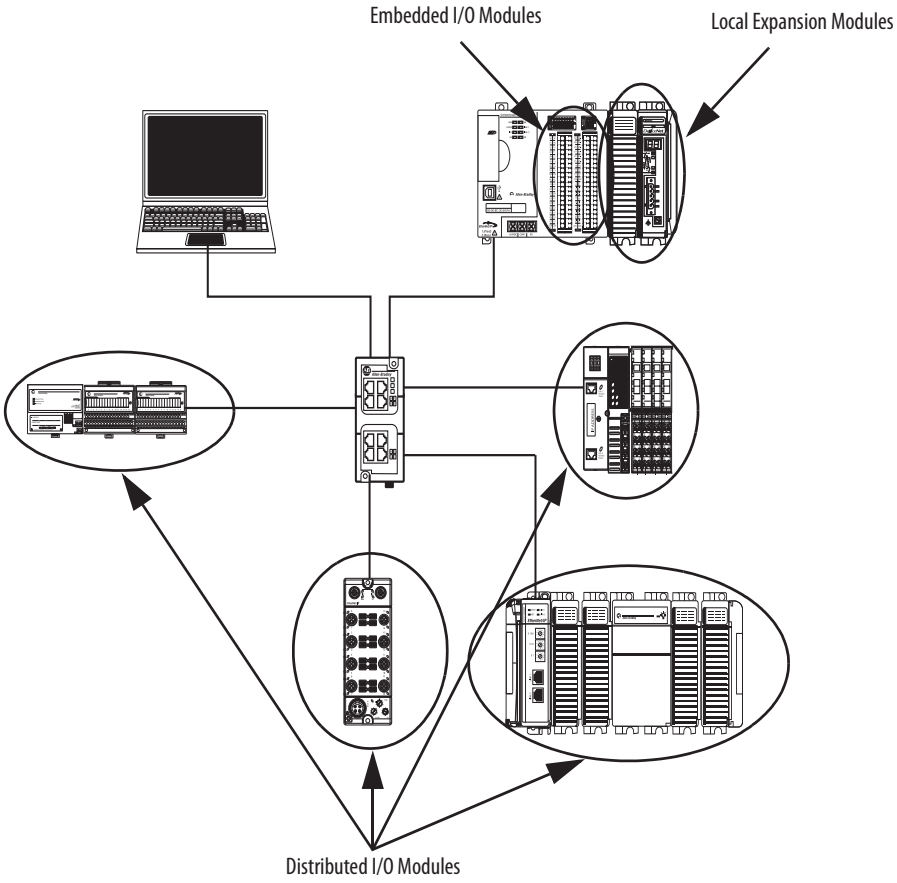

Distributed I/O Modules over a DeviceNet Network

You can include distributed I/O modules over a DeviceNet network in your CompactLogix 5370 L2 control system.

You must use the following to use distributed I/O modules over a DeviceNet network in your CompactLogix 5370 L2 control system:

- Logix Designer application or the Studio 5000 environment - For more information, see Configure Distributed I/O Modules on an EtherNet/IP Network on page 232.
- RSNetWorx for DeviceNet software - For more information, see Configure Distributed I/O Modules on a DeviceNet Network on page 236.

The following graphic shows a CompactLogix 5370 L2 control system on a DeviceNet network that uses all three I/O module options.

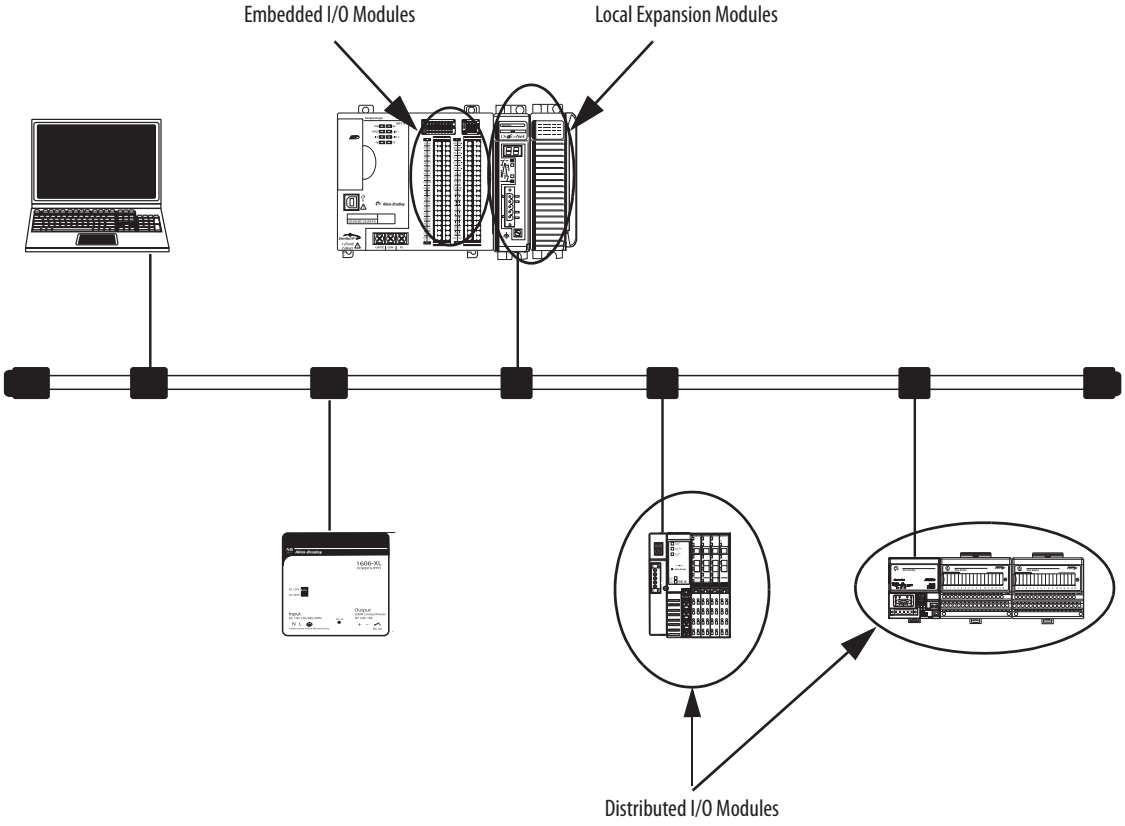

Validate I/O Layout

You must validate the layout of I/O modules in your CompactLogix 5370 L2 control system. Consider these points when validating I/O layout placement:

- Estimate Requested Packet Interval
- Module Fault Related to RPI Estimates
- System Power Availability
- Power Supply Distance Rating

Estimate Requested Packet Interval

The requested packet interval (RPI) defines the frequency at which the controller sends data to and receives data from I/O modules. You set an RPI rate for each I/O module in your system, including embedded I/O modules, local expansion modules, or distributed I/O modules over an EtherNet/IP network.

The CompactLogix 5370 L2 controllers attempt to scan an I/O module at the configured RPI rate. The controller scans distributed I/O modules at the configured RPI rates.

With embedded I/O modules and local expansion modules, however, some system configuration parameters determine the actual rate at which the controller scans the modules. That is, the controller can be configured to scan an I/O module at one rate but actually scan the module at another rate.

For individual I/O modules, a Module RPI Overlap minor fault occurs if there is at least one I/O module that cannot be serviced within its RPI time.

The configuration parameters for a system determine the impact on actual RPI rates. These configuration factors can affect the effective scan frequency for any individual embedded or local expansion module:

- Rates at which RPI values are set for embedded I/O modules
- Number of embedded I/O modules that are used in the system
- Types of embedded I/O modules that are used in the system
- Rates at which RPI values are set for Compact I/O modules
- Number of Compact I/O modules in the system
- Types of Compact I/O modules in the system
- Application user task priorities

Table 25 describes RPI rate guidelines.

Table 25 - Requested Packet Interval Guidelines

Type of Module	Guidelines(1)
All digital	The following guidelines apply: • 1…2 modules can be scanned in 0.5 ms. • 3…4 modules can be scanned in 1 ms. • 5…30 modules can be scanned in 2 ms.
Mix of digital and analog or all analog	The following guidelines apply: • 1…2 modules can be scanned in 0.5 ms. • 3…4 modules can be scanned in 1 ms. • 5…13 modules can be scanned in 2 ms. • 14…30 modules can be scanned in 3 ms.
Specialty	The following conditions apply: • For every 1769-SDN module in the system, increase every RPI by 2 ms for every other module. • For every 1769-HSC module in the system, increase every RPI by 1 ms for every other module. • For every 1769-ASCII module in the system, increase every RPI by 1 ms for every other module. • For every 1769-SM2 module in the system, increase every RPI by 2 ms for every other module.

(1) The guidelines in Table 25 do not factor in the following items, which affect CMX5370 controller CPU loading:
- Periodic/Event User tasks priority <=; IO task priority = User task priority
- IOT (Immediate Output Instruction)
- Messaging
- CompactBus browsing such as accessing DeviceNet network through 1769-SDN using CMX5370 Ethernet or USB connection

Module RPI guidelines can require adjustment (increase of 1 ms or more) if CMX5370 controller application includes one or more of the listings in Table 25. Monitor controller minor faults to determine if Module RPI overlaps have occurred.

IMPORTANT

When considering the number of I/O modules, remember that they can be the embedded I/O modules on the controller or Compact I/O modules that are used as local expansion modules.

Therefore, the consideration for using modules can be any of the following system configurations:
- Only embedded I/O modules
- Only Compact I/O modules
- Some combination of embedded I/O modules and Compact I/O modules

You can set RPI rates higher for individual Compact I/O modules than the rates listed in Table 25. The RPI shows how quickly modules can be scanned, not how quickly an application can use the data. The RPI is asynchronous to the program scan. Other factors, such as program execution duration, affect I/O throughput.

Module Fault Related to RPI Estimates

When following the guidelines described in Table 25, most CompactLogix 5370 L2 control systems operate as expected. Some systems that follow the guidelines can experience a Module RPI Overlap minor fault that is described in the following table.

Name	Fault Information	Condition in Which Fault Occurs
Module RPI Overlap	(Type 03) I/O fault (Code 94) Module RPI overlap detected Module Slot = *x*, where *x* is the slot number of the I/O module in the I/O Configuration section	This fault is logged when the current RPI update of an I/O module overlaps with its previous RPI update. The Minor Faults tab in the Controller Properties dialog box indicates in which module the RPI overlap occurs. If multiple I/O modules experience the fault, the application indicates that the fault occurred on the first such I/O module. Typically, it is an I/O module with a large Input/Output array sizes. Example modules that use large Input/Output array sizes include the 1769-SDN and 1769-HSC modules. In these cases, we recommend that you adjust the RPI of the module to eliminate the fault. Once the fault is cleared from the first I/O module, the application indicates the next module that experiences the fault. This pattern continues until the fault is cleared from all affected I/O modules. To avoid this fault, set the RPI rate of the I/O modules to higher numerical values. We recommend you use an RPI value that is not a common multiple of other module RPI values, such as 2.5 ms, 5.5 ms, or 7 ms: • We recommend that you do not run CompactLogix 5370 L2 control systems with Module RPI Overlap faults. • A system that experiences many Module RPI Overlap faults cannot operate optimally because I/O data is not sampled at the expected rate that RPI settings determine. • When the project is downloaded or the RPI value of a module is adjusted, it is expected to have a minor fault. Faults under these conditions are transitionary. Clear the fault and wait for the fault to reappear before adjusting the RPI value or the task priorities.

System Power Availability

An embedded 24V DC Input, nonisolated power supply powers all components in a CompactLogix 5370 L2 control system.

The embedded power supply provides the following power to the CompactBus:

- 1769-L24ER-QB1B controller:
  - 1.54 A @ 5V DC
  - 0.95 mA @ 24V DC
- 1769-L24ER-QBFC and 1769-L27ERM-QBFC1B controllers:
  - 1 A @ 5V DC
  - 0.8 mA @ 24V DC

The embedded power supply can power any combination of controller, embedded I/O modules, and local expansion modules that are used in your application.

Power Supply Distance Rating

In a CompactLogix 5370 L2 control system, you can install Compact I/O modules on as local expansion modules to the right of the controller system. Compact I/O modules each have a power supply distance rating that you must consider before you install them.

Power supply distance rating is the number of slots a Compact I/O module can be installed away from the power supply. If a Compact I/O module has a distance rating of three, you can include up to two modules between the Compact I/O module and the power supply.

Additionally, the controller has embedded I/O modules that are designed to protect against installation of a Compact I/O module directly to the right of the embedded power supply. CompactLogix 5370 L2 control systems have embedded I/O modules in the controller. CompactLogix 5370 L2 control systems have one or two embedded
I/O modules as described as follows:

- 1769-L24ER-QB1B controller - One embedded I/O module
- 1769-L24ER-QBFC1B and 1769-L27ERM-QBFC1B controllers - Two embedded I/O modules

The embedded I/O modules are not considered local expansion modules. However, you must still include each embedded I/O module in the module slot count when determining where to install Compact I/O module as a local expansion module.

Because CompactLogix 5370 L2 control systems only allow up to four local expansion modules in the system, you can install most Compact I/O modules in any local expansion module slot. Some Compact I/O modules have power supply distance ratings that affect where you can install them in the CompactLogix 5370 L2 control system.

For example, the 1769-ASCII Compact ASCII and 1769-HSC Compact high-speed counter modules each have a power supply distance rating of four. The farthest local expansion module slot where you can install one of these modules in a CompactLogix 5370 L2 control system is module slot number two or three as determined by the controller catalog number that is used in the control system.

Table 26 describes the farthest local expansion module slot where you can install a 1769-HSC high-speed counter module and meet its power supply distance rating requirement.

Table 26 - Example CompactLogix 5370 L2 Control Systems with a 1769-HSC High-speed Counter Module

Controller Cat. No.	Number of Embedded I/O Modules	1769-HSC High-speed Counter Module Power Supply Distance Rating Calculation Impact
1769-L24ER-QB1B	1	The embedded I/O module is the first module in the module count. At its maximum power supply distance rating, the 1769-HSC high-speed counter module can be installed in slot 3 of the local expansion modules, as shown in the following graphic. 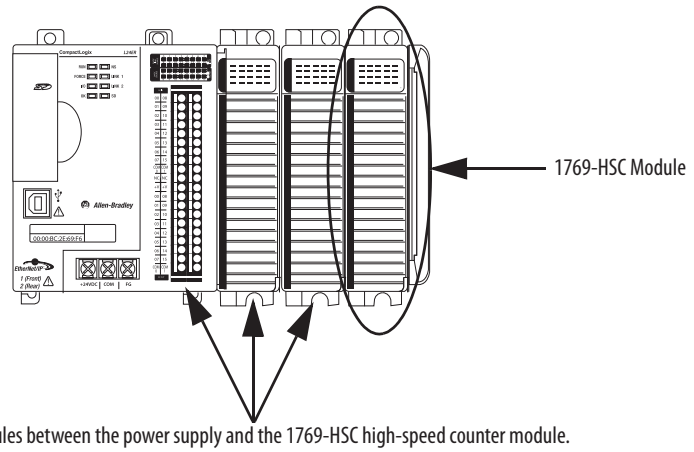 Three modules between the power supply and the 1769-HSC high-speed counter module. With this controller catalog number, you can only install up to two local expansion modules between the controller and the 1769-HSC high-speed counter module.

Table 26 - Example CompactLogix 5370 L2 Control Systems with a 1769-HSC High-speed Counter Module

Controller Cat. No.	Number of Embedded I/O Modules	1769-HSC High-speed Counter Module Power Supply Distance Rating Calculation Impact
1769-L24ER-QBFC1B 1769-L27ERM-QBFC1B	2	The embedded I/O modules are the first two modules in the module count. At its maximum power supply distance rating, the 1769-HSC high-speed counter module can be installed in slot 2 of the local expansion modules, as shown in the following graphic. 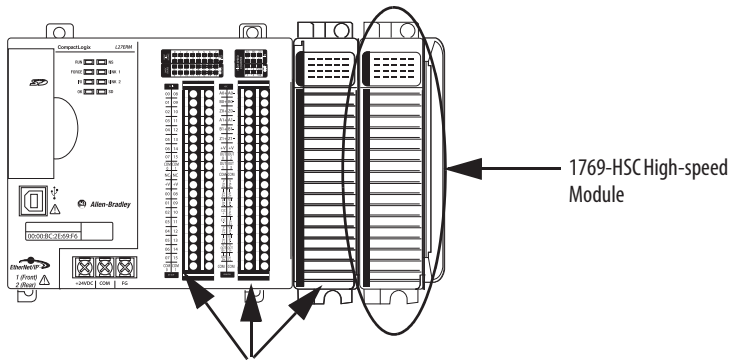 Three modules between the power supply and the 1769-HSC high-speed counter module. With this controller catalog number, you can only install one local expansion modules between the controller and the 1769-HSC high-speed counter. **IMPORTANT** When counting I/O modules to determine the 1769-HSC high-speed counter module placement in a 1769-L24ER-QBFC1B or 1769-L27ERM-QBFC1B control system, the embedded I/O module appearance is different between the physical appearance and the appearance of the module in the application. The physical appearance is a shown in the previous graphic. The second module is two rows of termination points below one set of status indicators. In the application, the second embedded I/O module appears as two modules in the Controller Organizer each with their own slot number, that is [2] and [3]. When the 1769-HSC high-speed counter module is installed in the farthest local expansion module slot possible, that is the fourth module in the system, it appears with a [5] designation in the Controller Organizer, as shown in the following graphic. 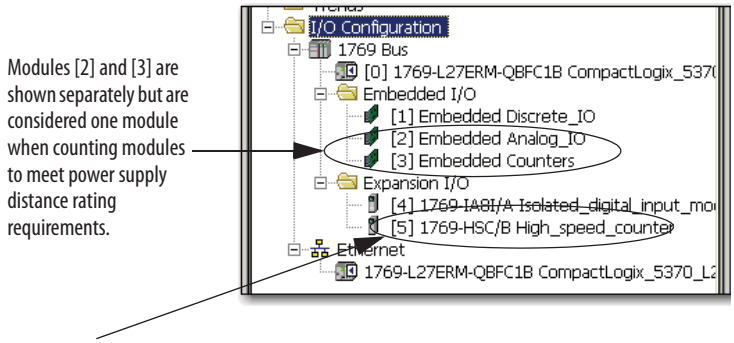

For more information about the power supply distance rating for a Compact I/O module, see CompactLogix Selection Guide, publication 1769-SG001.

Configure Local I/O Modules

You can configure one of these types of local I/O modules in the Studio 5000 environment:

- Configure Embedded I/O Modules
- Configure Local Expansion Modules

Configure Embedded I/O Modules

Embedded I/O modules are automatically created in the I/O Configuration portion of the Controller Organizer. Complete these steps to configure an embedded I/O module in your CompactLogix 5370 L2 control system.

1. Right-click the embedded I/O module and choose Properties.

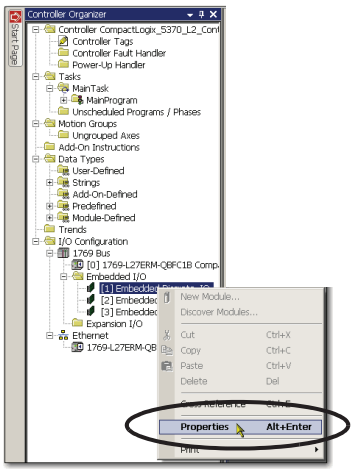

2. Click the required tab, make the necessary changes, and click OK.

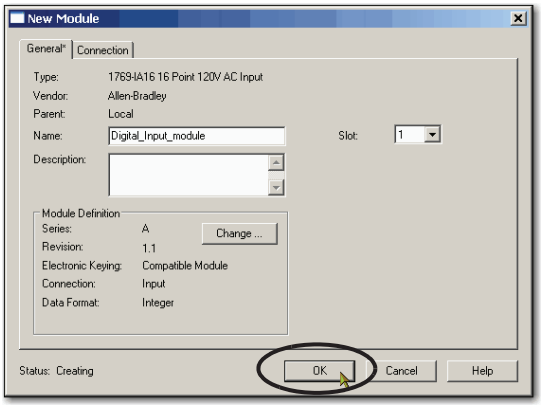

IMPORTANT You can also use the tags to configure the embedded I/O modules of the CompactLogix 5370 L2 controller. When attempting to use the tags to make analog I/O module selections in the input, output and configuration data arrays, the options are complicated.

Configure Local Expansion Modules

Complete these steps to add a Compact I/O module to your CompactLogix 5370 L2 control system and configure it.

1. Right-click the 1769 Bus and choose New Module.

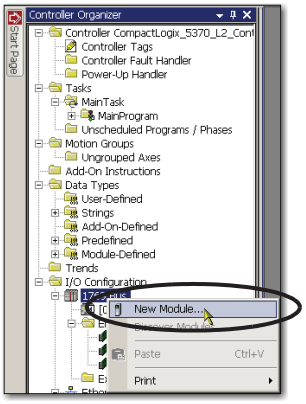

2. Select the desired I/O module and click Create.

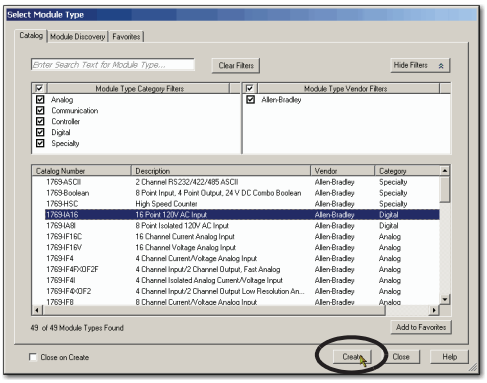

The New Module dialog box appears.

3. Configure the new I/O module as necessary and click OK.

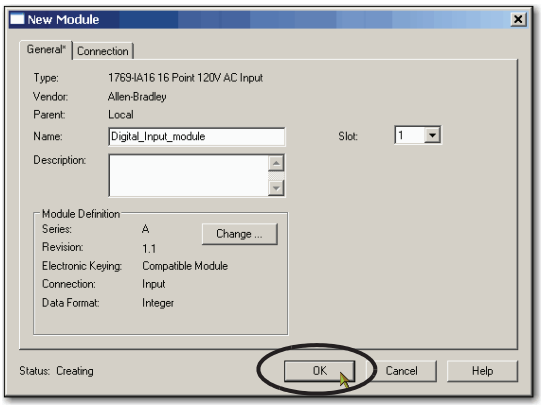

Common Configuration Parameters

While the configuration options vary from module to module, there are some common options you typically configure when using Compact I/O modules in a CompactLogix 5370 L2 control system, as described in Table 27.

Table 27 - Common Configuration Parameters

Configuration Option	Description
Requested packet interval (RPI)	The RPI specifies the interval at which data is transmitted or received over a connection. For 1769 Compact Local I/O modules, data is transmitted to the controller at the RPI. When scanned on the local bus or over an EtherNet/IP network, input modules are scanned at the RPI specified in the module configuration. Typically, you configure an RPI in milliseconds (ms). For I/O modules, the range is 0.5…750 ms. When scanned over a DeviceNet network via a 1769-SDN scanner in the CompactLogix 5370 L2 control system, distributed input modules are scanned at the rate the DeviceNet adapter that connects the input modules to the network supports. For example, if your system includes a remote system of 1734 POINT I/O modules on a DeviceNet network, the 1769-SDN scanner can only scan the distributed 1734 POINT I/O modules as quickly as the 1734-ADN DeviceNet adapter can transmit the data.
Module definition	Set of configuration parameters that affect data transmission between the controller and the I/O module. The parameters include the following: • Series - Hardware series of the module. • Revision - Major and minor firmware revision levels that are used on the module. • Electronic Keying - See LOGIX-AT001 for Electronic Keying information. • Connection - Type of connection between the controller writing the configuration and the I/O module, such as Output. • Data format - Type of data that is transferred between the controller and I/O module and what tags are generated when the configuration is complete.
Module Fault on Controller If Connection Fails While in Run Mode	This option determines how the controller is affected if the connection to an I/O module fails in Run mode. You can configure the project so that a connection failure causes a major fault on the controller or not. The default setting is for the option to be enabled, that is, if the connection to an I/O module fails in Run mode, a major fault occurs on the controller.

I/O Connections

IMPORTANT You can only use direct connections with the local expansion modules in a CompactLogix 5370 L2 control system.

A Logix5000 system uses connections to transmit I/O data, as described in Table 28.

Table 28 - I/O Module Connections

Connection	Description
Direct	A direct connection is a real-time, data-transfer link between the controller and an I/O module. The controller maintains and monitors the connection. Any break in the connection, such as a module fault, causes the controller to set fault status bits in the data area that is associated with the module. Typically, analog I/O modules, diagnostic I/O modules, and specialty modules require direct connections.
Rack-optimized	For digital I/O modules, you can select rack-optimized communication. This option is used with distributed I/O modules and the Rack Optimization connection selection is made when configuring the remote adapter. For example, if your CompactLogix 5370 L2 control system includes distributed digital I/O modules over an EtherNet/IP and you want to use a rack-optimized connection with those digital I/O modules, you must configure the EtherNet/IP adapter of the distributed digital I/O modules to use a connection type of Rack Optimization. A rack-optimized connection consolidates connection usage between the controller and the digital I/O modules in a remote chassis or on one DIN rail. Rather than having individual, direct connections for each I/O module, there is one connection for the entire rack (or DIN rail).

Configure Distributed I/O Modules on an EtherNet/IP Network

Your CompactLogix 5370 L2 control system can use distributed I/O modules on an EtherNet/IP network.

IMPORTANT When adding distributed I/O modules, remember to count the remote Ethernet adapter to remain within the maximum number of EtherNet/IP network nodes limitation for your controller.

The distributed I/O modules that are connected to the controller via the remote Ethernet adapter are not counted toward the maximum Ethernet node limit for the controller.

For example, a 1769-L27ERM-QBFC1B controller supports up to 16 Ethernet nodes. You can add up to 16 remote Ethernet adapters to the I/O Configuration section because each remote adapter counts against the node count. However, you can add as many remote I/O modules to the chassis of the adapter as necessary. Remote I/O modules do not count against the node count.

For more information on node limitations, see Nodes on an EtherNet/IP Network on page 130.

Complete these steps to configure distributed I/O modules on an EtherNet/IP network.

1. Right-click Ethernet and choose New Module.

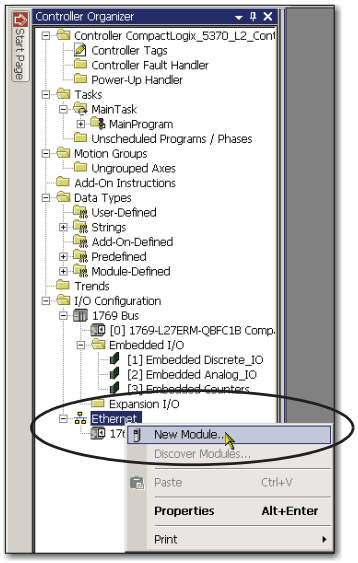

2. Select the desired Ethernet adapter and click Create.

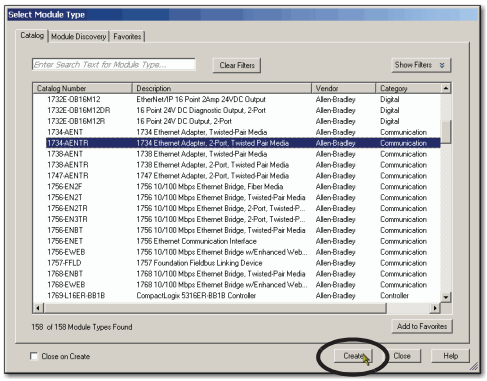

The New Module dialog box appears.

3. Configure the new Ethernet adapter as necessary and click OK.

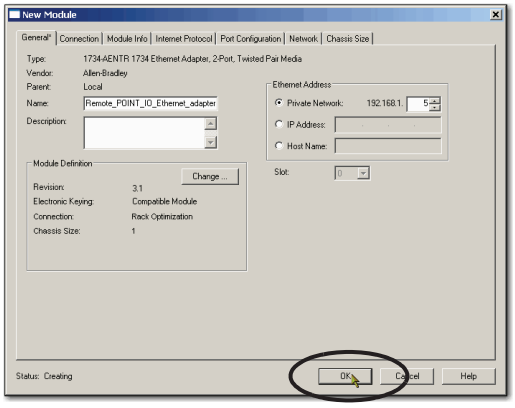

4. Right-click the new adapter and choose New Module.

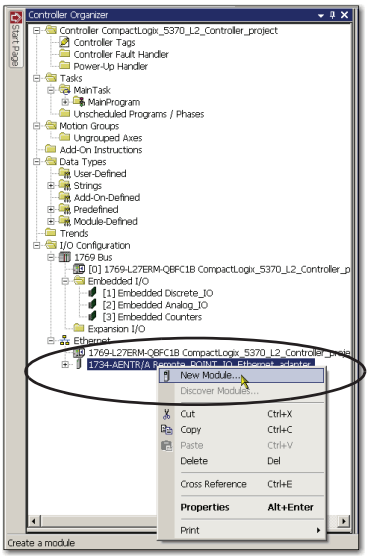

5. Select the desired I/O module and click Create.

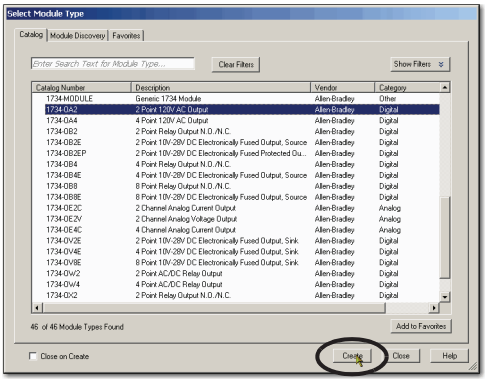

The New Module dialog box appears.

6. Configure the new I/O module as necessary and click OK.

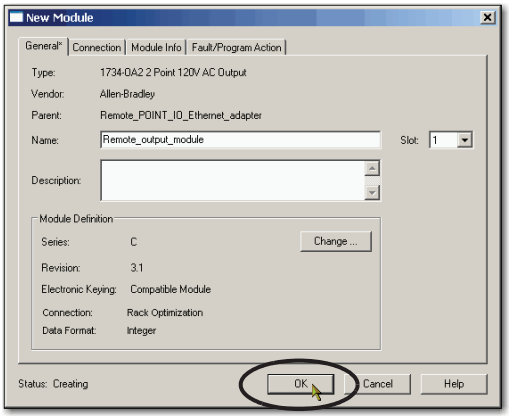

7. Repeat these steps to add all desired distributed I/O modules.

The following graphic is an example of a 1769-L27ERM-QBFC1B control system that uses distributed I/O modules over an EtherNet/IP network.

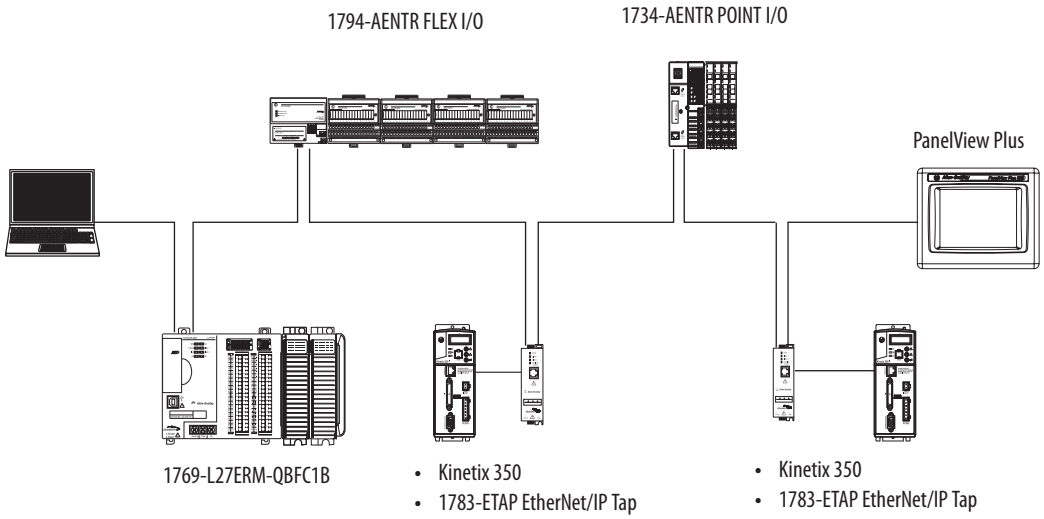

Configure Distributed I/O Modules on a DeviceNet Network

Your CompactLogix 5370 L2 control system can use distributed I/O modules on a DeviceNet network.

Complete these steps to configure distributed I/O modules on a DeviceNet network.

1. If you have not done so, install a 1769-SDN Compact I/O DeviceNet scanner into the local bank of your CompactLogix 5370 L2 control system.
2. Right-click 1769 Bus and choose New Module.

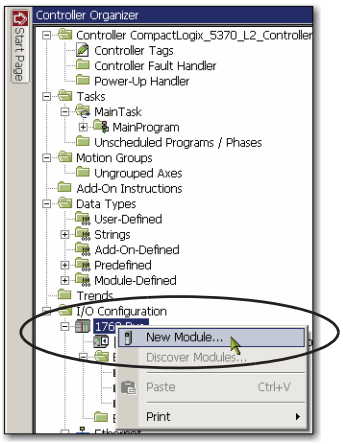

3. Select the 1769-SDN scanner and click Create.

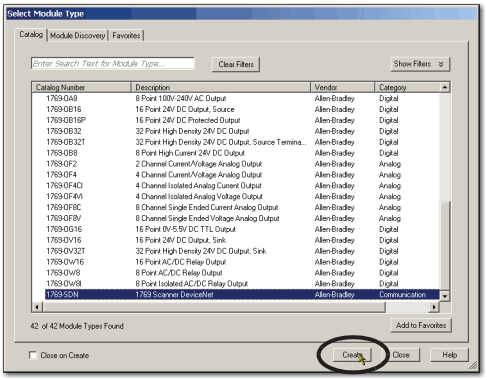

4. Choose a Major Revision and click OK.

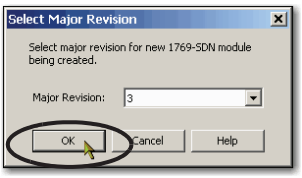

The New Module dialog box appears.

5. Configure the new 1769-SDN scanner as necessary and click OK.

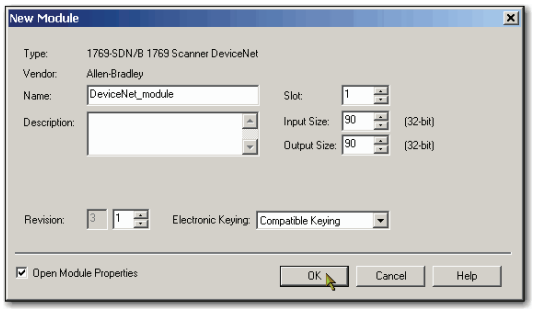

6. Use RSNetWorx for DeviceNet software to define the scan list in the 1769-SDN scanner to communicate data between the devices and the controller through the scanner.

The following graphic is an example of a 1769-L27ERM-QBFC1B control system that uses distributed I/O modules on a DeviceNet network.

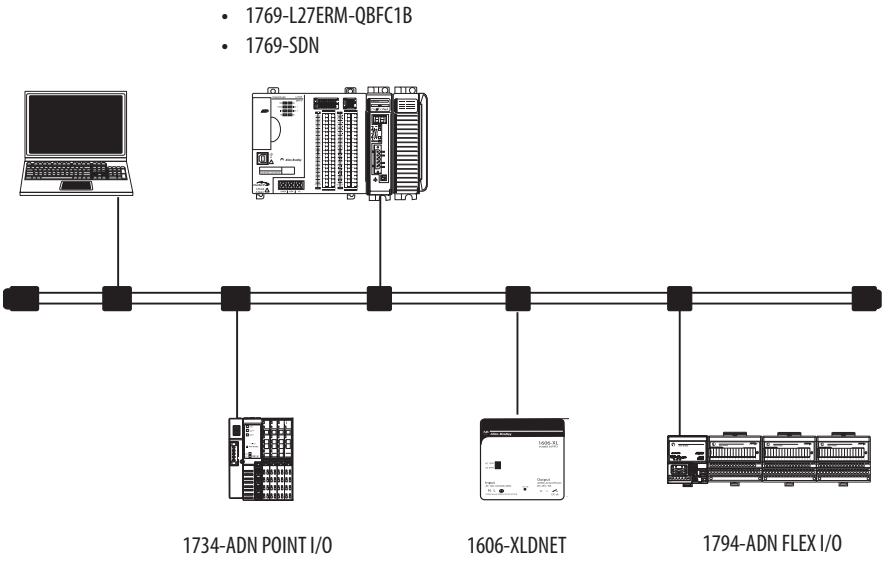

Monitor I/O Modules

With CompactLogix 5370 L2 controllers, you can use the following options to monitor I/O modules:

- Quick View Pane below the Controller Organizer
- Connection tab in the Module Properties dialog box
- Programming logic to monitor fault data so you can act.

When a fault occurs on an I/O module, a yellow triangle on the module listing in the Controller Organizer alerts you to the fault, as shown in the following graphic.

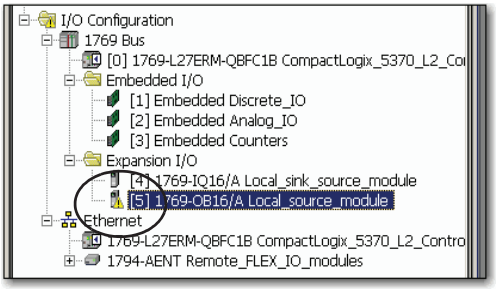

The following graphic shows the **Quick View Pane**, which indicates the type of fault.

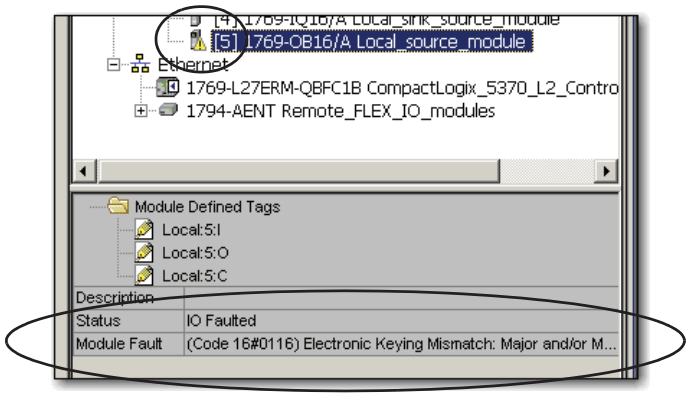

To see the fault description on the **Connection tab** in Module Properties dialog box, complete these steps.

1. In the I/O Configuration, right-click the faulted I/O module and choose Properties.

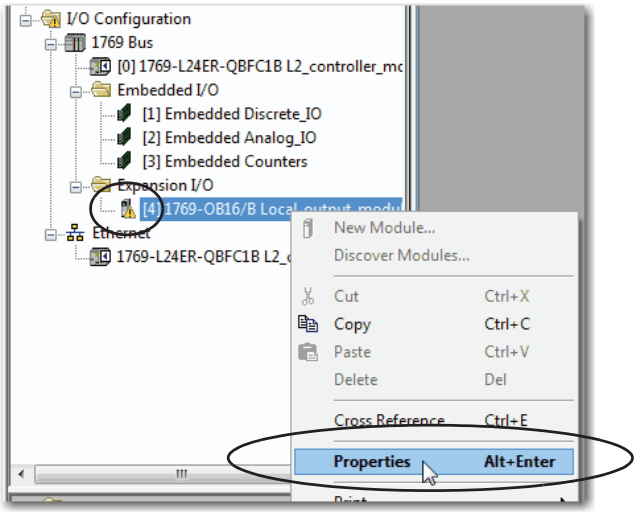

2. Click the Connection tab and use the fault description, in the Module Fault section, to diagnose the issue.

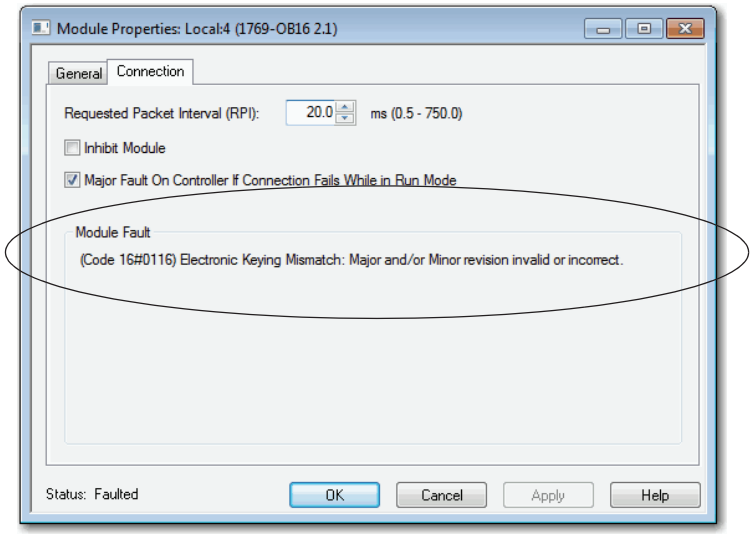

3. Click OK to close the dialog box and remedy the issue.

End Cap Detection and Module Faults

End cap detection is performed through the last module on a 1769 Bus. If that module experiences a fault such that it cannot communicate on the 1769 Bus, the following events occur:

- End cap detection fails
- Controller faults

Use I/O Modules with CompactLogix 5370 L3 Controllers

This chapter explains how to use Compact I/O modules in a CompactLogix 5370 L3 control system.

Topic	Page
Select I/O Modules	241
Validate I/O Layout	246
Configure I/O	257
Configure Distributed I/O Modules on an EtherNet/IP Network	259
Configure Distributed I/O Modules on a DeviceNet Network	262
Monitor I/O Modules	264

Select I/O Modules

CompactLogix 5370 L3 control systems offer these I/O module options:

- Local Expansion Modules
- Distributed I/O Modules over an EtherNet/IP Network
- Configure Distributed I/O Modules on a DeviceNet Network

Local Expansion Modules

CompactLogix 5370 L3 control systems support the use of Compact I/O modules as local expansion modules along a CompactBus backplane.

Consider the following when using local expansion modules:

- The controllers support this many local Compact I/O modules across up to three I/O banks, that is, the local bank and two more banks.

Cat. No.	Local Expansion Modules Supported, max
1769- L30ER 1769-L30ERM 1769-L30ER-NSE	8
1769-L33ER 1769-L33ERM	16
1769-L36ERM	30

- When possible, use specialty Compact I/O modules to meet unique application requirements.
- Consider using a 1492 wiring system for each I/O module as an alternative to the terminal block that comes with the module.
- Use 1492 PanelConnect™ modules and cables if you are connecting input modules to sensors.

Install Local Expansion Modules

Complete these steps to install local expansion modules in your CompactLogix 5370 L3 control system:

1. Attach the 1769 Compact communication or I/O modules as described in these publications:
   - Compact I/O Modules Installation Instructions, publication 1769-IN088
   - Compact I/O DeviceNet Scanner Module Installation Instructions, publication 1769-IN060
2. If your system uses only a **local bank**, complete these steps.
   a. Use the tongue-and-groove slots to attach a 1769-ECR Compact I/O end cap terminator to the last module in the system.
   b. Move the lever of the end cap bus terminator fully to the left until it clicks to lock the end cap bus terminator.

3. If your system uses **more banks**, follow these steps.
   a. Install a 1769-CR*x* Compact I/O communication bus expansion cable at the right end of the **local bank**.
   b. Connect the 1769-CR*x* cable to the additional bank as necessary.

      That is, how you connect to the first extra bank—on the right or left side of the bank, determines the expansion cable that is installed at the end of the local bank. See Figure 37 on page 243 for examples of how to connect a local bank to extra banks.
   c. Complete the installation of the remaining banks in your system.

IMPORTANT	Make sure that you install an end cap at the end of the last bank in your system.

The following example shows example systems with local expansion modules included.

Figure 37 - Example CompactLogix 5370 L3 Control Systems

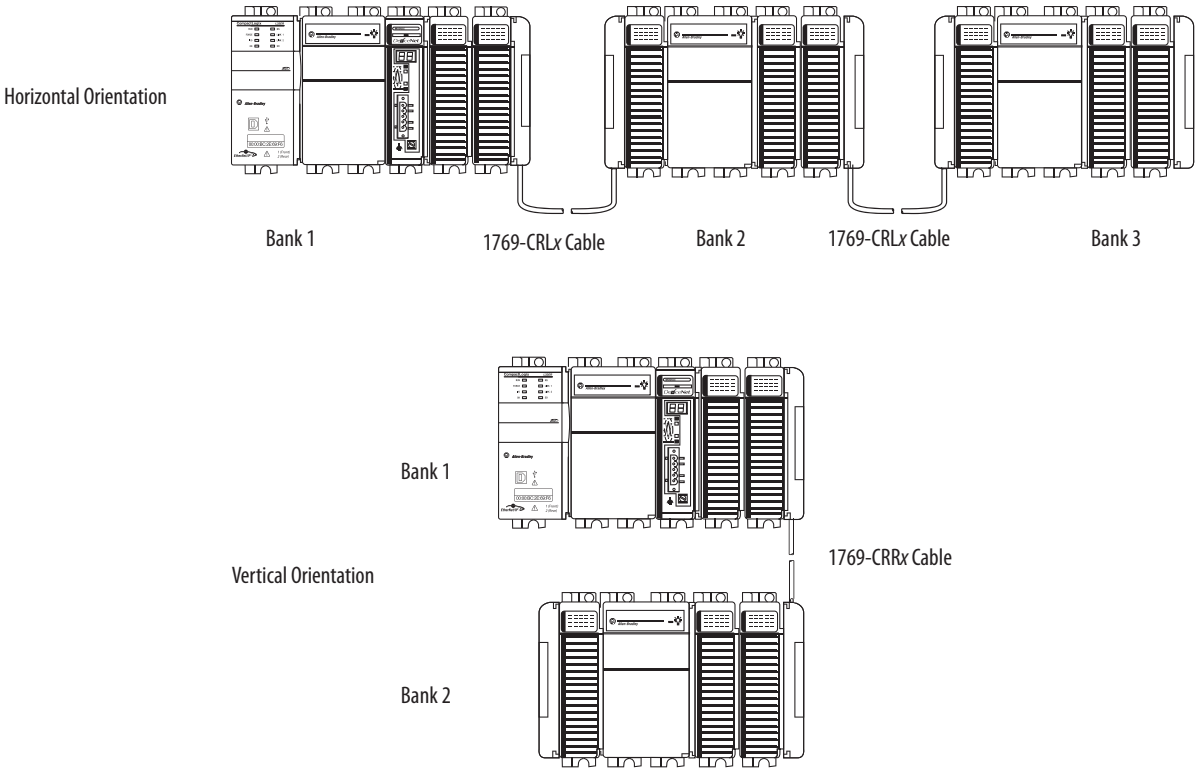

Wire Local Expansion Modules

Wire each Compact I/O module that is used as a local expansion module according to the technical documentation for that module.

Distributed I/O Modules over an EtherNet/IP Network

You can include distributed I/O modules over an EtherNet/IP network in your CompactLogix 5370 control system. Consider the following when using distributed I/O modules over an EtherNet/IP network:

- Each remote EtherNet/IP adapter included in the system must be counted toward the maximum number of EtherNet/IP nodes for the controller.

  For more information on maximum number of EtherNet/IP nodes, see Nodes on an EtherNet/IP Network on page 130.

- The configurable RPI settings vary depending on which distributed I/O modules are used in the system.

- For information to add distributed I/O modules to your CompactLogix 5370 control system, see Configure Distributed I/O Modules on a DeviceNet Network on page 262.

The following graphic shows an example 1769-L33ERM control system that uses local expansion modules and distributed I/O modules over an EtherNet/IP network.

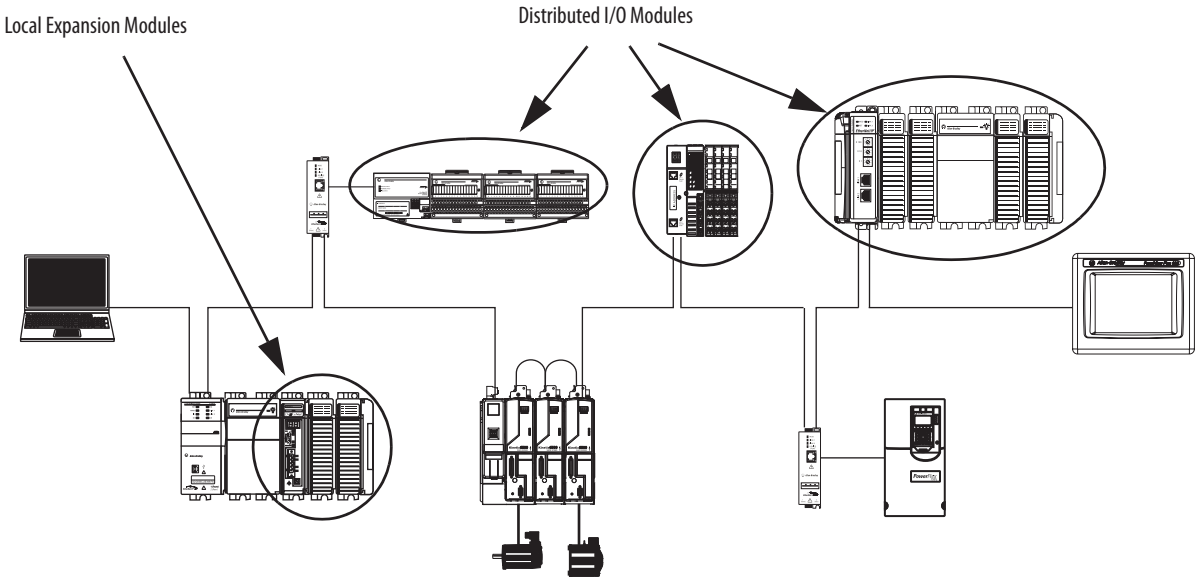

Distributed I/O Modules over a DeviceNet Network

You can include distributed I/O modules over a DeviceNet network in your CompactLogix 5370 L3 control system. Consider the following when using distributed I/O modules over a DeviceNet network:

You must use the following to use distributed I/O modules over a DeviceNet network in your CompactLogix 5370 L3 control system:

- Logix Designer application or the Studio 5000 environment - For more information, see Configure Distributed I/O Modules on an EtherNet/IP Network on page 259.
- RSNetWorx for DeviceNet software - For more information, see DeviceNet Network Communication on page 143.

The following graphic shows an example 1769-L33ERM control system that uses local expansion modules and distributed I/O modules over a DeviceNet network.

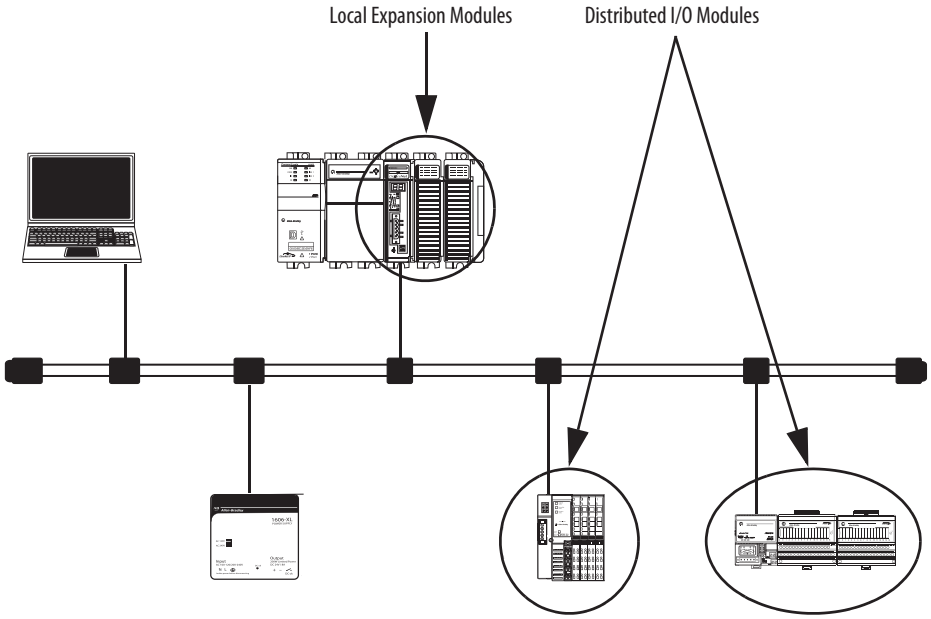

Validate I/O Layout

After you have selected your I/O modules, you must validate the system that you want to design. Consider these points when validating I/O layout placement:

- Estimate Requested Packet Interval
- Module Fault Related to RPI Estimates
- Calculate System Power Consumption
- Power Supply Distance Rating
- Physical Placement of I/O Modules

Estimate Requested Packet Interval

The requested packet interval (RPI) defines the frequency at which the controller sends data to and receives data from I/O modules. You set an RPI rate for each I/O module in your system.

The CompactLogix 5370 L3 controllers attempt to scan an I/O module at the configured RPI rate. For individual I/O modules, a Module RPI Overlap minor fault occurs if there is at least one I/O module which cannot be serviced within its RPI time.

The configuration parameters for a system determine the impact on actual RPI rates. These configuration factors can affect the effective scan frequency for any individual module:

- Rates at which RPI rates are set for other Compact I/O modules
- Number of other Compact I/O modules in the system
- Types of other Compact I/O modules in the system
- Application user task priorities

Table 29 describes RPI rate guidelines.

Table 29 - Requested Packet Interval Guidelines

Type of Module	Guidelines(1)
All digital	The following guidelines apply: • 1…2 modules can be scanned in 0.5 ms. • 3…4 modules can be scanned in 1 ms. • 5…30 modules can be scanned in 2 ms.
Mix of digital and analog or all analog	The following guidelines apply: • 1…2 modules can be scanned in 0.5 ms. • 3…4 modules can be scanned in 1 ms. • 5…13 modules can be scanned in 2 ms. • 14…30 modules can be scanned in 3 ms.
Specialty	The following conditions apply: • For every 1769-SDN module in the system, increase the RPI of every other module by 2 ms. • For every 1769-HSC module in the system, increase the RPI of every other module by 1 ms. • For every 1769-ASCII module in the system, increase the RPI of every other module by 1 ms. • For every 1769-SM2 module in the system, increase the RPI of every other module by 2 ms.

(1) The guidelines in Table 29 do not factor in the following items, which affect CMX5370 controller CPU loading:
- Periodic/Event User tasks priority <=; IO task priority = User task priority
- IOT (Immediate Output Instruction)
- Messaging
- CompactBus browsing such as accessing DeviceNet network through 1769-SDN using CMX5370 Ethernet or USB connection

Module RPI guidelines can require adjustment (increase of 1 ms or more) if CMX5370 controller application includes one or more of the listings in Table 29. Monitor controller minor faults to determine if Module RPI overlaps have occurred.

You can set the RPI rates of individual Compact I/O modules higher than the rates listed in Table 29. The RPI shows how quickly modules can be scanned, not how quickly an application can use the data. The RPI is asynchronous to the program scan. Other factors, such as program execution duration, affect I/O throughput.

Module Fault Related to RPI Estimates

When following the guidelines described in Table 29, most CompactLogix 5370 L3 control systems operate as expected. Some systems that follow the guidelines can experience a Module RPI Overlap minor fault as described in the following table.

Name	Fault Information	Condition In Which Fault Occurs
Module RPI Overlap	(Type 03) I/O fault (Code 94) Module RPI overlap detected Module Slot = *x*, where *x* is the slot number of the I/O module in the I/O Configuration section	This fault is logged when the current RPI update of an I/O module overlaps with its previous RPI update. The Minor Faults tab in the Controller Properties dialog box indicates in which module the RPI overlap occurs. If multiple I/O modules experience the fault, the application indicates that the fault occurred on the first such I/O module. Typically, it is an I/O module with a large Input/Output array sizes. Example modules that use large Input/Output array sizes include the 1769-SDN and 1769-HSC modules. In these cases, we recommend that you adjust the RPI of the module to eliminate the fault. Once the fault is cleared from the first I/O module, the application indicates the next module that experiences the fault. This pattern continues until the fault is cleared from all affected I/O modules. To avoid this fault, set the RPI rate of the I/O modules to higher numerical values. We recommend you use an RPI value that is not a common multiple of other module RPI values, such as 2.5 ms, 5.5 ms, or 7 ms. • We recommend that you do not run CompactLogix 5370 L3 control systems with Module RPI Overlap faults. • A system that experiences many Module RPI Overlap faults cannot operate optimally because I/O data is not sampled at the expected rate that the RPI settings determine. • When the project is downloaded or the RPI value of an I/O module is adjusted, it is expected to have a minor fault. Faults under these conditions are transitionary. Clear the fault and wait for the fault to reappear before adjusting the RPI value or the task priorities.

Calculate System Power Consumption

The 1769 Compact I/O power supplies provide power to CompactLogix local and more banks. The provided power is measured in current capacity.

Consider these points when designing your CompactLogix 5370 L3 control system banks:

- 1769 Compact I/O power supplies have two maximum current capacity requirements that affect how you design and configure one bank.

  The following are the maximum current capacity requirements:
  - Maximum current capacity for one bank
  - Maximum current capacity for each side of the power supply

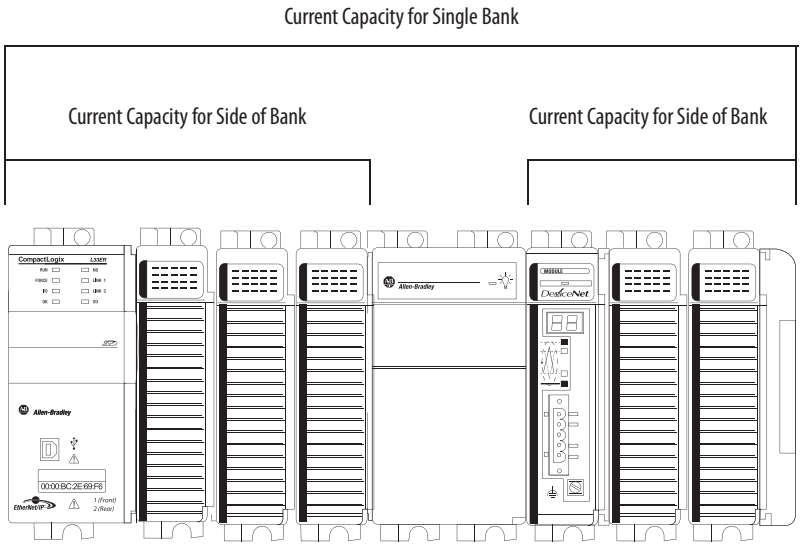

- The maximum current capacity requirements vary by the power supply that is used in the bank.

Power Supply Cat. No.	Current Capacity, max for Single Bank	Current Capacity, max for Each Side of Bank(1)
1769-PA2	2 A at 5V DC and 0.8 A at 24V DC	1 A at 5V DC and 0.4 A at 24V DC
1769-PB2		
1769-PA4	4 A at 5V DC and 2 A at 24V DC	2 A at 5V DC and 1 A at 24V DC
1769-PB4		

(1) Specification for banks with devices on left and right sides of the power supply.

Calculate Power Consumption in Single Bank

IMPORTANT One bank requires the CompactLogix 5370 L3 controllers to reside in the leftmost slot. At minimum, you must calculate the power consumption of the controller on the left side of the power supply.

If more modules are installed on the left side of the power supply, you must calculate the power consumption for those modules as well.

If more modules are installed to the right of the power supply, you must calculate the power consumption for that side separately.

Use this table to calculate power consumption in one bank.

Table 30 - Module Power Consumption Calculation for a Local Bank

Side of Power Supply	Device Cat. No.	Number of Modules(3)	Module Current Requirements		Calculated Current = (Number of Modules) x (Module Current Requirements)	
			at 5V DC (in mA)	at 24V DC (in mA)	at 5V DC (in mA)	at 24V DC (in mA)
Left - Required	1769-L30ER 1769-L30ERM 1769-L30ER-NSE 1769-L33ER 1769-L33ERM 1769-L36ERM	1	500	225	500	225
Left - Optional	I/O Module-specific	Up to 3	Module-specific	Module-specific		
				Total Current Required(2):		
Right	I/O Module-specific **IMPORTANT**: Insert a separate row in this calculation for each I/O module.	Up to 8	Module-specific	Module-specific		
				Total Current Required(2):		
				Total Current Required for Single Bank if Modules Are Installed on Both Sides of the Power Supply(1):		

(1) This number must not exceed the power supply current capacity for the bank.
(2) This number must not exceed the power supply current capacity for this side of the bank.
(3) In the local bank, you can only install up to three modules to the left of the power supply because the CompactLogix 5370 L3 controllers have a power supply distance rating of four and must be within four slots of the Compact I/O power supply. On the right side of the power supply in the local bank and both sides of the power supply in more banks, you can install up to eight modules if power supply distance ratings for the modules validate the system design.

Calculate Power Consumption in an Additional Bank

IMPORTANT In extra banks, you can install I/O modules to the left side, right side, or both sides of the power supply.

The system design determines how to use the following table.

Use this table to calculate power consumption in an extra bank.

Table 31 - Module Power Consumption Calculation for an Additional Bank

Side of Power Supply	Device Cat. No.	Number of Modules(3)	Module Current Requirements		Calculated Current = (Number of Modules) x (Module Current Requirements)	
			at 5V DC (in mA)	at 24V DC (in mA)	at 5V DC (in mA)	at 24V DC (in mA)
Left - Optional in an extra bank	I/O Modules **IMPORTANT**: Insert a separate row in this calculation for each I/O module.	Up to 8	Module-specific	Module-specific		
				Total Current Required(2):		
Right - Optional in one bank	I/O Modules **IMPORTANT**: Insert a separate row for each I/O module.	Up to 8	Module-specific	Module-specific		
				Total Current Required(2):		
				Total Current Required for Bank if Modules Are Installed on Both Sides of the Power Supply(1):		

(1) This number must not exceed the power supply current capacity for the bank.
(2) This number must not exceed the power supply current capacity for this side of the bank.
(3) You can install up to eight modules in additional banks if the power supply distance ratings for the modules validate the system design.

Physical Placement of I/O Modules

Depending on the controller catalog number, CompactLogix 5370 L3 controllers support between 8 and 30 I/O modules. For more information on catalog numbers, see Local Expansion Modules on page 242.

Consider these factors when determining the physical placement of the I/O modules:

- You can install I/O modules in local and extra banks.
- You can install I/O modules to the left and right of the power supply.
- When a system requires multiple banks, you can install the additional banks horizontally or vertically, as shown in this graphic.

Horizontal Orientation

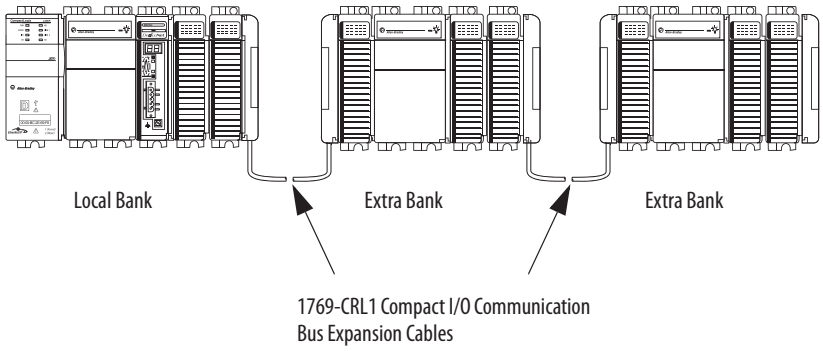

Vertical Orientation

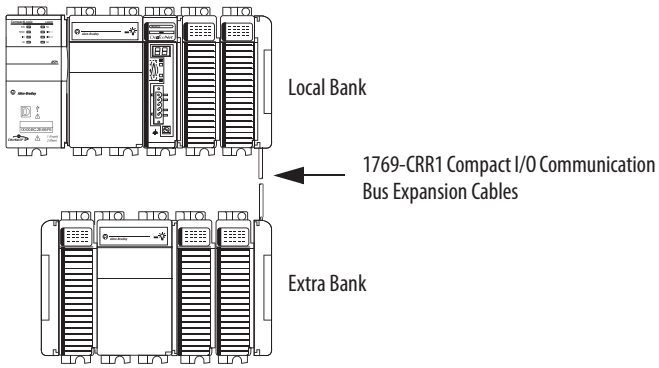

- Each I/O module also has a power supply distance rating and maximum current draw. Considered jointly, distance ratings and current draw determine where I/O modules can be placed in a bank and what configuration of modules can be installed in the bank.

  For more information on power supply distance ratings, see Power Supply Distance Rating on page 73. For more information on system power consumption, see Calculate System Power Consumption on page 249.

Local Bank

To validate the local bank design, confirm that the design meets these requirements:

- The controller is the leftmost device in the local bank.
- No more than three modules are installed between the controller and the left side of the power supply.
- No more than eight modules are installed to the right of the power supply.
- The power consumption of the modules on each side of the power supply does not exceed the capacity of the power supply for that side.
- The total power consumption by all modules in the bank does not exceed the capacity of the power supply for the entire bank.
- Modules are installed such that all power supply distance rating and system power consumption requirements are met.

  For example, the 1769-SDN scanner has a power supply distance rating of four. If the design includes the installation of a 1769-SDN scanner with greater than three modules between it and the power supply, the design is invalid.

IMPORTANT Regarding power supply distance ratings, if you install a module that violates its power supply distance rating specification, the system can appear to operate normally for a time, but could experience operational issues over time, such as I/O faults.

The following example graphic shows a local bank.

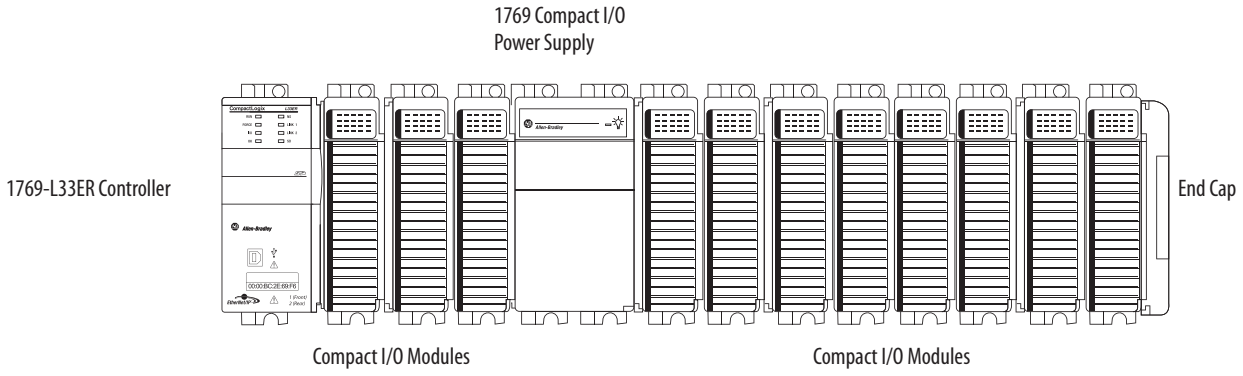

Additional Banks

If your application calls for twelve or more I/O modules, at minimum, you must install the modules in extra banks. The conditions of each application determine the number of extra banks.

Once the local bank design is validated, you must validate the design for any additional banks. To validate extra bank designs, confirm that the design meets these requirements:

- Compact I/O communication bus expansion cables are used properly.

TIP Compact I/O expansion cables have the same dimensions as the end caps regardless of whether they are installed at the right or left side of the communication bus.

- No more than eight modules are installed on either side of the power supply.
- The power consumption of the modules on each side of the power supply does not exceed the capacity of the power supply for that side.
- Modules are installed such that all power supply distance rating requirements are met.
- End caps are installed properly, as shown in the following graphic.

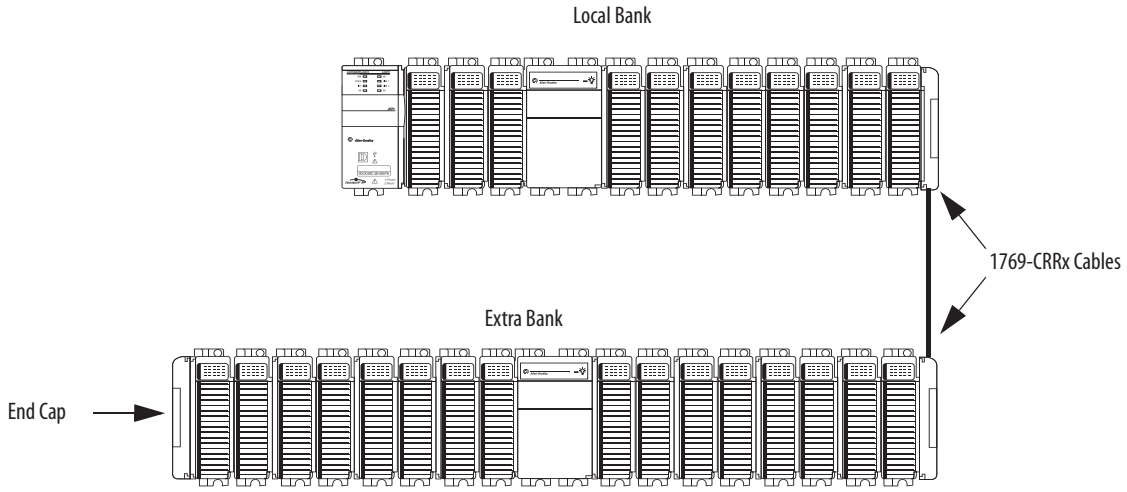

Power Supply Distance Rating

CompactLogix 5370 L3 control systems do not have embedded I/O modules. You begin counting local expansion slots with the first Compact I/O module installed next to the power supply when determining where to install a Compact I/O module and meet its power supply distance rating.

In CompactLogix 5370 L3 control systems, you can install Compact I/O modules to the left or right side of the power supply. You can also use local and extra banks in CompactLogix 5370 L3 control systems, with each allowing the inclusion of Compact I/O modules.

Local Bank

In the local bank, the controller must be the leftmost device in the system and you can only install up to three modules between the controller and the power supply. Therefore, any Compact I/O modules that are installed to the left of the power supply in the local bank, are in a module slot that meets the module's power supply distance rating requirements.

Additional Banks

CompactLogix 5370 L3 control systems also support the use of extra banks for the local expansion modules of the system. Every additional bank requires a 1769 Compact I/O power supply. The bank can be designed with local expansion modules on either side of the power supply.

Most Compact I/O modules have power supply distance rating values that allow you to install them in any slot on either side of the power supply in extra banks. Some Compact I/O modules have power supply distance ratings that affect where you can install them in the CompactLogix 5370 L3 control system.

For example, the 1769-ASCII Compact ASCII and 1769-HSC Compact high-speed counter modules each have a power supply distance rating of four. These modules can be installed in local expansion module slots one through three.

In this case, you must install the 1769-ASCII module and 1769-HSC high-speed counter module with no more three Compact I/O modules between the module and the power, regardless of whether the modules are installed to the left or right of the power supply.

This graphic shows 1769-HSC high-speed counter modules that are installed in a 1769-L36ERM control system that meet the power supply distance rating of the module.

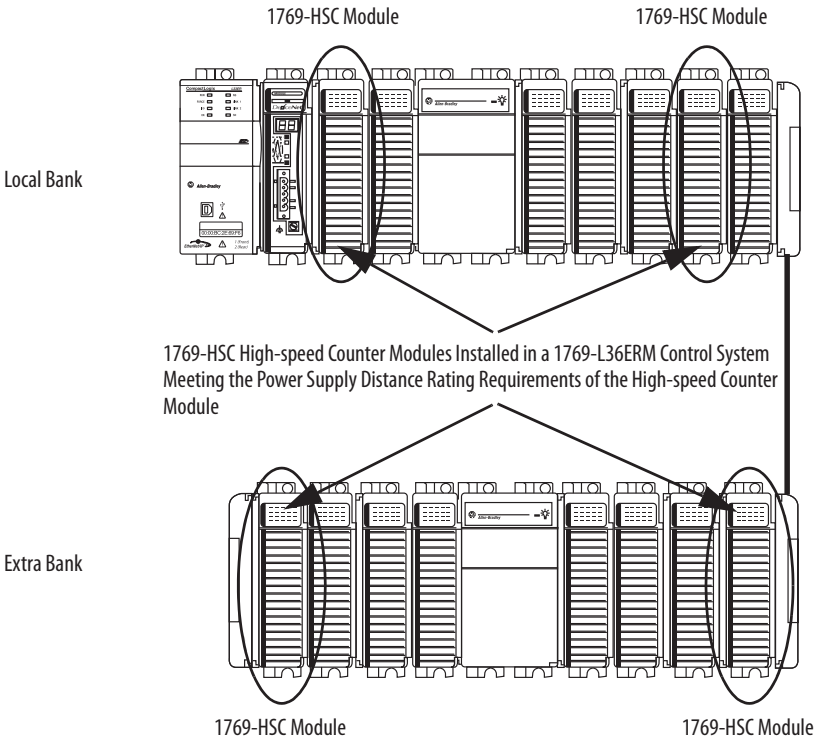

IMPORTANT The previous table shows example systems with 1769-HSC high-speed counter modules in each control system because it has a power supply distance rating of four and cannot be installed as far from the Compact I/O power supply. Most Compact I/O modules have power supply distance ratings that allow you to install them anywhere in the local expansion slots of a CompactLogix 5370 L2 control system.

For more information about the power supply distance rating for a Compact I/O module, see CompactLogix Selection Guide, publication 1769-SG001.

Configure I/O

Complete these steps to add a Compact I/O module to your CompactLogix 5370 L3 control system and configure it.

1. Right-click the 1769 Bus and choose New Module.

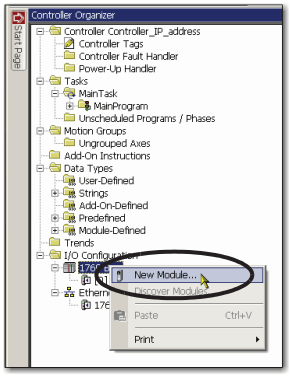

2. Select the desired I/O module and click Create.

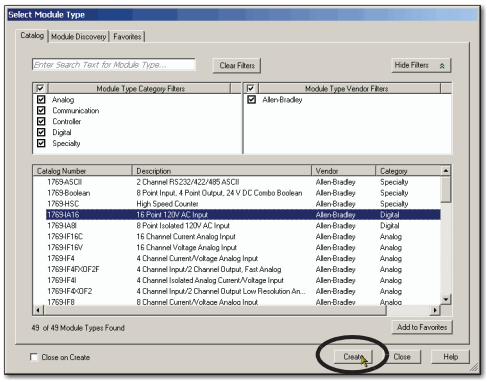

The New Module dialog box appears.

3. Configure the new I/O module as necessary and click OK.

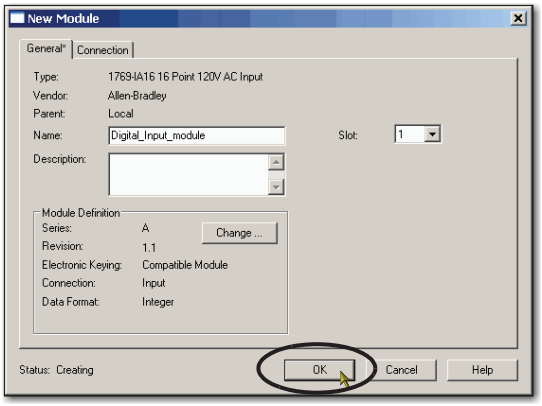

Common Configuration Parameters

While the configuration options vary from module to module, there are some common options you typically configure when using Compact I/O modules in a CompactLogix 5370 L3 control system, as described in Table 32.

Table 32 - Common Configuration Parameters

Configuration Option	Description
Requested packet interval (RPI)	The RPI specifies the interval at which data is transmitted or received over a connection. For 1769 Compact Local I/O modules, data is transmitted to the controller at the RPI. When scanned on the local bus or over an EtherNet/IP network, input modules are scanned at the RPI specified in the module configuration. Typically, you configure an RPI in milliseconds (ms). For I/O modules, the range is 0.5…750 ms. When scanned over a DeviceNet network, distributed input modules are scanned at the rate that the DeviceNet adapter that connects the input modules to the network supports. For example, the scan rate for distributed 1734 POINT I/O over DeviceNet can only occur as quickly as the 1734-ADN DeviceNet adapter can transmit the data.
Module definition	Set of configuration parameters that affect data transmission between the controller and the I/O module. The parameters include the following: • Series - Hardware series of the module. • Revision - Major and minor firmware revision levels that are used on the module. • Electronic Keying - See LOGIX-AT001 for Electronic Keying information. • Connection - Type of connection between the controller writing the configuration and the I/O module, such as Output. • Data format - Type of data that is transferred between the controller and I/O module and what tags are generated when the configuration is complete.
Module Fault on Controller If Connection Fails While in Run Mode	This option determines how the controller is affected if the connection to an I/O module fails in Run mode. You can configure the project so that a connection failure causes a major fault on the controller or not. The default setting is for the option to be enabled, that is, if the connection to an I/O module fails in Run mode, a major fault occurs on the controller.

I/O Connections

A Logix5000 system uses connections to transmit I/O data, as described in Table 33.

Table 33 - I/O Module Connections

Connection	Description
Direct	A direct connection is a real-time, data-transfer link between the controller and an I/O module. The controller maintains and monitors the connection. Any break in the connection, such as a module fault, causes the controller to set fault status bits in the data area that is associated with the module. Typically, analog I/O modules, diagnostic I/O modules, and specialty modules require direct connections.
Rack-optimized	For digital I/O modules, you can select rack-optimized communication. This option is used with distributed I/O modules and the Rack Optimization connection selection is made when configuring the remote adapter. For example, if you want to use a rack-optimized connection with digital I/O modules in a remote 1734 POINT I/O system, you configure the 1734-AENT(R) module to use a connection type of Rack Optimization. A rack-optimized connection consolidates connection usage between the controller and the digital I/O modules in a remote chassis or on one DIN rail. Rather than having individual, direct connections for each I/O module, there is one connection for the entire rack (or DIN rail).

Configure Distributed I/O Modules on an EtherNet/IP Network

Your CompactLogix 5370 L3 control system can use distributed I/O modules on an EtherNet/IP network.

IMPORTANT When adding distributed I/O modules, remember to count the remote Ethernet adapter to remain within the maximum number of EtherNet/IP network nodes limitation for your controller.

The remote I/O modules that are connected to the controller via the Ethernet adapter are not counted toward the maximum Ethernet node limit for the controller.

For more information on node limitations, see Nodes on an EtherNet/IP Network on page 130.

Complete these steps to configure distributed I/O modules on an EtherNet/IP network.

1. Right-click Ethernet and choose New Module.

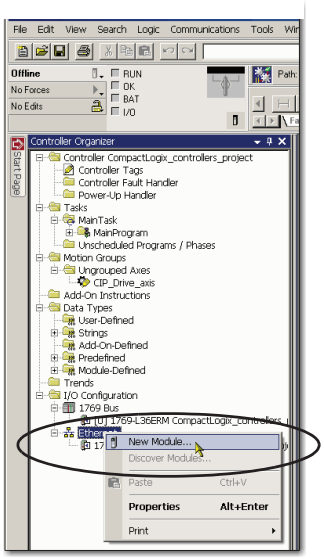

2. Select the desired Ethernet adapter and click Create.

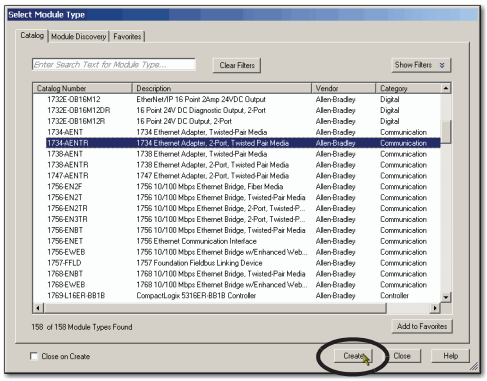

The New Module dialog box appears.

3. Configure the new Ethernet adapter as necessary and click OK.

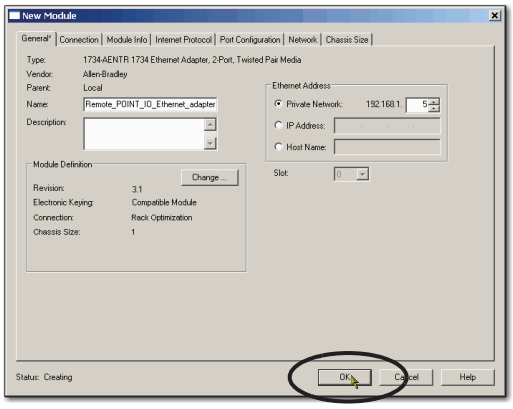

4. Right-click the new adapter and choose New Module.

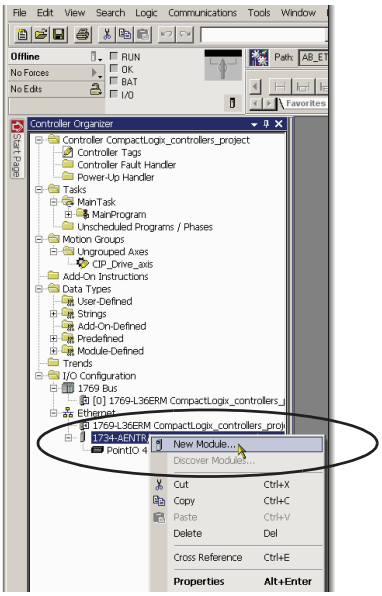

5. Select the desired I/O module and click Create.

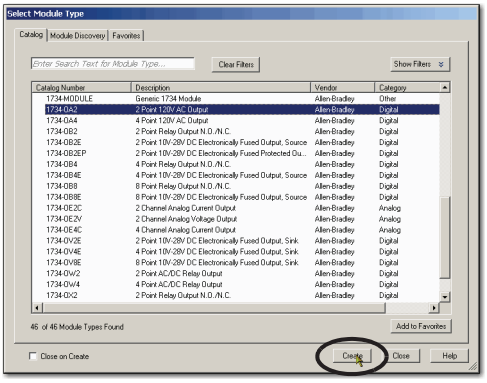

The New Module dialog box appears.

6. Configure the new I/O module as necessary and click OK.

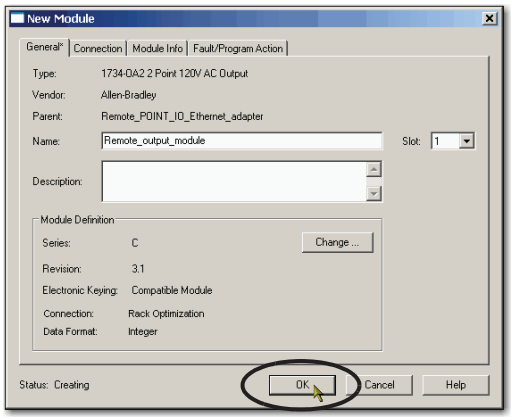

7. Repeat these steps to add the desired distributed I/O modules.

The following graphic is an example of a 1769-L33ERM control system that uses distributed I/O modules over an EtherNet/IP network.

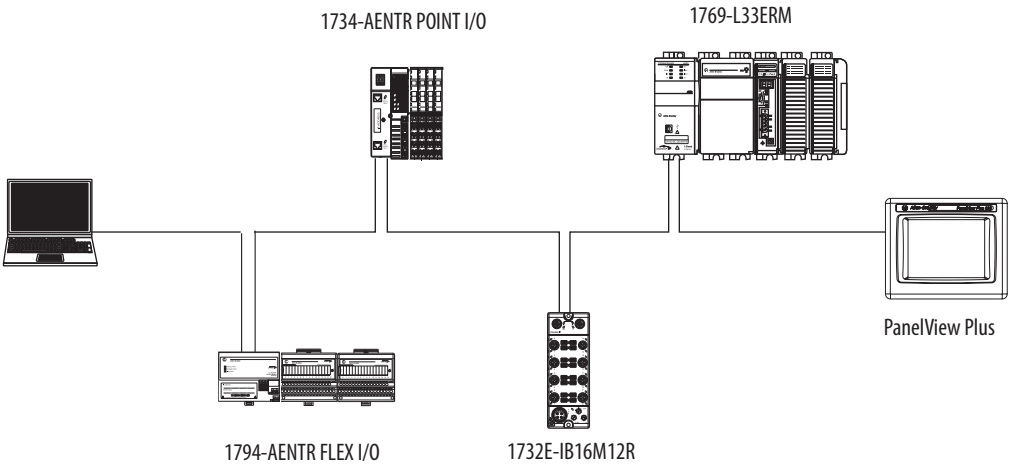

Configure Distributed I/O Modules on a DeviceNet Network

Your CompactLogix 5370 L3 control system can use distributed I/O modules on a DeviceNet network.

Complete these steps to configure distributed I/O modules on a DeviceNet network.

1. If you have not done so, install a 1769-SDN Compact I/O DeviceNet scanner into the local bank of your CompactLogix CompactLogix 5370 L3 control system.
2. Right-click 1769 Bus and choose New Module.

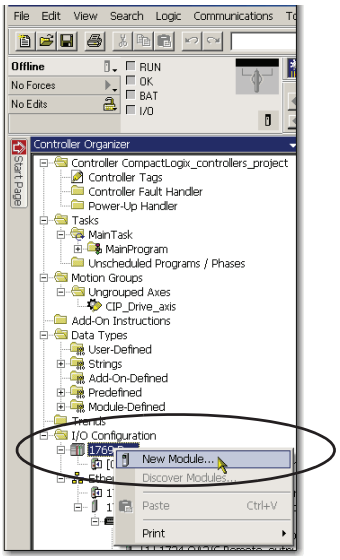

3. Select the 1769-SDN scanner and click Create.

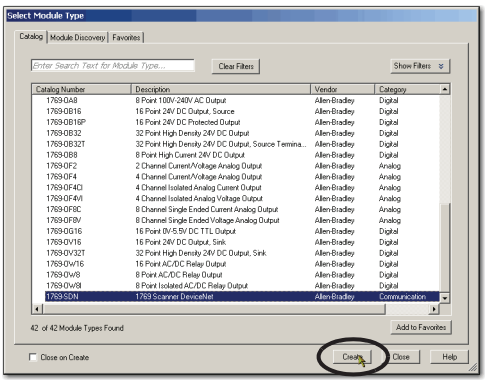

4. Choose a Major Revision and click OK.

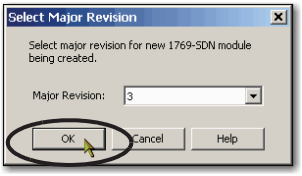

The New Module dialog box appears.

5. Configure the new 1769-SDN scanner as necessary and click OK.

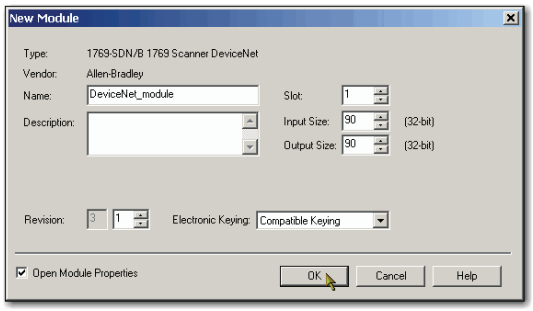

6. Use RSNetWorx for DeviceNet software to define the scan list in the 1769-SDN scanner to communicate data between the devices and the controller through the scanner.

The following graphic is an example of a 1769-L33ERM control system that uses distributed I/O modules on a DeviceNet network.

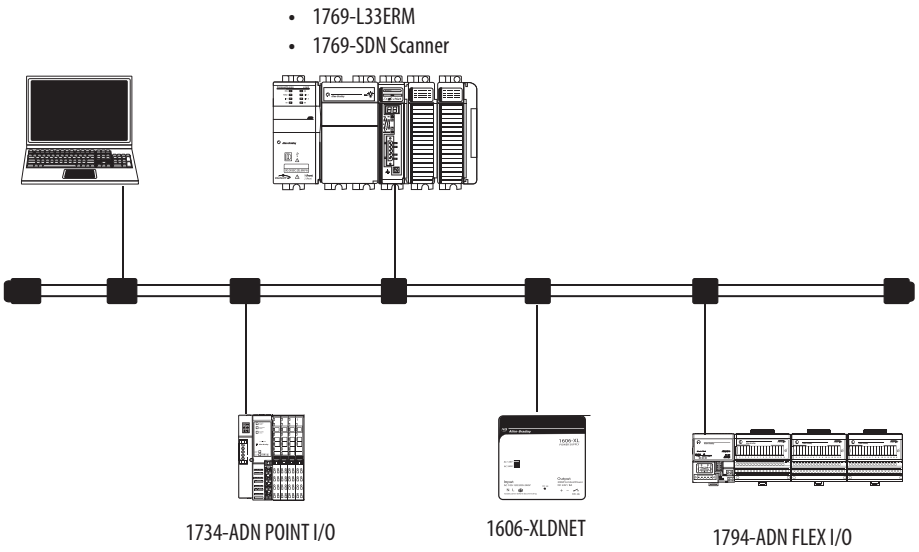

Monitor I/O Modules

With CompactLogix 5370 L3 controllers, you can monitor I/O modules in the following ways:

- Quick View Pane below the Controller Organizer
- Connection tab in the Module Properties dialog box
- Programming logic to monitor fault data so you can act

When a fault occurs on an I/O module, a yellow triangle on the module listing in the Controller Organizer alerts you to the fault.

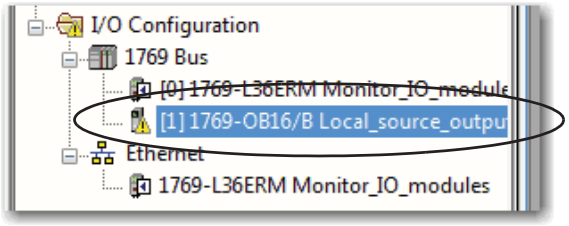

The following graphic shows the **Quick View Pane**, which indicates the type of fault.

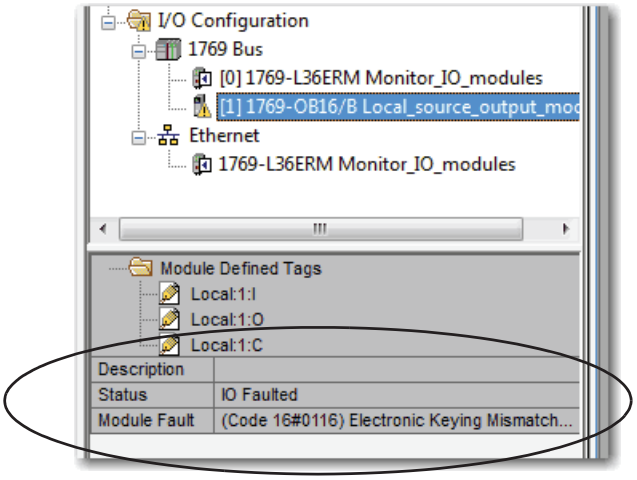

To see the fault description on the **Connection tab** in Module Properties dialog box, complete these steps.

1. In the I/O Configuration, right-click the faulted I/O module and choose Properties.

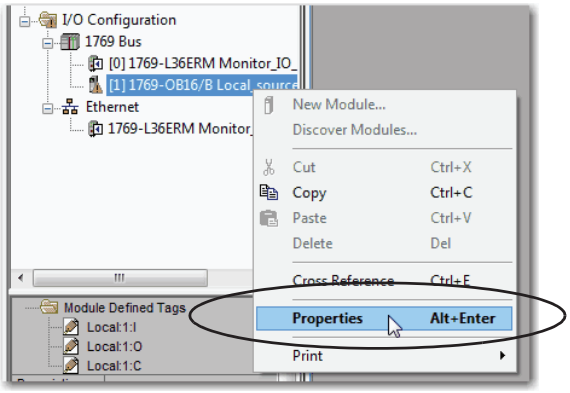

2. Click the Connection tab and use the fault description, in the Module Fault section, to diagnose the issue.

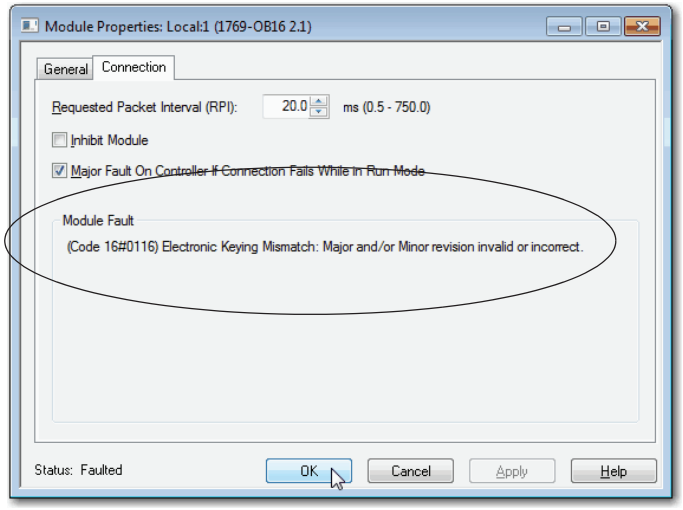

3. Click OK to close the dialog box and remedy the issue.

End Cap Detection and Module Faults

End cap detection is performed through the last module on a 1769 Bus. If that module experiences a fault such that it cannot communicate on the 1769 Bus, the following events occur:

- End cap detection fails
- Controller faults

Notes:

Develop Applications

Topic	Page
Elements of a Control Application	267
Tasks	268
Programs	272
Routines	274
Tags	275
Programming Languages	278
Add-On Instructions	279
Access the Module Object	280
Monitoring Controller Status	281
Monitoring I/O Connections	282
System Overhead Time Slice	285

Elements of a Control Application

A control application is comprised of several elements that require planning for efficient application execution. Application elements include the following:

- Tasks
- Programs
- Routines
- Parameters and Local Tags

Figure 38 - Elements of a Control Program

Control Application

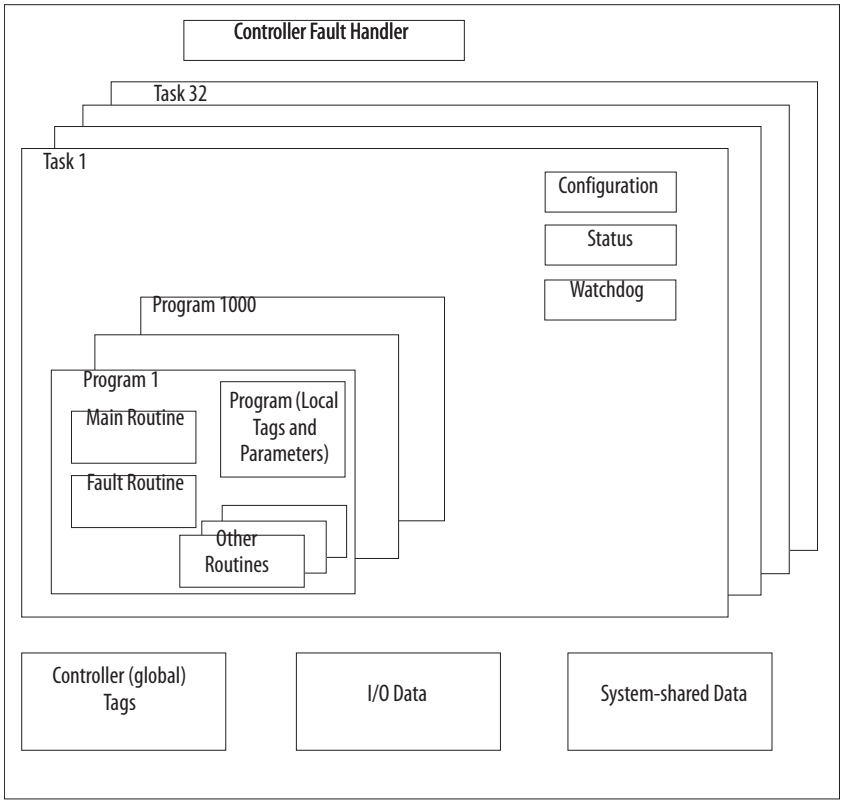

Tasks

A Logix5000 controller lets you use multiple tasks to schedule and prioritize the execution of your programs that are based on criteria. This multitasking allocates the processing time of the controller among the different operations in your application:

- The controller executes only one task at a time.
- One task can interrupt the execution of another task and take control.
- In any given task, multiple programs can be used. However, only one program executes at a time.
- You can display tasks in the Controller or Logical Organizer views, as necessary.

Figure 39 - Task in a Control Application

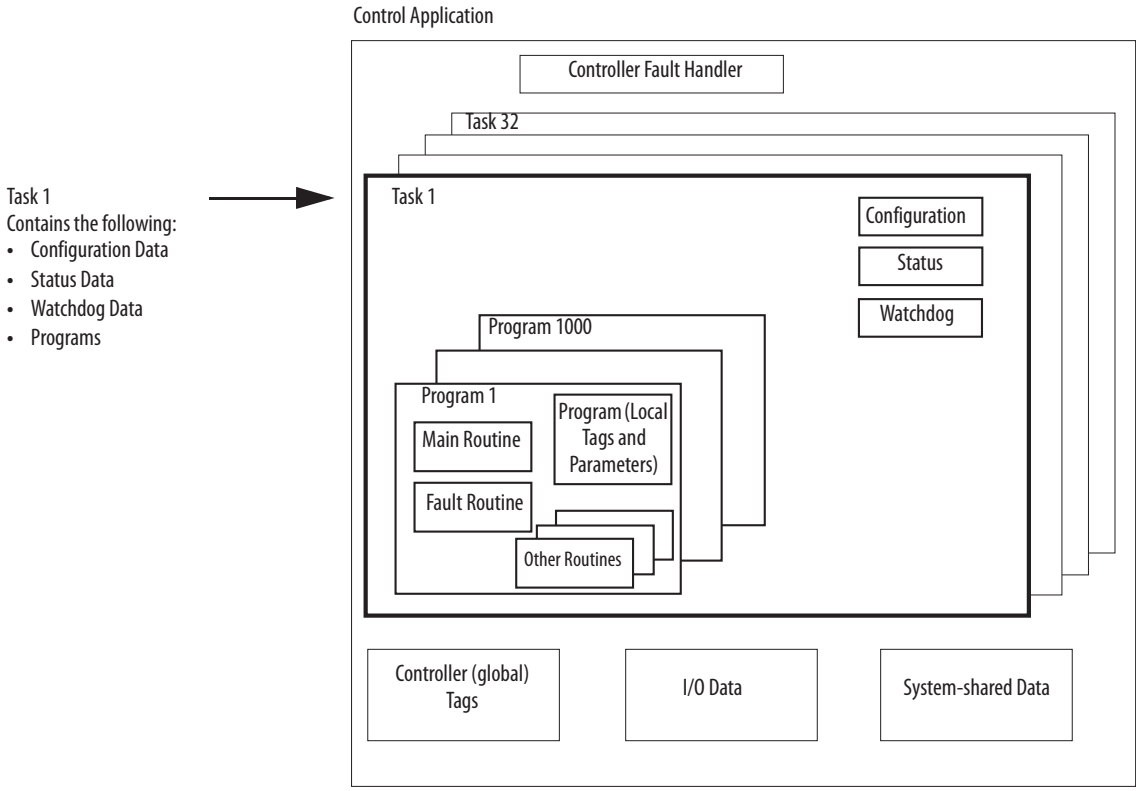

Figure 40 - Tasks in Application

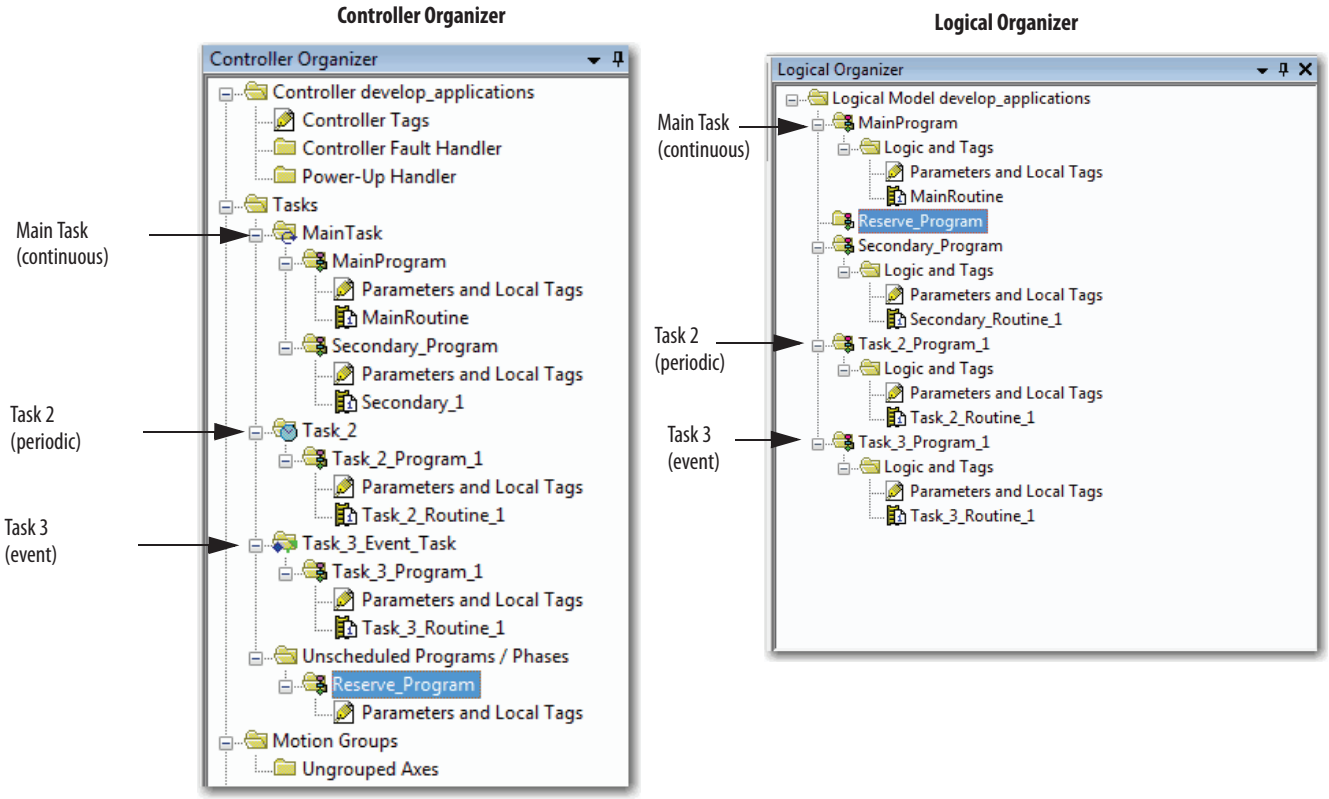

A task provides scheduling and priority information for a set of one or more programs. Configure tasks as continuous, periodic, or event by using the Task Properties dialog box.

Figure 41 - Configuring the Task Type

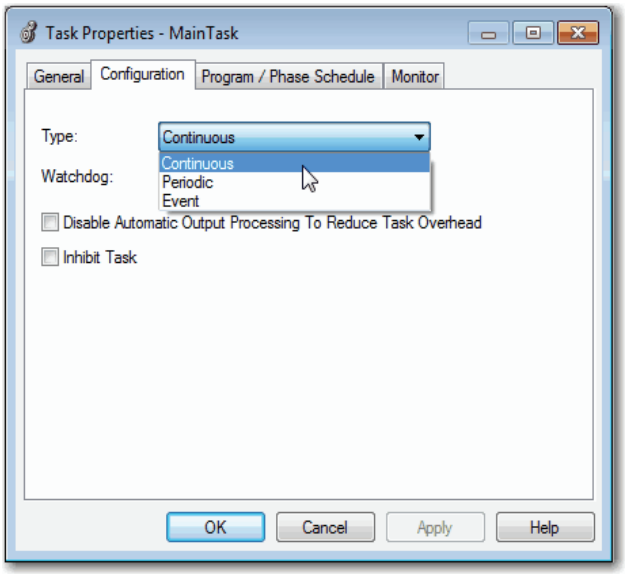

This table explains the types of tasks you can configure.

Table 34 - Task Types and Execution Frequency

Task Type	Task Execution	Description
Continuous	At all times	The continuous task runs in the background. Any CPU time that is not allocated to other operations (such as motion, communication, and other tasks) is used to execute the programs in the continuous task: • The continuous task runs constantly. When the continuous task completes a full scan, it restarts immediately. • A project does not require a continuous task. If used, there can be only one continuous task.
Periodic	• At a set interval, such as every 100 ms • Multiple times in the scan of your other logic	A periodic task performs a function at an interval: • Whenever the time for the periodic task expires, the task interrupts any lower priority tasks, executes once, and returns control to where the previous task left off. • You can configure the time period from 0.1…2,000,000.00 ms. The default is 10 ms. It is also controller and configuration dependent. • The performance of a periodic task depends on the type of Logix5000 controller and on the logic in the task. • The periodic task processes I/O data for CompactLogix, FlexLogix™, DriveLogix™, and SoftLogix™ controllers with the following considerations: – For CompactLogix, FlexLogix, and DriveLogix controllers, operates at priority 6 – For SoftLogix controllers, operates at Windows priority 16 (Idle) – Higher-priority tasks take precedence over the I/O task and can affect processing – Executes at the fastest RPI you have scheduled for the system – Executes for as long as it takes to scan the configured I/O modules
Event	Immediately when an event occurs	An Event task performs a function only when an event (trigger) occurs. The trigger for the Event task can be the following: • A consumed tag trigger • An EVENT instruction • An axis trigger • A motion event trigger • Module input data state change **IMPORTANT**: With Logix Designer application, version 21.00.00 or later, you can use this trigger with 1756 ControlLogix, 1789 SoftLogix, and CompactLogix 5370 L1 applications.

The CompactLogix controller supports up to 32 tasks, only one of which can be continuous.

A task can have up to 1000 separate Programs per task, each with its own executable routines and program-scoped tags. Once a task is triggered (activated), all programs that are assigned to the task execute in the order in which they are grouped. Multiple tasks cannot share Programs and Programs appear only once in the Controller Organizer.

Task Priority

Each task in the controller has a priority level. The operating system uses the priority level to determine which task to execute when multiple tasks are triggered. A higher priority task interrupts any lower priority task. A periodic or event task interrupts the continuous task, which has the lowest priority.

You can configure periodic tasks to execute from the lowest priority of 15 up to the highest priority of 1. Configure the task priority by using the Task Properties dialog box.

Figure 42 - Configure the Task Priority

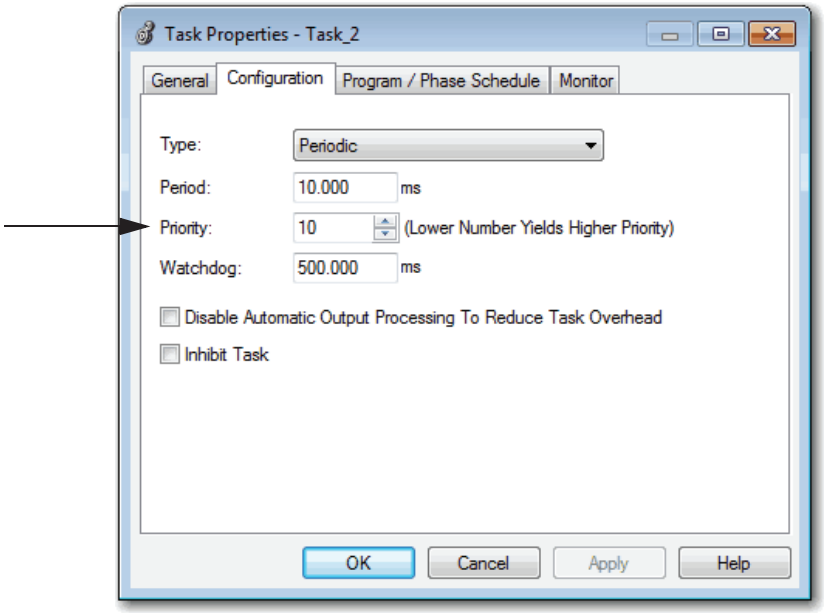

Programs

The controller operating system is a preemptive multitasking system that is in compliance with IEC 1131-3. This system provides the following:

- Programs to group data and logic
- Routines to encapsulate executable code that is written in one programming language

Each program contains the following:

- Local Tags
- Parameters
- A main executable routine
- Other routines
- An optional fault routine

Figure 43 - Program in a Control Application

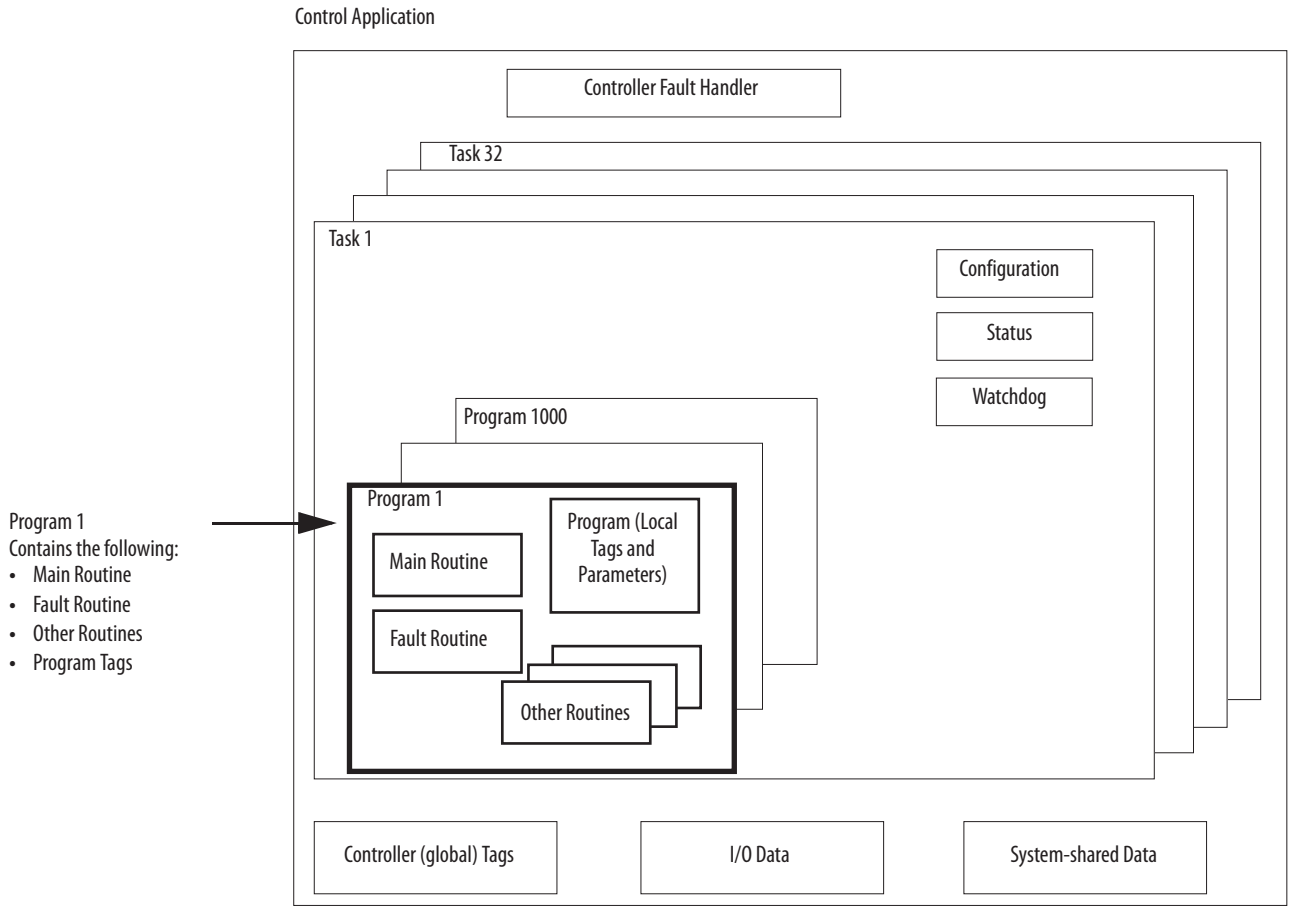

Figure 44 - Programs in Application

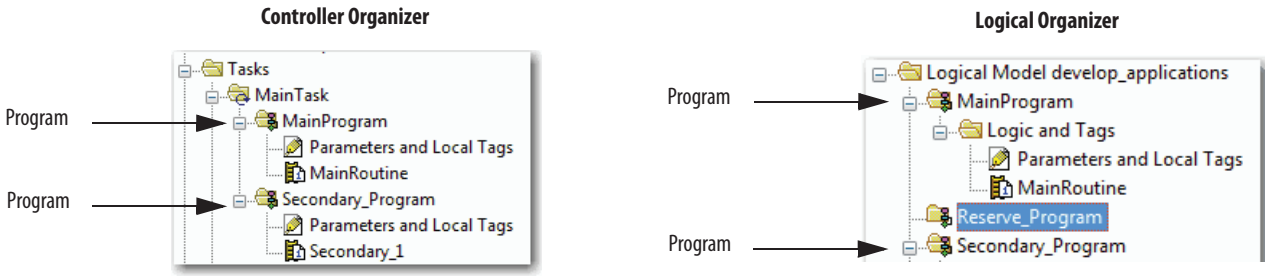

Scheduled and Unscheduled Programs

The scheduled programs in a task execute to completion from first to last. Programs that are not attached to any task show up as unscheduled programs.

Unscheduled programs in a task are downloaded to the controller with the entire project. The controller verifies unscheduled programs but does not execute them.

You must schedule a program in a task before the controller can scan the program. To schedule an unscheduled program, use the Program/Phase Schedule tab of the Task Properties dialog box.

Figure 45 - Scheduling an Unscheduled Program

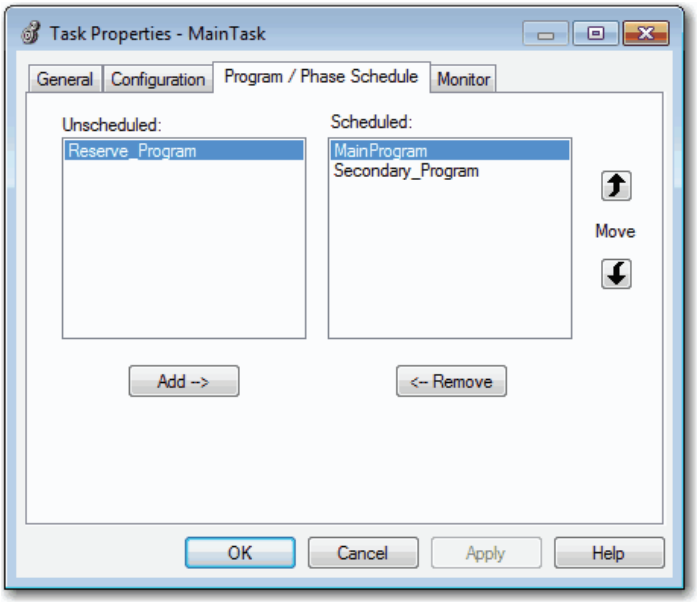

Routines

A routine is a set of logic instructions in one programming language, such as Ladder Diagram (ladder logic). Routines provide the executable code for the project in a controller. A routine is similar to a program file or subroutine in a PLC or SLC™ processor.

Each program has a main routine. This is the first routine to execute when the controller triggers the associated task and calls the associated program. Use logic, such as the Jump to Subroutine (JSR) instruction, to call other routines.

You can also specify an optional program fault routine. The controller executes this routine if it encounters an instruction-execution fault in any of the routines in the associated program.

Figure 46 - Routines in a Control Application

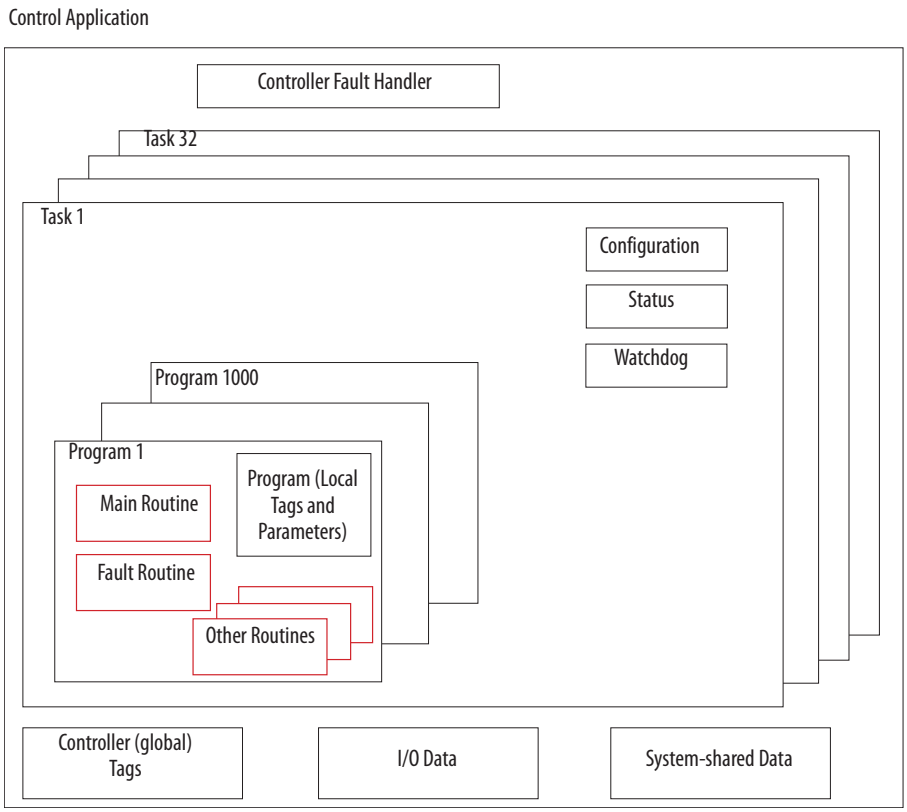

Figure 47 - Routines in Application

Tags

With a Logix5000 controller, you use a tag (alphanumeric name) to address data (variables). In Logix5000 controllers, there is no fixed, numeric format. For example, as shown in the following figure, you can use the tag name **north_tank_mix** instead of a numeric format, such as N7:0.0.

The tag name itself identifies the data. The tag lets you do the following:

- Organize your data to mirror your machinery.
- Document your application as you develop it.

This example shows data tags that are created in the scope of the Main Program of the controller.

Figure 48 - Tags Example

Controller Organizer - Main Program Parameters and Local Tags

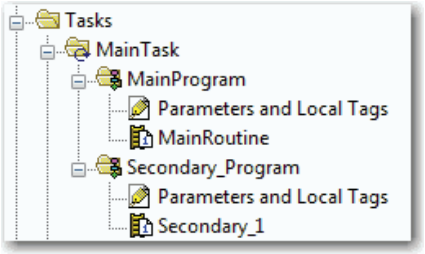

Program Tags Window - Main Program Tags

Scope: MainProgram Show: All Tags Enter Name Filter...

	Name	Usage	Alias For	Base Tag	Data Type	Description	External Access	Constant	Style
	north_tank_mix	Local			BOOL		Read/Write		Decimal
Analog I/O Device	north_tank_pr...	Local			REAL		Read/Write		Float
	north_tank_temp	Local			REAL		Read/Write		Float
	one_shots	Local			DINT		Read/Write		Decimal
	recipe	Local			TANK		Read/Write		
Integer Value	recipe_number	Local			DINT		Read/Write		Decimal
Storage Bit	replace_bit	Local			BOOL		Read/Write		Decimal
Counter	running_hours	Local			COUNTER		Read/Write		
Timer	running_secon...	Local			TIMER		Read/Write		
Digital I/O Device	start	Local			BOOL		Read/Write		Decimal
	stop	Local			BOOL		Read/Write		Decimal

There are several guidelines for creating and configuring parameters and local tags for optimal task and program execution. For more information, see the Logix5000 Controllers and I/O Tag Data Programming Manual, publication 1756-PM004.

Extended Properties

The Extended Properties feature lets you define more information, such as limits, engineering units, or state identifiers, for various components within your controller project.

Component	Extended Properties
Tag	In the Tag Editor, add extended properties to a tag.
User-defined data type	In the Data Type Editor, add extended properties to data types.
Add-On Instructions	In the properties that are associated with the Add-On Instruction definition, add extended properties to Add-On Instructions.

Pass-through behavior is the ability to assign extended properties at a higher level of a structure or Add-On Instruction and have that extended property automatically available for all members. Pass-through behavior is available for descriptions, state identifiers, and engineering units and you can configure it. Configure pass-through behavior on the Project tab of the Controller Properties dialog box. If you choose not to show pass-through properties, only extended properties that have been configured for a given component are displayed.

Pass-through behavior is **not** available for limits. When an instance of a tag is created, if limits are associated with the data type, the instance is copied.

You must know which tags have limits that are associated with them as there is no indication in the tag browser that extended properties are defined for a tag. If, however, you try to use extended properties that have not been defined for a tag, the editors show a visual indication and the routine does not verify.

Access Extended Properties in Logic

You can access limits that are defined on tags by using the .@Min and .@Max syntax:

- You cannot write to extended properties values in logic.
- To use extended tag properties in an Add-On Instruction, you must pass them in as input operands to the Add-On Instruction.
- Alias tags that have extended properties cannot access the extended properties in logic.
- Limits can be configured for input and output parameters in Add-On Instructions. However, limits cannot be defined on an InOut parameter of an Add-On Instruction.
- Limits cannot be accessed inside Add-On Instruction logic. Limits are for use only by HMI applications.

If an array tag is using indirect addressing to access limits in logic, the following conditions apply:

- If the array tag has limits that are configured, the extended properties are applied to any array element that does not explicitly have that particular extended property configured. For example, if the array tag MyArray has Max configured to 100, any element of the array that does not have Max configured inherits the value of 100 when being used in logic. However, it is not visible to you that the value inherited from MyArray is configured in the tag properties.
- At least one array element must have a limit that is configured for indirectly referenced array logic to verify. For example, if MyArray[x].@Max is being used in logic, at least one array element of MyArray[] must have Max extended property that is configured if MyArray has not configured Max.
- Under the following circumstances a data type default value is used:
  - Array is accessed programmatically with indirect reference.
  - Array tag does not have the extended property configured.
  - A member of an array does not have the extended property configured.

  For example, for an array of SINT type, when max limit is called in logic for a member, use the value of 127.

If an array element is directly accessed, the element has to have the extended property defined. If not, verification fails.

Programming Languages

The CompactLogix controller supports these programming languages, online, and offline.

Table 35 - CompactLogix Controller Programming Languages

Language	Is best-used in programs with
Relay ladder	Continuous or parallel execution of multiple operations (not sequenced)
	Boolean or bit-based operations
	Complex logical operations
	Message and communication processing
	Machine interlocking
	Operations that service or maintenance personnel can have to interpret to troubleshoot the machine or process
Function block diagram	Continuous process and drive control
	Loop control
	Calculations in circuit flow
Sequential function chart (SFC)	High-level management of multiple operations
	Repetitive sequence of operations
	Batch process
	Motion control using structured text
	State machine operations
Structured text	Complex mathematical operations
	Specialized array or table loop processing
	ASCII string handling or protocol processing

For information about programming in these languages, see the Logix5000 Controllers Common Procedures Programming Manual, publication 1756-PM001.

Add-On Instructions

You can design and configure sets of commonly used instructions to increase project consistency. Similar to the built-in instructions contained in Logix5000 controllers, these instructions you create are called Add-On Instructions. Add-On Instructions reuse common control algorithms. With them, you can do the following:

- Ease maintenance by animating logic for one instance.
- Protect intellectual property with Source Protection.
- Reduce documentation development time.

You can use Add-On Instructions across multiple projects. You can define your instructions, obtain them from somebody else, or copy them from another project.

This table explains some of the capabilities and advantages of use Add-On Instructions.

Table 36 - Add-On Instruction Capabilities

Capability	Description
Save Time	With Add-On Instructions, you can combine your most commonly used logic into sets of reusable instructions. You save time when you create instructions for your projects and share them with others. Add-On Instructions increase project consistency because commonly used algorithms all work in the same manner, regardless of who implements the project.
Use Standard Editors	You create Add-On Instructions by using one of three editors: • Relay Ladder • Function Block Diagram • Structured Text Once you have created instructions, you can use them in any editor.
Export Add-On Instructions	You can export Add-On Instructions to other projects and copy and paste them from one project to another. Give each instruction a unique name so that you don't accidentally overwrite another instruction of the same name.
Use Context Views	Context views let you visualize the logic of an instruction for an instant, which simplifies online troubleshooting of your Add-On Instructions. Each instruction contains a revision, a change history, and an auto-generated help page.
Create Custom Help	When you create an instruction, you enter information for the description fields in dialogs, information that becomes what is known as Custom Help. Custom Help makes it easier for you to get the help you need when implementing the instructions.
Apply Source Protection	As the creator of Add-On Instructions, you can limit users of your instructions to read-only access, or you can bar access to the internal logic or local parameters that are used by the instructions. This source protection lets you stop unwanted changes to your instructions and protects your intellectual property.

Once defined in a project, Add-On Instructions behave similarly to the built-in instructions in Logix5000 controllers. They appear on the instruction tool bar for easy access, as do internal instructions.

Figure 49 - Add-On Instructions

Controller Organizer

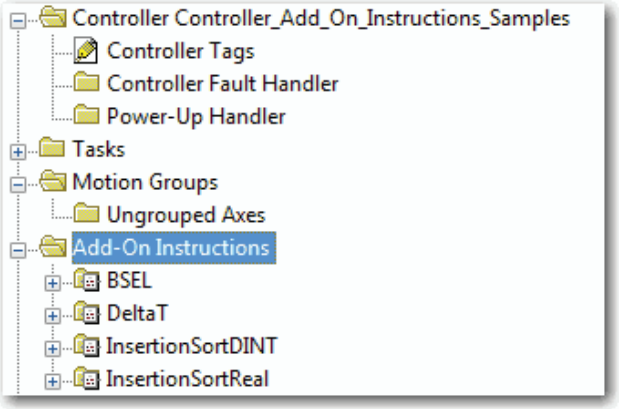

Instruction Toolbar

Access the Module Object

The MODULE object provides status information about a module. To select a particular module object, set the Object Name operand of the GSV/SSV instruction to the module name. The specified module must be present in the I/O Configuration section of the controller organizer and must have a device name.

Create the Add-On Instruction

With Logix Designer application, version 24.00.00 and later, you can access a MODULE object directly from an Add-On Instruction. Previously, you could access the MODULE object data but not from within an Add-On Instruction.

You must create a Module Reference parameter when you define the Add-On Instruction to access the MODULE object data. A Module Reference parameter is an InOut parameter of the MODULE data type that points to the MODULE Object of a hardware module. You can use module reference parameters in both Add-On Instruction logic and program logic.

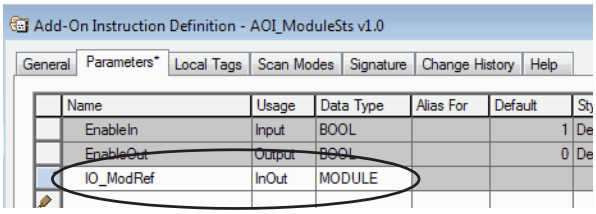

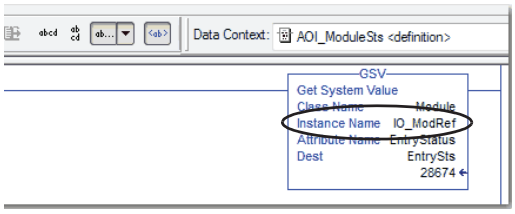

For more information on the Module Reference parameter, see the Logix5000 Controllers Add-On Instructions Programming Manual, publication 1756-PM010 and the Logix Designer application online help.

The MODULE object uses the following attributes to provide status information:

- EntryStatus
- FaultCode
- FaultInfo
- FWSupervisorStatus
- ForceStatus
- Instance
- LEDStatus
- Mode
- Path

The Path attribute is available with Logix Designer application, version 24.00.00 and later. This attribute provides a communication path to the module.

For more information on the attributes available in the MODULE object, see the Logix 5000 Controllers General Instructions Reference Manual, publication 1756-RM003.

Monitoring Controller Status

The CompactLogix controller uses Get System Value (GSV) and Set System Value (SSV) instructions to get and set (change) controller data. The controller stores system data in objects. There is no status file, as in the PLC-5® processor.

The GSV instruction retrieves the specified information and places it in the destination. The SSV instruction sets the specified attribute with data from the source. The instructions are available from the Input/Output tab of the Instruction tool bar.

Figure 50 - GSV and SSV Instructions for Monitoring

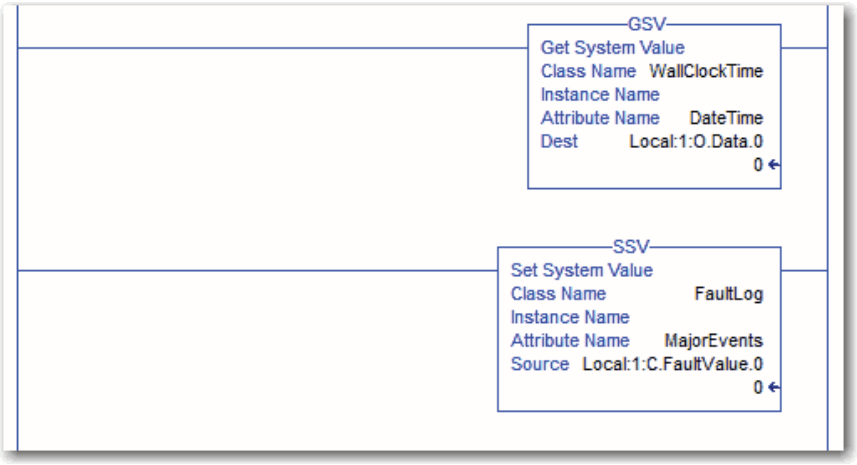

When you add a GSV/SSV instruction to the program, the object classes, object names, and attribute names for each instruction are displayed. For the GSV instruction, you can get values for the available attributes. For the SSV instruction, only those attributes you are allowed to set are displayed.

Some object types appear repeatedly, so you have to specify the object name. For example, there can be several tasks in your application. Each task has its own Task object that you access by the task name.

There are several objects and attributes that you can use the GSV and SSV instructions to monitor and set the system. For more information about GSV instructions, SSV instructions, objects, and attributes see the Logix5000 Controllers General Instructions Reference Manual, publication 1756-RM003.

Monitoring I/O Connections

If communication with a device in the I/O configuration of the controller does not occur in an application-specific period, the communication times out and the controller produces warnings.

The minimum timeout period that, once expired without communication, causes a timeout is 100 ms. The timeout period can be greater, depending on the RPI of the application. For example, if your application uses the default RPI = 20 ms, the timeout period is 160 ms.

For more information on how to determine the time for your application, see Rockwell Automation Knowledgebase Tech Note 38535. The document is available at http://www.rockwellautomation.com/knowledgebase/.

When a timeout does occur, the controller produces these warnings:

- An I/O fault status code is indicated on the status display of the CompactLogix 5370 controller.
- The I/O status indicator on the front of the CompactLogix 5370 controller flashes green.
- A ⚠ shows over the I/O configuration folder and over the devices that have timed out.
- A module fault code is produced, which you can access via the following:
  - The Module Properties dialog box
  - A GSV instruction

For more information about I/O faults, see the Major, Minor, and I/O Faults Programming Manual, publication 1756-PM014.

Determine if I/O Communication has Timed Out

This example can be used with the CompactLogix 5370 controllers:

- The GSV instruction gets the status of the I/O status indicator (via the LEDStatus attribute of the Module object) and stores it in the IO_LED tag.
- IO_LED is a DINT tag that stores the status of the I/O status indicator or status display on the front of the controller.
- If IO_LED equals 2, then at least one I/O connection has been lost and the Fault_Alert is set.

Figure 51 - GSV Used to Identify I/O Timeout

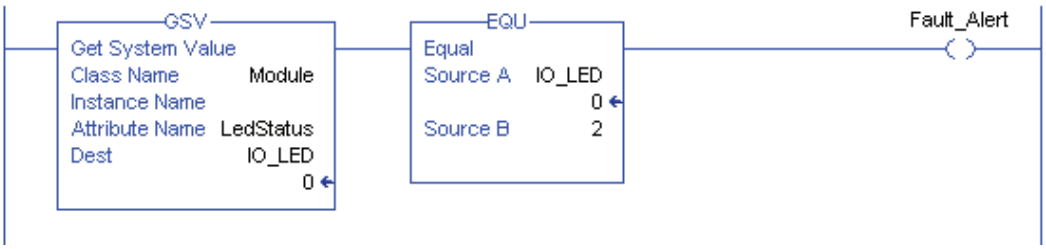

For more information about attributes available with the Module object, see the Logix5000 Controllers General Instructions Reference Manual, publication 1756-RM003.

Determine if I/O Communication to a Specific I/O Module has Timed Out

If communication times out with a device (module) in the I/O configuration of the controller, the controller produces a fault code and fault information for the module. You can use GSV instructions to get fault code and information via the FaultCode and FaultInfo attributes of the Module object.

For more information about attributes available with the Module object, see the Logix5000 Controllers General Instructions Reference Manual, publication 1756-RM003.

Interrupt the Execution of Logic and Execute the Fault Handler

Depending on your application, you can want an I/O connection error to cause the Controller Fault Handler to execute. To do so, set the module property that causes a major fault to result from an I/O connection error. The major fault causes the execution of the Controller Fault Handler.

First, develop a routine in the Controller Fault Handler that can respond to I/O connection faults. In the Module Properties dialog box of the I/O module or parent communication module, check Major Fault On Controller If Connection Fails While in Run Mode.

Figure 52 - I/O Connection Fault Causes Major Fault

I/O Module Properties

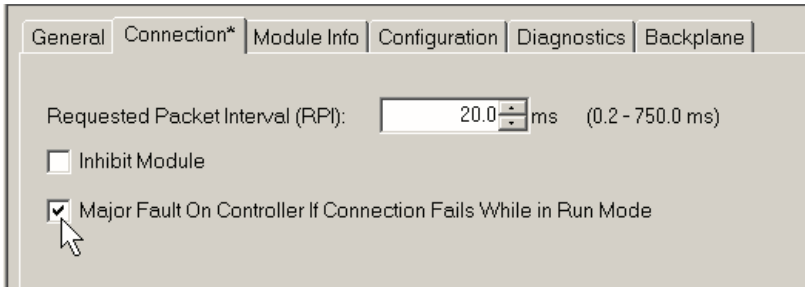

Parent Communication Module Properties

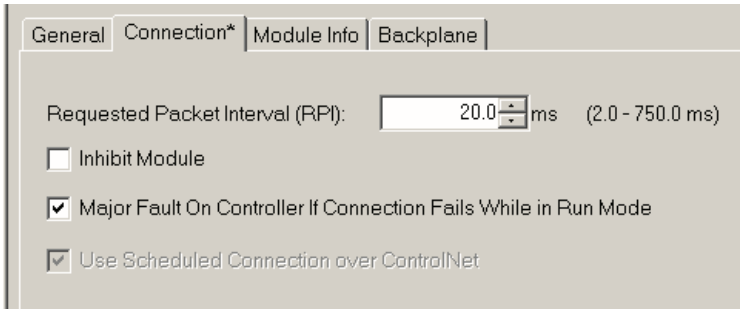

For more information about programming the Controller Fault Handler, see the Major, Minor, and I/O Faults Programming Manual, publication 1756-PM014.

System Overhead Time Slice

The controller communicates with other devices at a specified rate (scheduled) or when there is processing time available to service the communication.

The system overhead time slice specifies the percentage of time a controller devotes to service communication. If you have a continuous task, the System Overhead Time Slice entered in the Advanced tab of the Controller Properties dialog box specifies continuous task/service communication ratio. However, if there is no continuous task, the overhead time slice has no effect.

The table shows the ratio between the continuous task and service communication at various system overhead time slices.

Table 37 - Ratio between Continuous Task and Service Communication

At this time slice	The continuous task runs	Service communication occurs for up to
10%	9 ms	1 ms
20%	4 ms	1 ms
25%	3 ms	1 ms
33%	2 ms	1 ms
50%	1 ms	1 ms
66%	1 ms	2 ms
75%	1 ms	3 ms
80%	1 ms	4 ms
90%	1 ms	9 ms

As shown in Table 37, if the system overhead time slice is less than or equal to 50%, the duration stays fixed at 1 ms. The same applies for 66% and higher, except there are multiple 1 ms intervals. For example, at 66% there are two 1 ms intervals of consecutive time and at 90% there are nine 1 ms intervals of consecutive time.

Configure the System Overhead Time Slice

To configure the system overhead time slice, perform this procedure.

1. In the Controller Organizer, right-click the controller and choose Properties.

   The Controller Properties dialog box appears.
2. Click the Advanced tab.
3. Enter a numeric value in the System Overhead Time Slice box.
4. Use Run Continuous Task (default) or Reserve for System Tasks.
   - Click Run Continue Task when there is no communication or background tasks to process; controller immediately returns to the continuous task.
   - Click Reserve for System Task to allocates the entire 1 ms of the system overhead time slice whether the controller has communication or background tasks to perform before returning back to the continuous task. This lets you simulate a communication load on the controller during design and programming before HMIs, controller to controller messaging, and so forth, are configured.
5. Click OK.

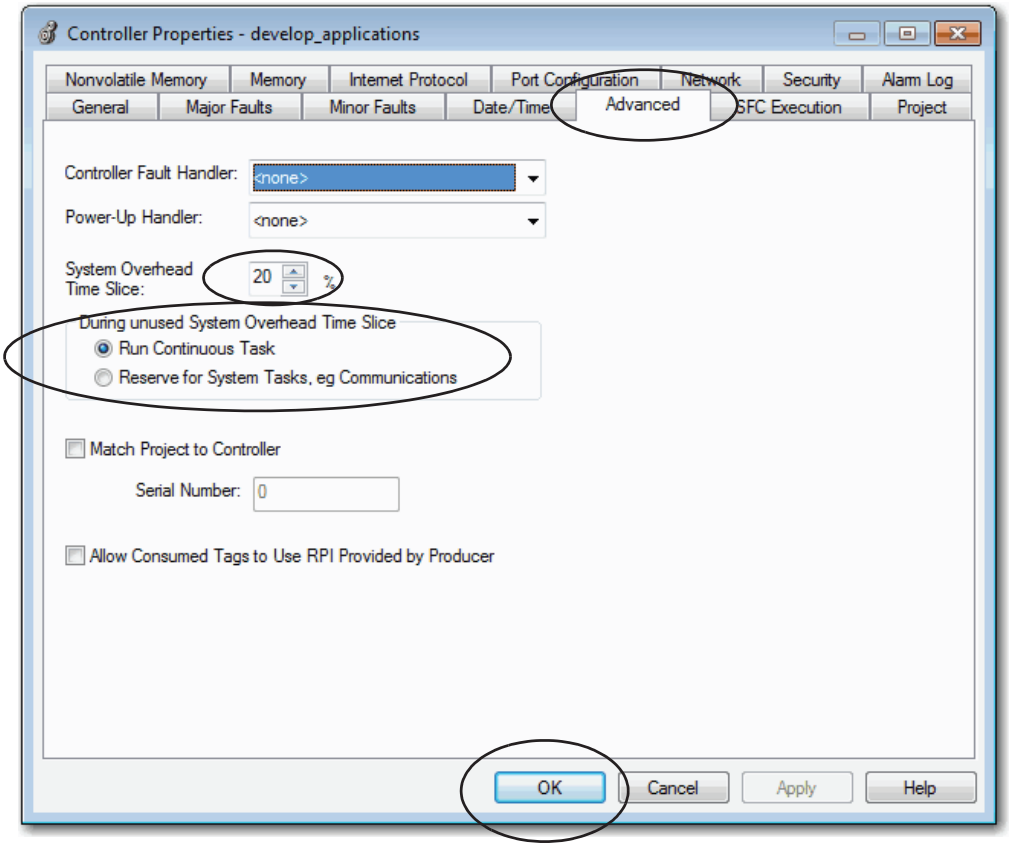

Sample Controller Projects

The application includes sample projects that you can copy and modify to fit your application. To access the sample projects, complete these steps.

1. From the File menu, choose Open.

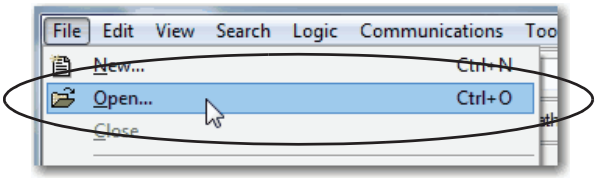

2. Browse to the sample projects list and select a sample project.
3. Click Open.

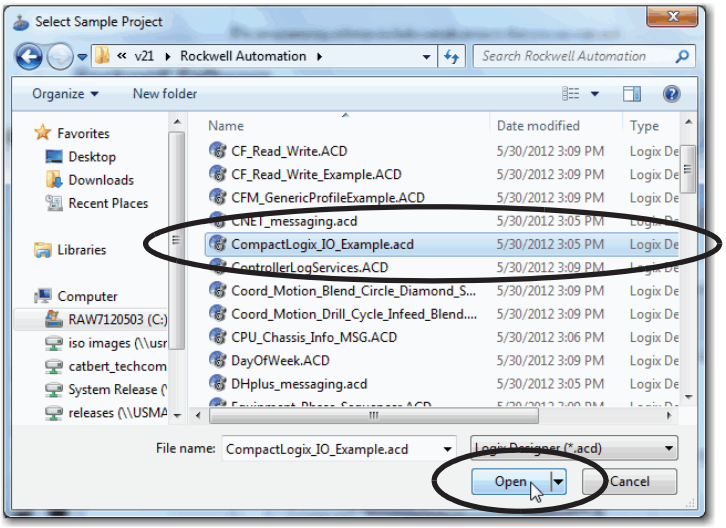

Notes:

Develop Integrated Motion over an EtherNet/IP Network Application

Topic	Page
Motion Axes Support	290
Maximum Number of Position Loop-configured Drives	291
Time Synchronization	292
Configure Integrated Motion on the EtherNet/IP Network	293
Scalability in Applications Using Integrated Motion on EtherNet/IP Networks	297

Some of the CompactLogix 5370 controllers support Integrated Motion over an EtherNet/IP network, a motion solution on a standard, unmodified EtherNet/IP network with simple design or configuration that is compared to traditional motion applications.

IMPORTANT The following CompactLogix 5370 controllers support Integrated Motion over an EtherNet/IP network:

- 1769-L18ERM-BB1B controller
- 1769-L27ERM-QBFC1B controller
- 1769-L30ERM controller
- 1769-L33ERM controller
- 1769-L36ERM controller

Integrated Motion on EtherNet/IP applications use the following:

- Standard EtherNet/IP network
- High performance drives, including the following:
  - Kinetix 350 drives
  - Kinetix 5500 drives
  - Kinetix 6500 drives
  - PowerFlex 755 drives
- Standard infrastructure components
- Programming software

For a complete description of how to use a CompactLogix 5370 controller in an application that uses Integrated Motion over an EtherNet/IP network, see the Integrated Motion on the EtherNet/IP Network Configuration and Startup User Manual, publication MOTION-UM003.

Motion Axes Support

The 1769-L18ERM-BB1B, 1769-L27ERM-QBFC1B, 1769-L30ERM, 1769-L33ERM, and 1769-L36ERM controllers support these axes:

- AXIS_VIRTUAL
- AXIS_CIP_DRIVE

AXIS_VIRTUAL Axis

The AXIS_VIRTUAL axis is an internal axis representation that is not associated with any physical drives. That is, you can configure the axis but it does not cause any physical motion in your system.

AXIS_CIP_DRIVE Axis

The AXIS_CIP_DRIVE axis is a motion axis that is used with physical drives to cause physical motion in your system as determined by your application.

Configuration Types

When adding an axis to your project, you must associate the axis to a drive. Among other configuration parameters, you must select a configuration type. The axis configuration type is also considered the drive configuration type.

For example, an AXIS_CIP_DRIVE axis can use a Position Loop configuration and be associated with a Kinetix 350 drive. The axis is considered a Position Loop-configured axis and the associated drive is considered a Position Loop-configured drive.

The following drives support these configuration types:

- Kinetix 350, Kinetix 5500, and Kinetix 6500 drives
  - Position loop
  - Velocity loop
  - Torque loop
- PowerFlex 755 drive
  - Position loop
  - Velocity loop
  - Torque loop
  - Frequency control

Maximum Number of Position Loop-configured Drives

The CompactLogix 5370 controllers support a maximum number of EtherNet/IP nodes in a project. Any device added to the local Ethernet node in the I/O configuration is counted toward the node limitation of the controller. For more information, see Nodes on an EtherNet/IP Network on page 130.

Drives are counted among the number of nodes in the I/O Configuration section of the Studio 5000 environment. If you use the maximum number of drives that a 1769-L18ERM-BB1B, 1769-L27ERM-QBFC1B, 1769-L30ERM, 1769-L33ERM, or 1769-L36ERM controller supports in one system, you cannot add other EtherNet/IP devices to that project.

Position Loop-configured Drive Limits

Among the maximum number drives supported by the controllers, there is a maximum number of Position Loop-configured drives that are supported in the project for the controller.

For example, the 1769-L30ERM controller supports a maximum of four Position Loop-configured drives.

Table 38 lists motion-related specification information for the controllers that support Integrated Motion over an EtherNet/IP network.

Table 38 - CompactLogix 5370 Controllers Supporting Integrated Motion on the EtherNet/IP Network

Controller Type	Drive Types Supported	Number of Drives Supported, max	Number of Position Loop-configured Drives Supported, max
1769-L18ERM-BB1B	Kinetix 350 Kinetix 6500 PowerFlex 755	8	2
1769-L27ERM-QBFC1B		16	4
1769-L30ERM		16	4
1769-L33ERM		32	8
1769-L36ERM		48	16

If your solution requires more than 16 Position Loop-configured drives, consider using the ControlLogix platform. The ControlLogix platform enables up to 100 Position Loop-configured drives.

Time Synchronization

Integrated Motion over an EtherNet/IP network requires Time Synchronization, also known as CIP Sync. CIP Sync provides accurate real-time (real-world time) or Coordinated Universal Time (UTC) synchronization of CompactLogix 5370 controllers and devices that are connected over an EtherNet/IP network.

CIP Sync is a time-synchronization protocol that can be applied to various applications. This chapter focuses on using the protocol in applications with Integrated Motion over an EtherNet/IP network.

In a CompactLogix system, the following devices are CIP Sync-capable:

- All CompactLogix 5370 controllers - Required

IMPORTANT While all CompactLogix 5370 controllers are CIP Sync-capable, not all controllers support Integrated Motion over an EtherNet/IP network.

A controller must be CIP Sync-capable and synchronized with other devices on the EtherNet/IP network to support Integrated Motion over an EtherNet/IP network. However, the condition of being CIP Sync-capable does not exclusively qualify a CompactLogix 5370 controller to support Integrated Motion over an EtherNet/IP network.

Table 38 on page 291 lists the CompactLogix 5370 controllers that support Integrated Motion over an EtherNet/IP network.

All controllers and communication modules must have time synchronization enabled to participate in CIP Sync.

CIP Sync requires that devices in the system function in the following roles:

- Grandmaster, also known as the coordinated system time (CST) master - Sets time for entire system and passes the time to a Master
- Master - Sets time for its backplane
- Slave - Uses time set by Master

Configure Integrated Motion on the EtherNet/IP Network

To use Integrated Motion on the EtherNet/IP network, complete these steps.

IMPORTANT These steps show a 1769-L36ERM controller. The same steps apply to other CompactLogix 5370 controllers that support Integrated Motion over an EtherNet/IP network with slight variations in screens.

1. Enable Time Synchronization.
2. Add a Drive.

IMPORTANT This section assumes that you have previously created a project for your 1769-L36ERM controller. If you have not, do so before continuing.

Enable Time Synchronization

Configuring Integrated Motion on the EtherNet/IP network begins with enabling time synchronization in a CompactLogix 5370 controller.

To enable Time Synchronization on a CompactLogix 5370 controller, complete these steps.

1. In the Controller Organizer, right-click your controller and choose Properties.

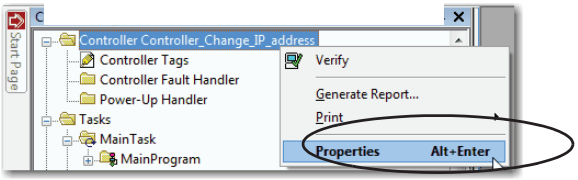

   The Controller Properties dialog box appears.

2. Click the Date/Time tab.
3. Click Enable Time Synchronization.
4. Click OK.

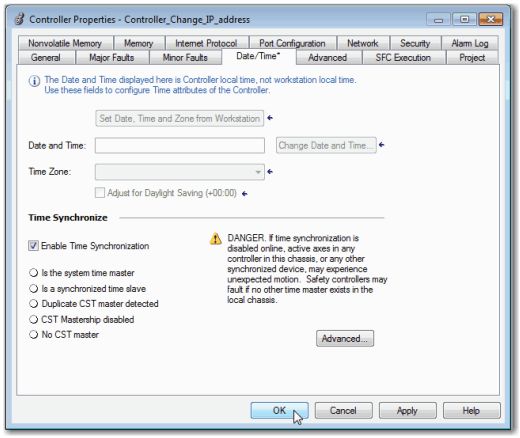

Add a Drive

You can only use these drives in an application that uses Integrated Motion over an EtherNet/IP network:

- Kinetix 350 drive
- Kinetix 6500 drive
- PowerFlex 755 AC drive

IMPORTANT These steps show a Kinetix 350 drive in a 1769-L36ERM control system. The same steps apply to other CompactLogix 5370 controllers that support Integrated Motion over an EtherNet/IP network with slight variations in screens.

1. In the I/O configuration tree, right-click the Ethernet network and choose New Module.

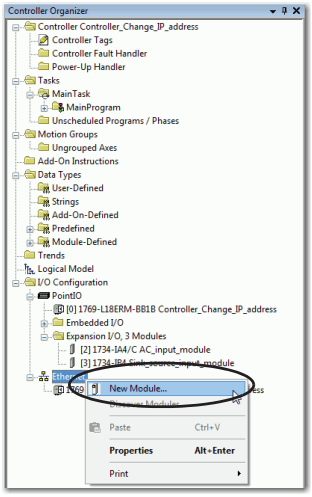

The Select Module Type dialog box appears.

2. Select the desired drive and click Create.

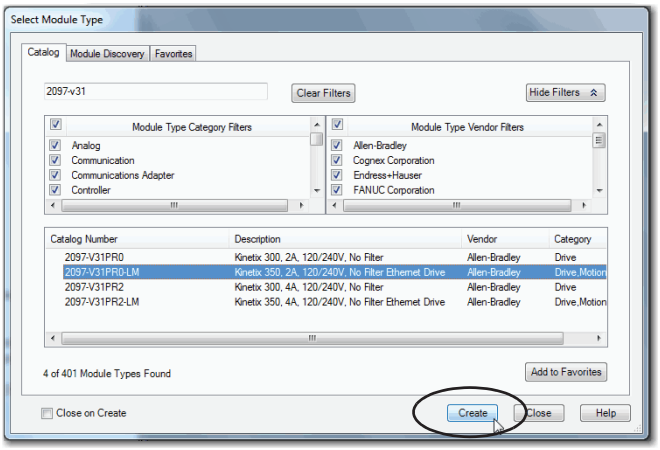

The New Module dialog box appears.

3. Type a name for the module.
4. Type a description, if desired.
5. Assign an EtherNet/IP address.

   For information on setting the IP addresses, see the publications for each drive type that is listed on page 12.

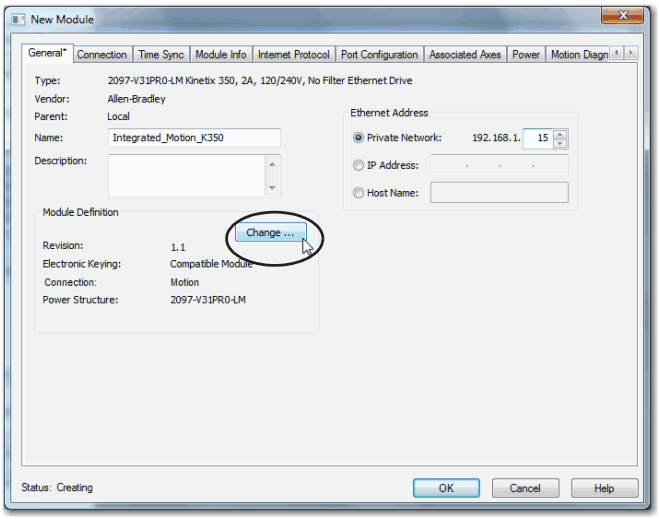

6. If you must change the configuration for any of the following parameters, click Change in the Module Definition area:
   - Revision
   - Electronic Keying
   - Connection
   - Power Structure
   - Verify Power Rating on Connection

   The Module dialog box appears.

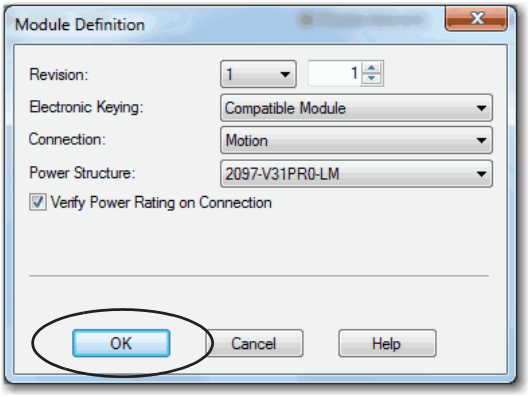

7. Make the desired changes and click OK.
8. Click OK to create the drive in your project.
9. Add other components that your project requires.

Scalability in Applications Using Integrated Motion on EtherNet/IP Networks

CompactLogix 5370 controllers offer varying levels of flexibility and scalability to operate in control systems using Integrated Motion on EtherNet/IP networks.

1769-L30ERM, 1769-L33ERM, and 1769-L36ERM Controllers

You can use the following controllers in control systems that require simpler configuration and complex configuration of Integrated Motion on EtherNet/IP networks parameters:

- 1769-L30ERM
- 1769-L33ERM
- 1769-L36ERM

Control Systems Requiring Simple Configuration

Relatively simple control systems that use Integrated Motion over an EtherNet/IP networks often include unmanaged switches, such as a Stratix 2000™ switch, and Kinetix 350 drives, as shown in this example.

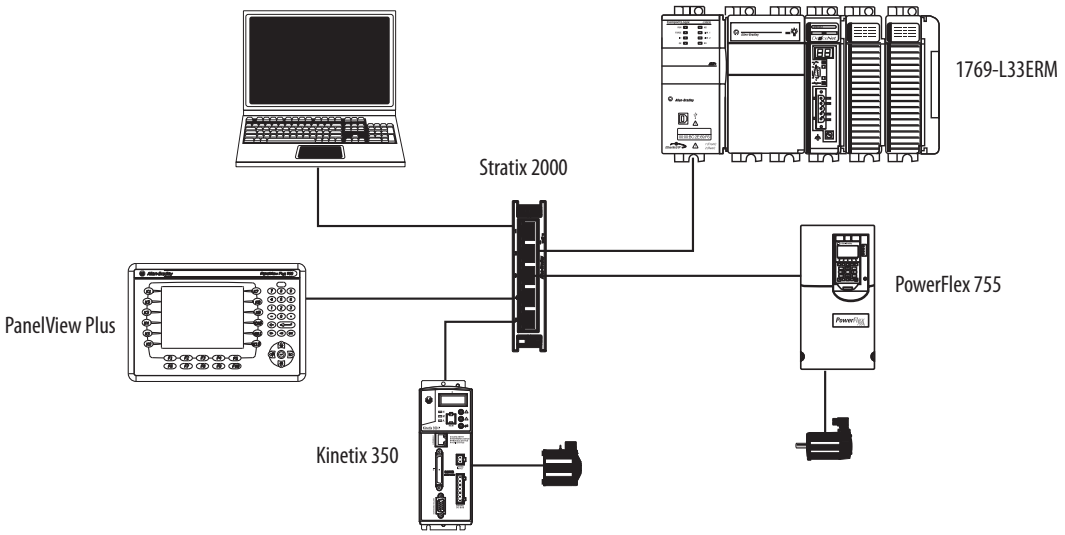

Control Systems Requiring Complex Configuration

Complex control systems that use Integrated Motion over an EtherNet/IP network often include managed switches, such as a Stratix 6000 switch, and Kinetix 6500 and PowerFlex 755 drives, as shown in this example.

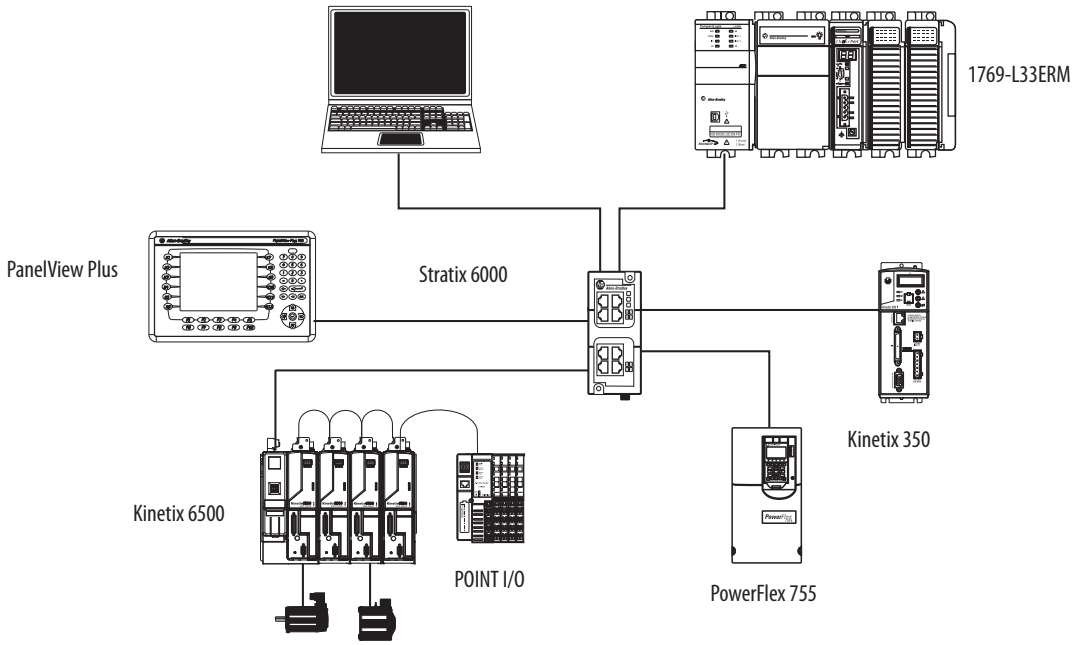

1769-L18ERM-BB1B Controller

The 1769-L18ERM-BB1B controller is typically used in control systems that require simpler configuration regarding using Integrated Motion over an EtherNet/IP network.

The simpler control system often includes unmanaged switches, such a Stratix 2000 switch, and Kinetix 350 drives, as shown in this example.

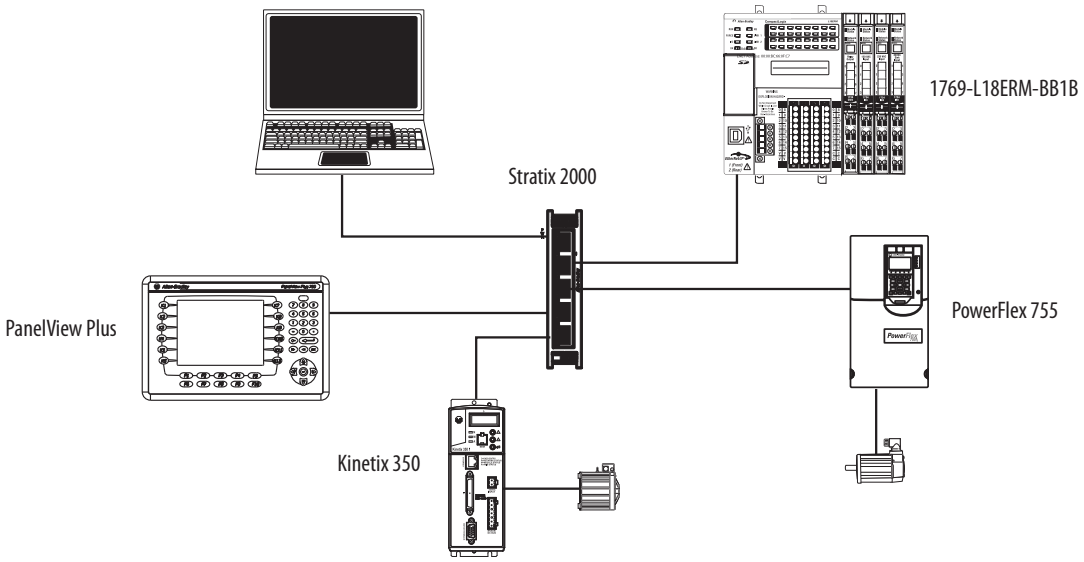

1769-L27ERM-QBFC1B Controller

The 1769-L27ERM-QBFC1B controller is typically used in control systems that require simpler configuration regarding using Integrated Motion over an EtherNet/IP network.

The simpler control system often includes unmanaged switches, such a Stratix 2000 switch, and Kinetix 350 drives, as shown in this example.

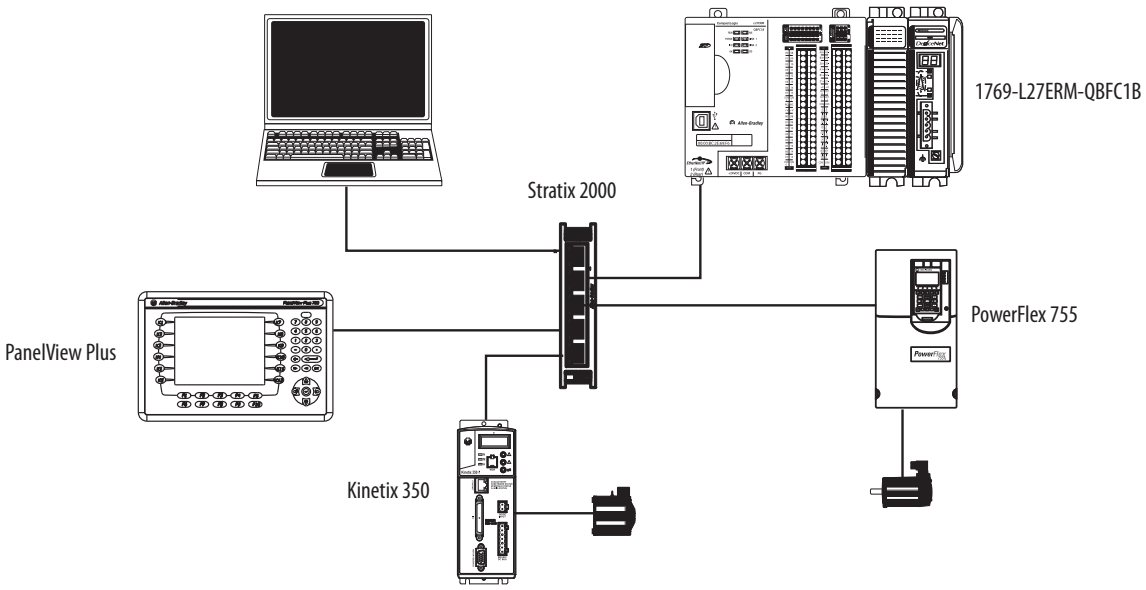

For more information on Integrated Motion over an EtherNet/IP network, see the publications that are listed on page 12.

Use a Secure Digital Card

This chapter describes the primary tasks that are required to store a project on an SD card or load a project from an SD card to the CompactLogix 5370 controller.

Topic	Page
Store or Load a Project with the Secure Digital Card	303
Store a Project	304
Load a Project	307

IMPORTANT The life expectancy of nonvolatile media is dependent on the number of write cycles that are performed. Nonvolatile media use a wear leveling technique, or technology for prolonging the service life, but avoid frequent writes.

Avoid frequent writes when logging data. We recommend that you log data to a buffer in the memory of your controller and limit the number of times data is written to removable media.

CompactLogix 5370 controllers support nonvolatile storage through the following SD cards:

- 1784-SD1 - Ships with CompactLogix 5370 controller and offers 1 GB of memory. You can order more 1784-SD1 cards if desired.
- 1784-SD2 cards - Available for separate purchase and offer 2 GB of memory.

For information on how to install or remove an SD card from a CompactLogix 5370 controller, see Install the Secure Digital Card on page 65

IMPORTANT We recommend that you leave the SD card installed in the controller and the card unlocked. The SD card saves extended diagnostic information that you can send to Rockwell Automation that provides enhanced diagnostics of your application and firmware revision if circumstances require this data.

This section briefly describes how to use the SD card when installed in a CompactLogix 5370 controller, that is, how to store a project from the controller to the SD card and how to load a project from the SD card to the controller.

However, you can complete other tasks by using the SD card, such as the following:

- Change the image that is loaded from the card
- Check for a load that was completed
- Clear an image from the memory card
- Store an empty image
- Change load parameters
- Read/write application data to the card

For more detailed information about using an SD card, see the Logix5000 Controllers Nonvolatile Memory Card Programming Manual, publication 1756-PM017.

Store or Load a Project with the Secure Digital Card

There are several options for when to load the project back into the user memory (RAM) of the CompactLogix 5370 controller. The controller configuration determines the option that is used.

The following table describes the conditions in which a project is loaded from as described in the following table.

Condition to Load Project from an SD Card into Controller RAM	Required Setting in Controller Configuration	Notes
Controller power-up	On Power Up	• During a power cycle, you lose any online changes and tag values you have not stored on the memory card. • A load from a memory card can also change the firmware of the controller. • For more information, see the Logix5000 Controllers Nonvolatile Memory Card Programming Manual, publication 1756-PM017. • You can use the application to load the project.
No project in the controller and you power up the controller	On Corrupt Memory	• During a power cycle, you lose any online changes and tag values you have not stored on the memory card. • A load from a memory card can also change the firmware of the controller. • For more information, see the Logix5000 Controllers Nonvolatile Memory Card Programming Manual, publication 1756-PM017. • You can use the application to load the project.
Only through application	User Initiated	You lose any online changes and tag values you have not stored on the memory card.

Store a Project

Follow these steps to store a project. These steps show a 1769-L18ERM-BB1B controller. The same steps apply for other CompactLogix 5370 controllers.

1. Go online with the controller.
2. Put the controller in Program mode, that is, Remote Program or Program.
3. On the Online tool bar, click the controller properties icon.

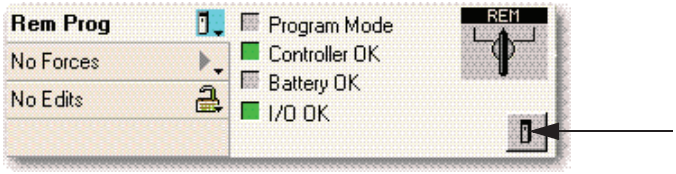

4. Click the Nonvolatile Memory tab.
5. Click Load/Store.

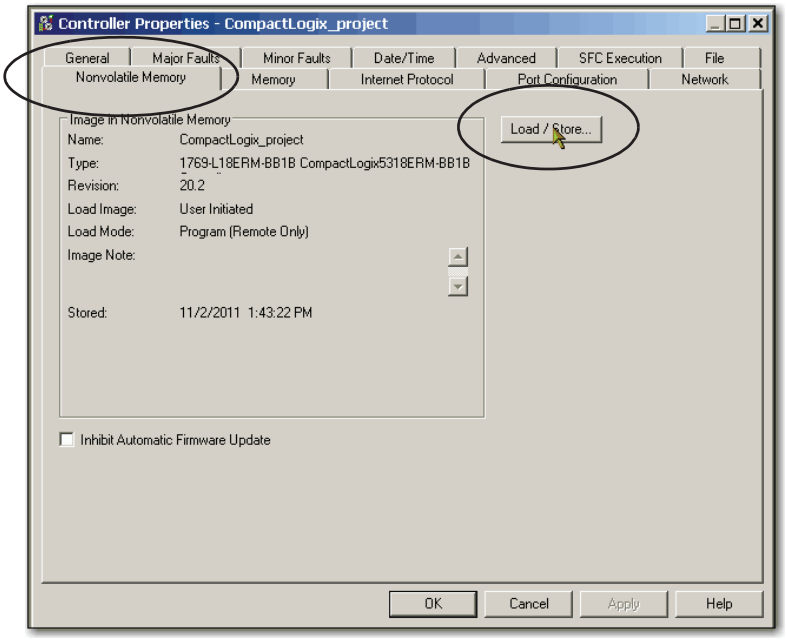

TIP If Load/Store is dimmed (unavailable), verify the following:

- You have specified the correct communication path and are online with the controller.
- The memory card is installed.

If the memory card is not installed, a message in the lower-left corner of the Nonvolatile Memory tab indicates the missing card as shown here.

6. Choose under what conditions to load the project into the user memory of the controller.

Project that is currently on the memory card of the controller (if any project is there).

Project that is currently in the user memory of the controller.

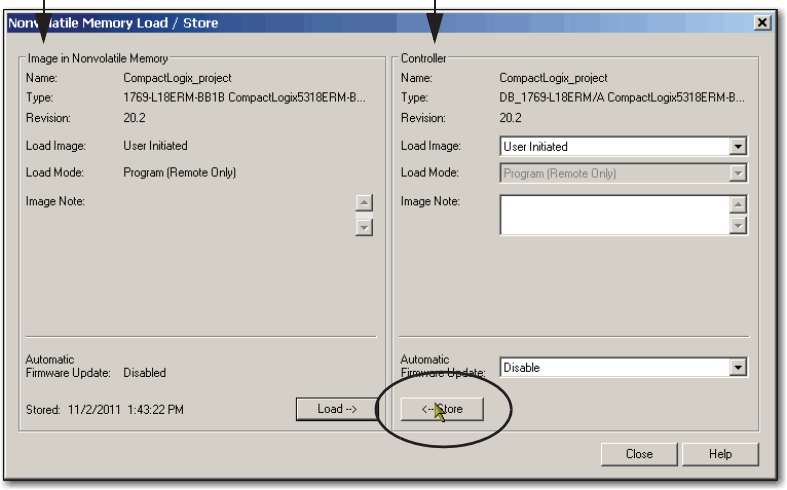

If you choose On Power Up or On Corrupt Memory, you must also choose the mode that you want the controller to go to after the load:

- Remote Program
- Remote Run

7. In the Automatic Firmware Update box, use the default (disable) or choose the firmware supervisor option.

IMPORTANT	The Firmware Supervisor option is not used to upgrade the controller firmware.

8. Click <- Store.

IMPORTANT	Store is not active if a SD card is locked.

A dialog box asks for confirmation of the store.

9. To store the project, click Yes.
10. Click OK.

After you click Store, the project is saved to the SD card as indicated by the controller status indicators. These conditions can exist:

- While the **store is in progress**, the following occurs:
  - The OK indicator is flashing green.
  - The SD indicator is flashing green.
  - A dialog box indicates that the store is in progress.
- When the **store is complete**, the following occurs:
  - The controller resets itself.

    When the controller is resetting itself, the status indicators execute a sequence of state changes, for example, a brief time with the OK status indicator in the solid red state. Wait for the controller to complete the sequence.
  - After the controller fully resets itself, the OK indicator is solid green.
  - The SD indicator is off.

IMPORTANT Allow the store to complete without interruption. If you interrupt the store, data corruption or loss can occur.

Load a Project

Follow these steps to use the application to load the project from an SD card. These steps show a 1769-L18ERM-BB1B controller. The same steps apply for other CompactLogix 5370 controllers.

1. Go online with the controller.
2. Put the controller in Program mode, that is, Remote Program or Program.
3. On the Online tool bar, click the controller properties icon.

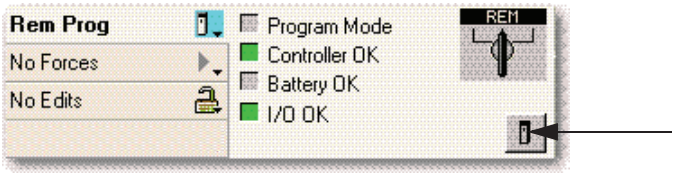

4. Click the Nonvolatile Memory tab.
5. Click Load/Store.

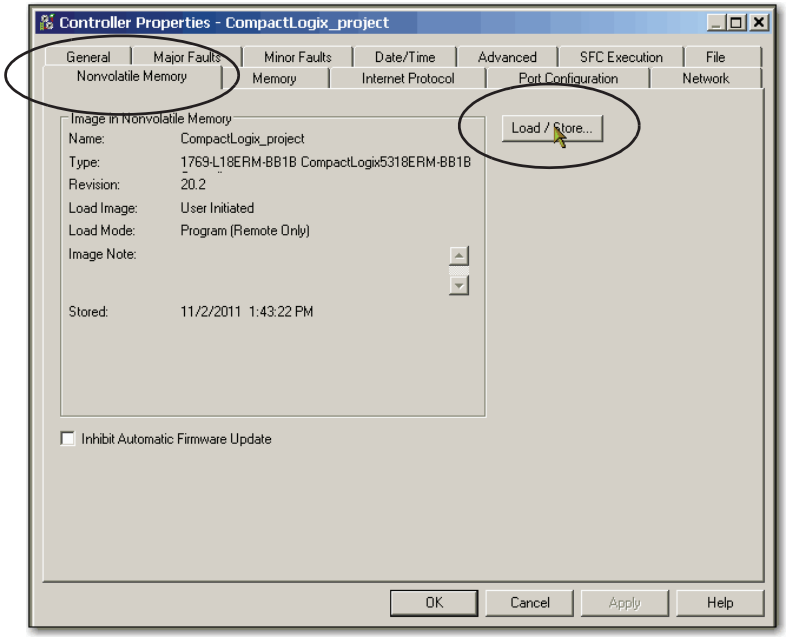

6. Click Load.

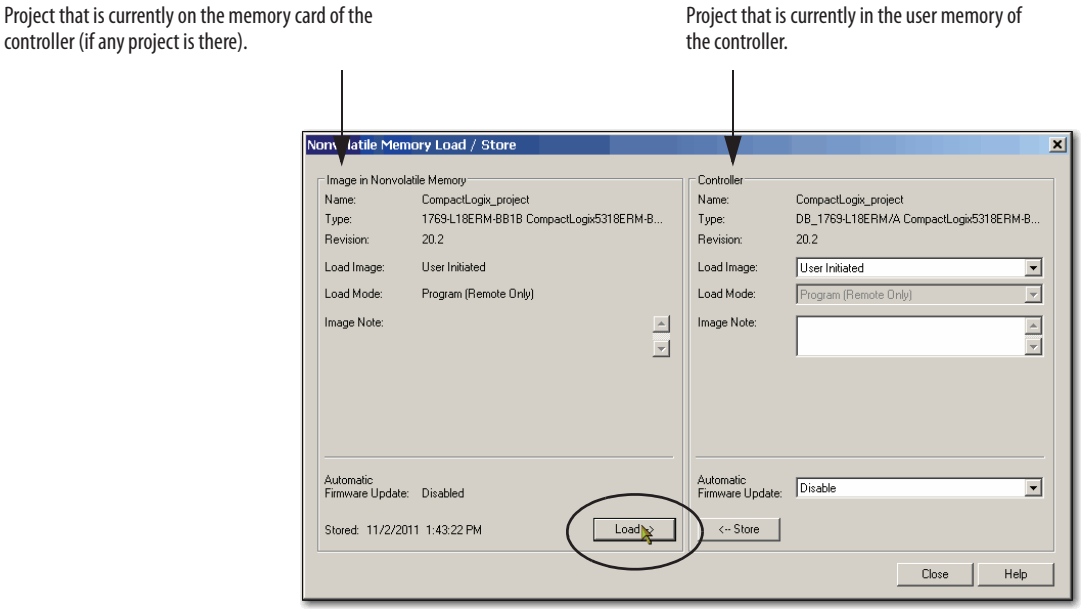

A dialog box prompts you to confirm the load.

7. To load the project, click Yes.
8. Click OK.

After you click Load, the project is loaded into the controller as indicated by the controller status indicators. These conditions can exist:

- While the **load is in progress**, the following occurs:
  - The controller resets itself.

    When the controller is resetting itself, the status indicators execute a sequence of state changes, for example, a brief time with the OK status indicator in the solid red state. Wait for the controller to complete the sequence.
  - After the controller fully resets itself, the OK indicator is solid green.
  - The SD indicator is off.

Troubleshoot the Module

This section explains how to interpret the status indicators on your CompactLogix 5370 controllers. All controllers use the status indicators that are described in the following table.

Status Indicator	Description
RUN	Indicates the operating mode of the controller.
FORCE	Indicates the force state.
I/O	Indicates the current state of communication between the controller and I/O modules.
OK	Indicates the state of the controller.
NS	Indicates the EtherNet/IP network status regarding the controller operating on the network.
LINK 1	Indicates the EtherNet/IP link status for port 1 if the controller.
LINK 2	Indicates the EtherNet/IP link status for port 2 of the controller.
SD	Indicates if there is activity on the SD card.

Use Logix Designer Application for Troubleshooting

The Logix Designer application indicates fault conditions in the following ways:

Warning signal on the main screen next to the module - This occurs when the connection to the module is broken. The controller state also indicates Faulted and the Controller fault is illuminated in red.

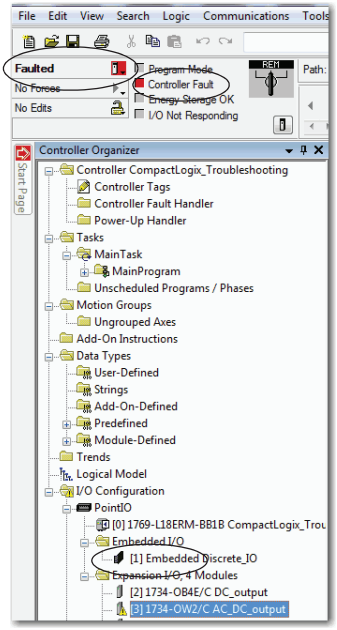

Message in the status line of a screen.

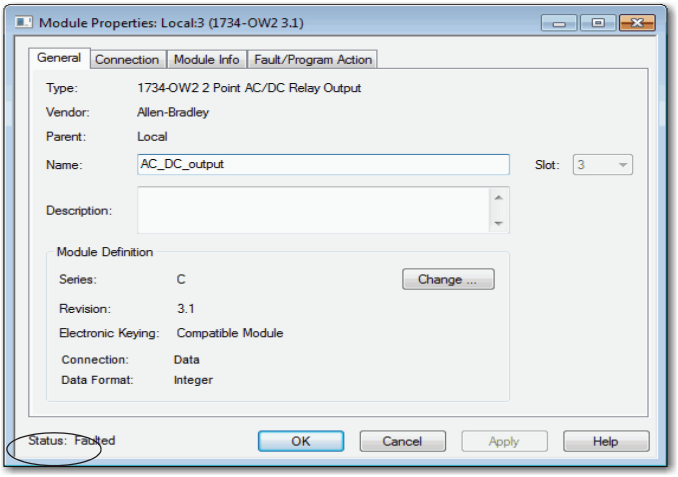

On the Module Info tab, in the Status section, the Major and Minor Faults are listed along with the Internal State of the module.

Notification in the Tag Editor - General module faults are also reported in the Tag Editor. Diagnostic faults are reported only in the tag editor.

The Value field indicates a fault with the number 1.

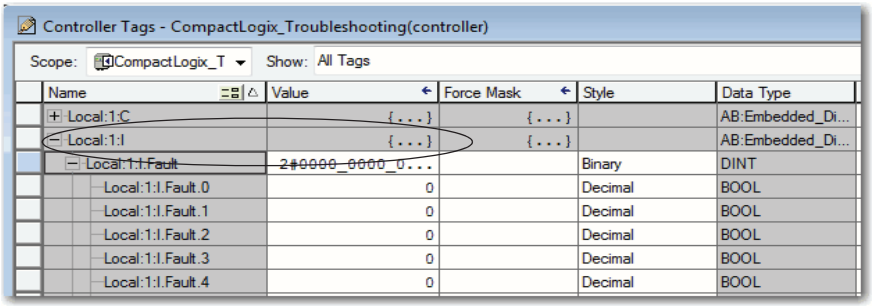

Fault Type Determination

To display recent fault information in the Major Faults tab of the Module Properties screen, you must check the Major Fault on Controller option in the Connection tab.

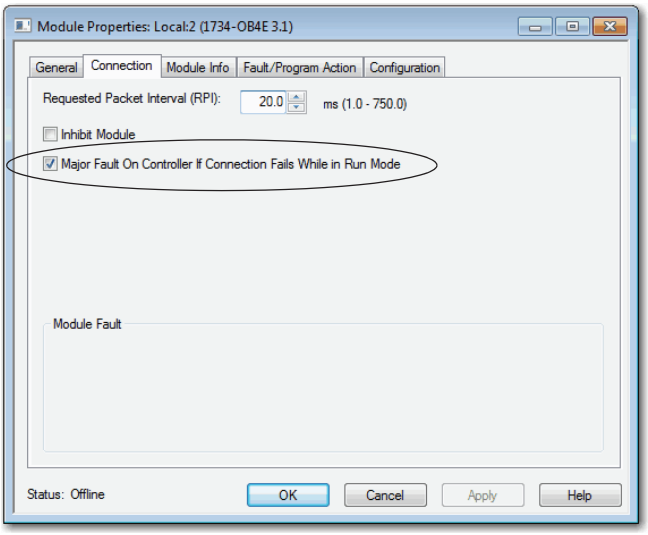

When you are monitoring the configuration properties of a module in the Logix Designer application and receive a Communication fault message, the Major Faults tab indicates the type of fault under Recent Faults.

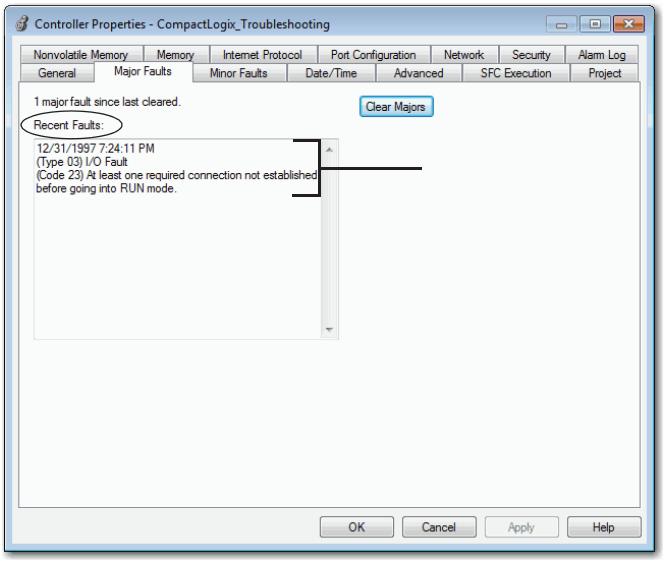

Use the CompactLogix 5370 Controllers Status Indicators

The following graphic shows the controller status indicators for all CompactLogix 5370 controllers.

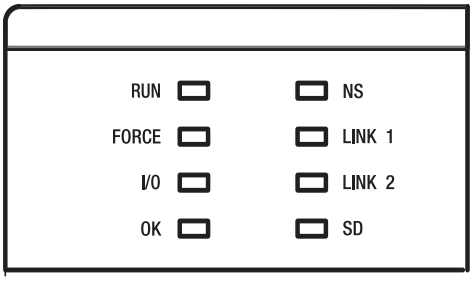

Table 39 - Controller Mode (RUN) Status Indicator

Status	Description
Off	The controller is in Program or Test mode.
Green	The controller is in Run mode.

Table 40 - Force State (FORCE) Status Indicator

Status	Description
Off	No tags contain I/O force values. I/O forces are inactive (disabled).
Yellow	I/O forces are active (enabled). I/O force values can exist.
Flashing yellow	One or more input or output addresses have been forced to an On or Off condition, but the forces have not been enabled.

Table 41 - I/O State (I/O) Status Indicator

Status	Description
Off	One of the following conditions exists: • There are no devices in the I/O configuration of the controller. - Applies to only CompactLogix 5370 L3 controllers. • The controller does not contain a project.
Green	The controller is communicating with all devices in its I/O configuration.
Flashing green	One or more devices in the I/O configuration of the controller are not responding.
Flashing red	One of the following conditions exists: • The controller is not communicating with any devices. • A fault has occurred on the controller. - Only CompactLogix 5370 L1 and L2 controllers.

Table 42 - Controller Status (OK) Status Indicator

Status	Description
Off	No power is applied.
Green	The controller is OK.
Flashing green	The controller is storing a project to or loading a project from the SD card.

Table 42 - Controller Status (OK) Status Indicator

Status	Description
Red	The controller detected a nonrecoverable major fault and cleared the project from memory.
Flashing red	One of the following: • The controller requires a firmware update. • A major recoverable fault occurred on the controller. • A nonrecoverable major fault occurred on the controller and cleared the program from memory. • A controller firmware update is in process. • An embedded I/O module firmware update is in process. - Only CompactLogix 5370 L1 controllers.
Dim green to red	Save to Flash at power-down.

Table 43 - Ethernet Network Status (NS) Status Indicator

Status	Description
Off	The port is not initialized; it does not have an IP address and is operating in BOOTP or DHCP mode.
Green	The port has an IP address and CIP connections are established.
Flashing green	The port has an IP address, but no CIP connections are established.
Red	The port has detected that the assigned IP address is in use.
Flashing red/green	The port is performing its power-up self test.

Table 44 - Ethernet Link Status (LINK 1/LINK 2) Status Indicator

Status	Description
Off	One of the following conditions exists: • No link. • Port administratively disabled. • Port disabled because rapid ring fault condition was detected (LINK2).
Green	One of the following conditions exists: • A 100 Mbps link (half- or full-duplex) exists, no activity. • A 10 Mbps link (half- or full-duplex) exists, no activity. • Ring network is operating normally and the controller is the active supervisor. • Ring network has encountered a rare partial network fault and the controller is the active supervisor.
Flashing green	One of the following conditions exists: • A 100 Mbps link exists and there is activity. • A 10 Mbps link exists and there is activity.

Table 45 - SD Card Activity (SD) Status Indicator

Status	Description
Off	There is no activity to the SD card.
Flashing green	The controller is reading from or writing to the SD card.
Flashing red	The SD card does not have a file system.

Notes:

Connections over an EtherNet/IP Network

IMPORTANT Before using this section, first use the information at Nodes on an EtherNet/IP Network on page 130 to design and configure your CompactLogix 5370 control system.

For more information on how to best design EtherNet/IP network use in your CompactLogix 5370 control system, see these resources:

- The EtherNet/IP Capacity Tool, available at http://www.rockwellautomation.com/solutions/integratedarchitecture/resources3.html#enetpredict

  The EtherNet/IP Capacity Tool helps you in the initial layout of your EtherNet/IP network.

- Ethernet Design Considerations Reference Manual, publication ENET-RM002

EtherNet/IP Network Connections

CompactLogix 5370 controllers use connections to manage communication on the EtherNet/IP network. A connection is a point-to-point communication mechanism that is used to transfer data between a transmitter and a receiver. Connections can be logical or physical.

You indirectly determine the number of connections the controller uses by configuring the controller to communicate with other devices in the system. Connections are allocations of resources that provide more reliable communication between devices than unconnected messages.

All EtherNet/IP connections are unscheduled. An unscheduled connection is a message transfer between controllers that the requested packet interval (RPI) or the program, such as a MSG instruction, triggers. Unscheduled messaging lets you send and receive data when needed.

This table list information for CompactLogix 5370 controllers.

Table 46 - CompactLogix 5370 Controller EtherNet/IP Network Port Specifications

Cat. No.	Connections			CIP Unconnected Messages (backplane + Ethernet)	Packet Rate Capacity (packets/second)(1)		SNMP Support (password required)	Media Support	Produced/Consumed Tags	
	Controller	TCP	CIP		I/O	HMI/MSG			Number of Multicast Tags, max(2)	Unicast Available
1769-L16ER-BB1B	256	120	256	256	6000 @ 500 bytes/ packet	400 messages/s @ 20% comm. timeslice	Yes	Twisted Pair	32 multicast produced tags 128 unicast produced tags	Yes
1769-L18ER-BB1B										
1769-L18ERM-BB1B										
1769-L24ER-QB1B										
1769-L24ER-QBFC1B										
1769-L27ERM-QBFC1B										
1769-L30ER										
1769-L30ERM										
1769-L30ER-NSE										
1769-L33ER										
1769-L33ERM										
1769-L36ERM										

(1) Total packet rate capacity = I/O Produced Tag, max + HMI/MSG, max Packet rates vary depending on packet size. For more detailed specifications, see the capacity section of the EDS file for the catalog number.

(2) These are the maximum numbers of CIP I/O connections.

Connect Power to the Series A L1 CompactLogix 5370 Controllers

This appendix explains how to connect power to the series A L1 CompactLogix 5370 controllers.

Topic	Page
CompactLogix 5370 L1, Series A, Controller Power Connection	317
CompactLogix 5370 L1, Series A, Controller Field Power to I/O Devices Connection	322

CompactLogix 5370 L1, Series A, Controller Power Connection

IMPORTANT This section describes how to power the controller via the VDC+ and VDC- terminals.

Connections to the VDC+ and VDC- terminals **do not** provide power to input or output devices that are connected to the embedded I/O modules of the controller or local expansion modules. Power must be connected to the FP+ and FP- terminals to provide power to input or output devices that are connected to the embedded I/O modules of the controller or local expansion modules.

For more information on how to provide power to input or output devices that are connected to the embedded I/O modules of the controller and local expansion modules, see page 322.

The external power supply must be dedicated to the embedded supply of the controller. The external power supply converts 115/230V AC power to 24V DC or other application-required DC voltage that is within the operating range of the controller.

WARNING: Do not connect directly to line voltage. Line voltage must be supplied by a suitable, approved isolating transformer or power supply having short circuit capacity not exceeding 100VA maximum or equivalent. The controller power requirement is 50VA.

Power is connected to the controller via a removable connector that is connected to the front of the controller. The following graphic shows the connector.

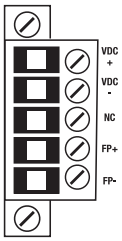

IMPORTANT The controller is grounded once it is installed on a DIN rail as described in Mount the System on page 24.

Consider these points before completing the steps in this section:

- This section describes how to connect an external 24V DC power source to the CompactLogix 5370 L1 controller.

  For information on how to provide field power to input and output devices that are connected to the embedded I/O modules of the controller and local expansion modules via the removable connector, see page 152.

ATTENTION: You must use an external power supply that is Class 2 or SELV-listed.

- The external power supply that provides power to the CompactLogix 5370 L1 controller must be dedicated to power the controller.

- You must use a separate, dedicated external 24V DC power source to connect power to other terminals on the removable connector and devices in the system, for example, the FP+ terminal or a barcode scanner, respectively.

- The external 24V DC power source that is connected to the VDC+ and VDC- terminals on the removable connector must reside in the same enclosure as the CompactLogix 5370 L1 controller.

- Use a power source that most effectively meets your application needs. That is, calculate The power requiremetns for your application before choosing a power source to avoid using a power source that far exceeds your application requirements.

- This section assumes that any DIN rail you use has been grounded following Industrial Automation Wiring and Grounding Guidelines, publication 1770-4.1.

- The embedded power supply of the CompactLogix 5370 L1 controller provides power to the controller and POINTBus backplane. It does not provide field-side power to the embedded I/O or local expansion modules.

- Not all Class 2/SELV-listed power supplies are certified for use in all applications, for example, use in nonhazardous and hazardous environments.

  Before installing an external power supply, consult all specification and certification information to verify that you are using an acceptable external power supply.

- Only for example purposes, this section describes how to use a 1606-XLE120E, NEC Class 2 switched-mode power supply. The exact steps for other external power supplies can vary from the steps that are described here.

Complete these steps to connect power to the CompactLogix 5370 L1 controller. Series B L1 CompactLogix 5370 controllers can also be connected to power as instructed in this procedure.

1. Verify that the external 24V DC power source is not powered.
2. Mount the external 24V DC power source on a DIN rail.

   The external 24V DC power source can be installed on the same DIN rail as the controller or a separate DIN rail.

3. Connect wires to the 24V DC+ and 24V DC- connections on the external 24V DC power source.

WARNING: If you connect or disconnect wiring while the field-side power is on, an electrical arc can occur. This could cause an explosion in hazardous location installations. Be sure that power is removed or the area is nonhazardous before proceeding.

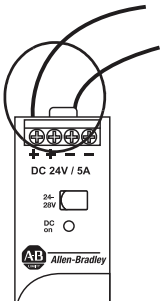

4. Pull the removable connector off the CompactLogix 5370 L1 controller.

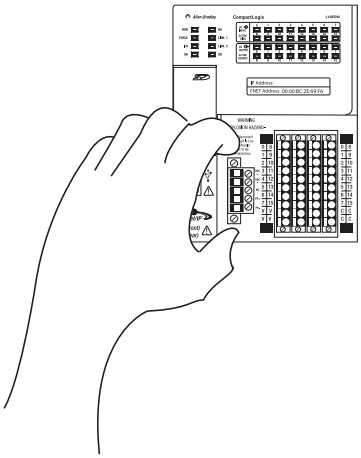

5. Connect the wire that is connected to the 24V DC+ terminal on the external 24V DC power source to the VDC+ terminal, that is, the top terminal, on the removable connector.

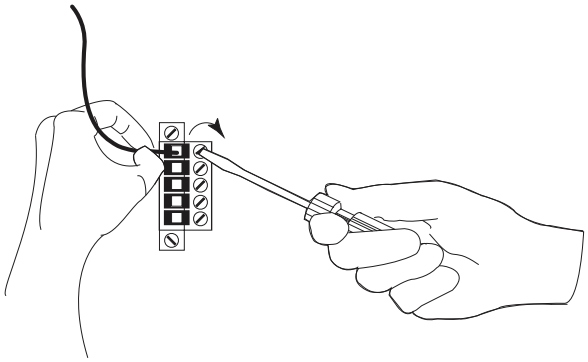

6. Connect the wire that is connected to the 24V DC- terminal on the external 24V DC power source to the VDC- terminal, that is, the terminal that is second from the top, on the removable connector.

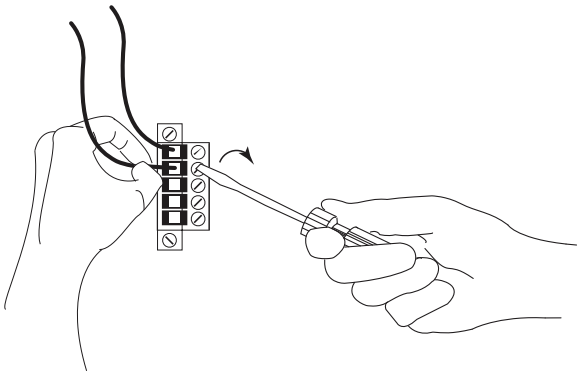

IMPORTANT If your application requires a power control device, for example, a switch or relay, between the external 24V DC power source and the CompactLogix 5370 L1 controller to control when the controller is powered, you must install the power control device at the VDC+ terminal on the removable connector.

If you install the power control device at the VDC- terminal, the CompactLogix 5370 L1 controller can have problems powering up or powering down properly.

7. Plug the removable connector back into the controller.
8. Secure the removable connector in place.

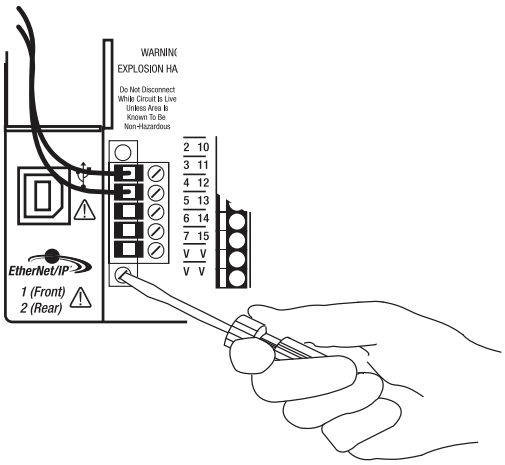

9. Turn on power to the external 24V DC power source.

The following graphic shows an external 24V DC power source that is connected to a CompactLogix 5370 L1 controller.

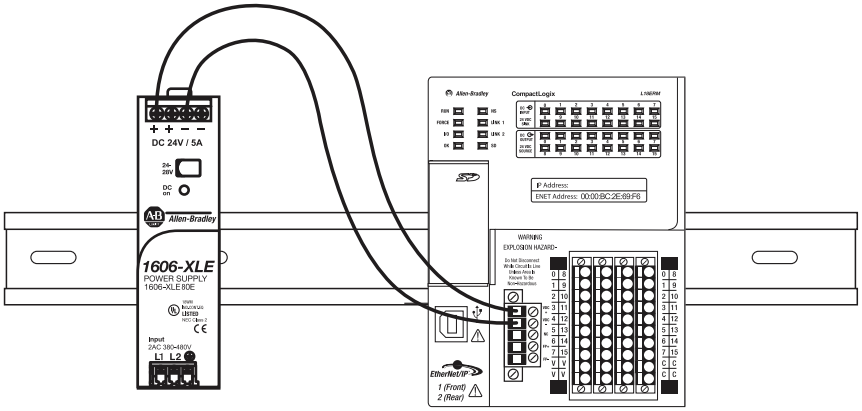

CompactLogix 5370 L1, Series A, Controller Field Power to I/O Devices Connection

Complete these steps to connect field power to the CompactLogix 5370 L1 series A controller. Series B L1 CompactLogix 5370 controllers can also be connected to field power as instructed in this procedure.

1. Verify that the separate external 24V DC power source that powers the CompactLogix 5370 L1 controller is not powered.
2. Verify that the external 24V DC power source that is connected to the FP+ and FP- terminals is not powered.
3. Mount the external power supply that connects to the FP+ and FP- terminals on a DIN rail.

   The external power supply can be installed on the same DIN rail as the controller or a separate DIN rail.

4. Connect wires to the appropriate + and - connections on the external 24V DC power source.

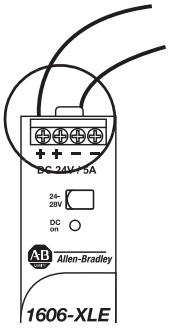

WARNING: If you connect or disconnect wiring while the field-side power is on, an electrical arc can occur. This could cause an explosion in hazardous location installations. Be sure that power is removed or the area is nonhazardous before proceeding.

5. Pull the removable connector off of the CompactLogix 5370 L1 controller.

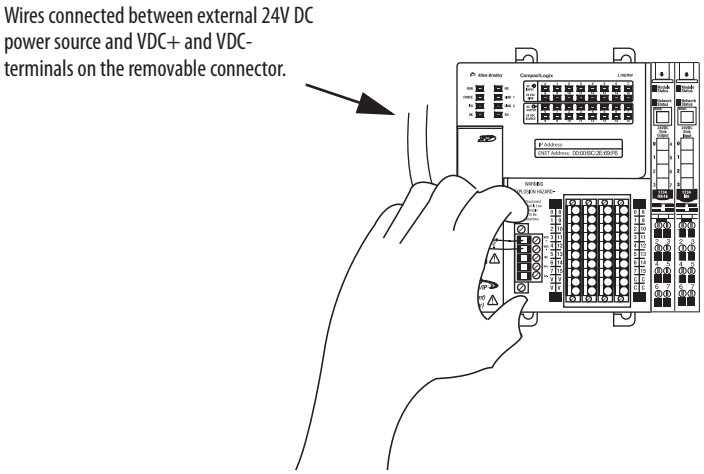

6. Connect the wire that is connected to the + terminal on the external 24V DC power source to the FP+ terminal, that is, the fourth terminal from the top, on the removable connector.

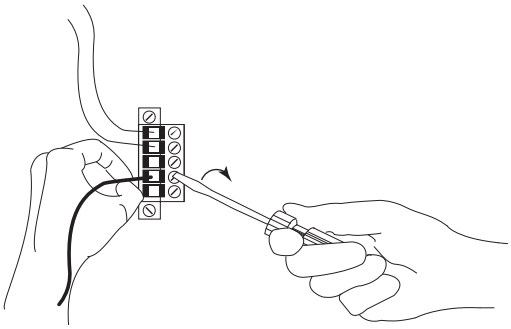

7. Connect the wire that is connected to the - terminal on the external 24V DC power source to the FP- terminal, that is the fifth terminal from the top, on the removable connector.

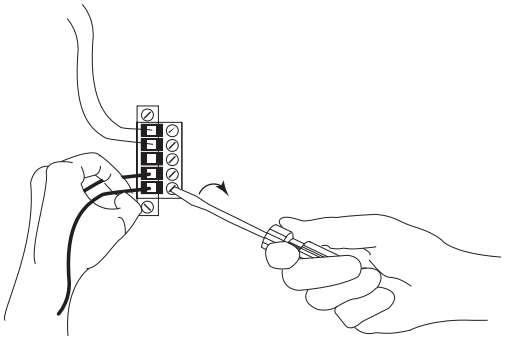

8. Plug the removable connector into the controller.
9. Secure the removable connector in place.

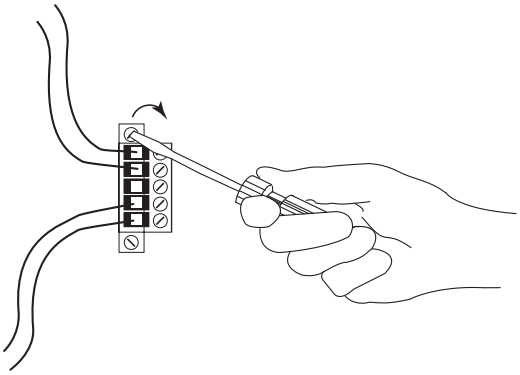

10. Turn on power to the separate external 24V DC power source connected to the VDC+ and VDC- terminals of the removable connector.
11. Turn on power to the external 24V DC power source connected to the FP+ and FP- terminals of the removable connector.

The following graphic shows **separate** external 24V DC power supplies connected to the VDC+/VDC- and FP+/FP- terminals on the removable connector, respectively.

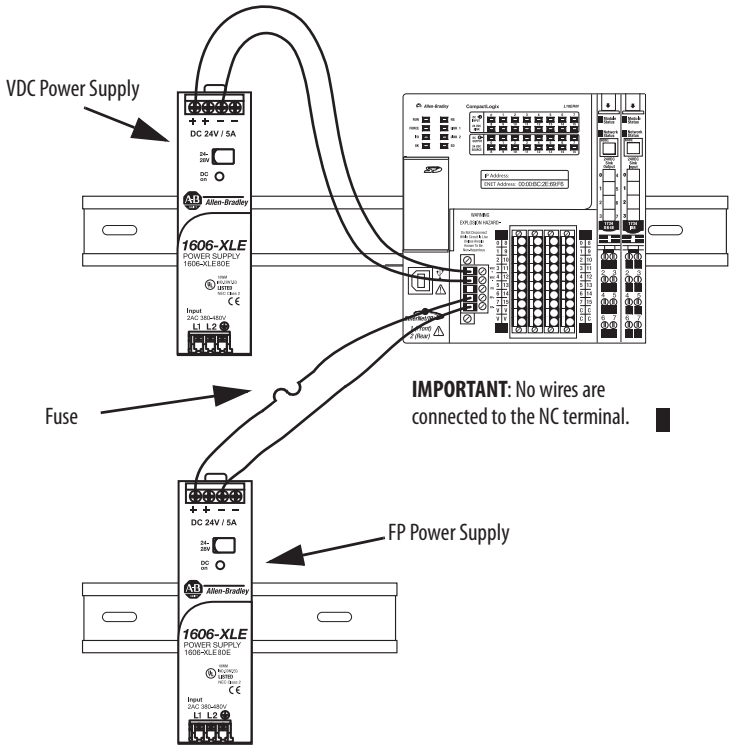

IMPORTANT	Install a user-replaceable fuse with overcurrent protection of 4…6 A @ 52.5…68.25 A^2t in line between the incoming power and the FP+ terminal.

History of Changes

Changes to the Manual

With the availability of new controllers, modules, applications, and programming software features, this manual has been revised to include updated information. This appendix briefly summarizes changes that have been made with previous revisions of this manual.

IMPORTANT This appendix does not list the changes that have been implemented with this revision of the publication.

For a list of changes made in this revision of the publication, see Summary of Changes on page 3.

Reference this appendix if you need information to determine what changes have been made across multiple revisions. This can be especially useful if you are deciding to upgrade your hardware or software that is based on information added with previous revisions of this manual.

This table lists the publication revision, publication date, and changes that are made with the revision.

Table 47 - History of Changes

Publication Revision and Date	Topic
1769-UM021D-EN-P, December 2012	Updated embedded input point wiring diagrams on a CompactLogix 5370 L1 controller Updated embedded output point wiring diagrams on a CompactLogix 5370 L1 controller Use the Event Task Addition of Develop Applications chapter Addition of History of Changes appendix
1769-UM021C-EN-P, May 2012	Added the description of CompactLogix 5370 L2 controllers, including the following content: • Installing the controller • Control system components • Controller functionality • Example system configurations on an EtherNet/IP network • Example system configurations on a DeviceNet network • Using I/O modules with the controller 169 • Motion support with the 1769-L27ERM-QBFC1B controller • EtherNet/IP network connection specifications
1769-UM021B-EN-P, February 2012	Removed the descriptions of the I/O Event Task and its use with the CompactLogix 5370 L1 controllers. In RSLogix 5000 software, version 20.*xx.xx*, you can configure the I/O Event Task for your CompactLogix 5370 L1 controller's project. However, the task will never be triggered because the functionality has been disabled in the controller.

Numerics

1734 POINT I/O modules 151-187
BUS OFF detection and recovery 187
configure 179-184
monitor faults 184
removal and insertion under power 171
requested packet interval 172
select 151
using as local expansion modules with CompactLogix 5370 L1 controllers 19
validate layout 170-174
1769 Compact I/O modules 241-265
calculate system power consumption 249-251
CompactLogix 5370 L3 controllers 62
configure 229-232, 257-263
connections 232, 258
end cap detection 240, 265
local banks available with CompactLogix 5370 L3 controllers 62
monitor faults 238, 264
requested packet interval 223, 231, 246, 258
select 189, 241
using as local expansion modules with CompactLogix 5370 L2 controllers 40
validate layout 246-254
1769 Compact I/O power supplies
calculate system power consumption 249-251
1769-SDN DeviceNet scanner module 145
1784-SD1 and 1784-SD2 cards 21, 41
installation
CompactLogix 5370 L1 controllers 22-23
CompactLogix 5370 L2 controllers 42-43
CompactLogix 5370 L3 controllers 65-66

A

additional resources 12
Add-On Instructions
in project 279
application
elements 267
AutoFlash 100
load firmware 110-112

B

BOOTP server 79
set IP address 83-86

C

communicate
over networks 127-145
CompactLogix 5370 L1 controllers
connecting power 30-34, 317-324
connections to I/O modules 181
DIN rail use 24
direct connections 181
embedded I/O module 19
wiring diagrams 160
embedded power supply 18, 319
EtherNet/IP network
Quality of Service technology 142
socket interface 138-142
topologies 132-136
EtherNet/IP network controller connections 315-316
example EtherNet/IP network system configuration 122
grounding 24, 27
I/O modules 151-187
installation 15-36
grounding 27
minimum spacing 25
mounting 24-26
SD card 22-23
system dimensions 26
integrated motion over an EtherNet/IP network 289-300
local expansion modules 19
BUS OFF detection and recovery 187
removal and insertion under power 171
minimum spacing 25
mounting 24-26
networks
EtherNet/IP network connection 36
USB connection 35
parts 21
place I/O modules 174
rack-optimized connections 181
select I/O modules 151
selecting operating mode 113-114
status indicators 309-313
system components 18, 118
system dimensions 26
wiring diagrams 160
CompactLogix 5370 L2 controllers
connecting power 53-56
connections to I/O modules 232
DeviceNet network
using 1769-SDN DeviceNet scanner module 145
DIN rail use 44, 50
direct connections 232
embedded I/O module 40
embedded power supply 40, 53
EtherNet/IP network
Quality of Service technology 142
socket interface 138-142

topologies 132-136
EtherNet/IP network controller connections 315-316
example DeviceNet network system configuration 124, 144
example EtherNet/IP network system configuration 123
grounding 44, 50
installation 37-58
grounding 50
minimum spacing 45
mounting 44-45, 49
SD card 42-43
system dimensions 45
integrated motion over an EtherNet/IP network 289-300
local expansion modules 40
minimum spacing 45
mounting 44-45, 49
networks
DeviceNet 143-145
EtherNet/IP network connection 58
USB connection 57
parts 41
power supply
distance rating 146-149
rack-optimized connections 232
select I/O modules 189
selecting operating mode 113-114
status indicators 309-313
system components 40, 118
system dimensions 45

CompactLogix 5370 L3 controllers
available local I/O banks 62
calculate system power consumption 249-251
connecting power 69
connections to I/O modules 258
DeviceNet network
using 1769-SDN DeviceNet scanner module 145
DIN rail use 75
direct connections 258
EtherNet/IP network
Quality of Service technology 142
socket interface 138-142
topologies 132-136
EtherNet/IP network controller connections 315-316
example DeviceNet network system configuration 124, 144
example EtherNet/IP network system configuration 123
grounding 73
I/O modules 241-265
installation 59-78
grounding 73
minimum spacing 71
mounting 73
SD card 65-66
system dimensions 72
integrated motion over an EtherNet/IP network 289-300
local 1769 Compact I/O modules 62
removal and insertion under power 67
minimum spacing 71
mounting 70-73
networks
DeviceNet 143-145
EtherNet/IP network connection 77
USB connection 76
parts 64
power supply
current capacity 150
distance rating 62, 73, 146-149
rack-optimized connections 258
select I/O modules 241
selecting operating mode 113-114
status indicators 309-313
system components 62, 118
system dimensions 72

configure
I/O modules
for use with CompactLogix 5370 L1 controllers 179-184
for use with CompactLogix 5370 L2 controllers 229-232
for use with CompactLogix 5370 L3 controllers 257-263
system overhead time slice 286

connections
direct
CompactLogix 5370 L1 controllers 181
CompactLogix 5370 L2 controllers 232
CompactLogix 5370 L3 controllers 258
EtherNet/IP network controller connections 315-316
rack-optimized
CompactLogix 5370 L1 controllers 181
CompactLogix 5370 L2 controllers 232
CompactLogix 5370 L3 controllers 258
to I/O modules
CompactLogix 5370 L1 controllers 181
CompactLogix 5370 L2 controllers 232
CompactLogix 5370 L3 controllers 258

continuous task 270

ControlFLASH utility 79, 100
load firmware 105-108

controller
monitor
connections 282
program 272
routine 274
tags 275
tasks 268

current capacity
CompactLogix 5370 L3 controllers 150

D

develop
applications 267

device-level ring topology 78

DeviceNet network
1769-SDN DeviceNet scanner module 145

DHCP server 79
set IP address 89

DIN rail
CompactLogix 5370 L1 controllers 24
CompactLogix 5370 L2 controllers 44, 50
CompactLogix 5370 L3 controllers 75
direct connections
CompactLogix 5370 L1 controllers 181
CompactLogix 5370 L2 controllers 232
CompactLogix 5370 L3 controllers 258
distance rating
power supply
CompactLogix 5370 L3 controllers 62, 73

E

elements
control application 267
embedded I/O module
CompactLogix 5370 L1 controllers 19
CompactLogix 5370 L2 controllers 40
wiring diagrams 160
embedded power supply
CompactLogix 5370 L1 controllers 319
calculate system power consumption 174, 225
CompactLogix 5370 L2 controllers 53
enclosures
minimum spacing
CompactLogix 5370 L1 controllers 25
CompactLogix 5370 L2 controllers 45
system dimensions
CompactLogix 5370 L1 controllers 26
CompactLogix 5370 L2 controllers 45
EtherNet/IP network
available network topologies 36, 58, 78
change IP address 96-99
via Logix Designer application 98-99
via RSLinx Classic software 97
via SD card 99
communication 127-137
connection for CompactLogix 5370 L1 controllers 36
connection for CompactLogix 5370 L2 controllers 58
connection for CompactLogix 5370 L3 controllers 77
controller connections 315-316
example configurations 122-123
Integrated Motion over an EtherNet/IP network 120, 289-300
overview 127-137
Quality of Service technology 142
set IP address 81-95
via BOOTP server 83-86
via DHCP server 89
via Logix Designer application 92-94
via RSLinx Classic software 90-91
via SD card 95
socket interface 138-142
topologies 132-137
device-level ring 132
linear 132, 135
star 136
event task 175-178, 270

F

fault code
use GSV to get 283
faults
monitor I/O module faults
CompactLogix 5370 L1 controllers 184
CompactLogix 5370 L2 controllers 238
CompactLogix 5370 L3 controllers 264
firmware
download 100-103
load 100-112
via AutoFlash 110-112
via ControlFLASH utility 105-108
via SD card 112

G

grounding
CompactLogix 5370 L1 controllers 24, 27
CompactLogix 5370 L2 controllers 44, 50
CompactLogix 5370 L3 controllers 73
GSV
fault code 283
monitor
connection 283

I

I/O modules
calculate system power consumption
CompactLogix 5370 L1 controllers 174
CompactLogix 5370 L2 controllers 225
CompactLogix 5370 L3 controllers 249-251
CompactLogix 5370 L1 controllers 151-187
BUS OFF detection and recovery 187
local expansion modules 166
CompactLogix 5370 L2 controllers 189-240
local expansion modules 220
CompactLogix 5370 L3 controllers 241-265
local 1769 Compact I/O modules 62
configure
for use with CompactLogix 5370 L1 controllers 179-184
for use with CompactLogix 5370 L2 controllers 229-232
for use with CompactLogix 5370 L3 controllers 257-263
connections
CompactLogix 5370 L1 controllers 181
CompactLogix 5370 L2 controllers 232
CompactLogix 5370 L3 controllers 258
embedded I/O module on CompactLogix 5370 L1 controllers 19
embedded I/O module on CompactLogix 5370 L2 controllers 40
end cap detection
CompactLogix 5370 L2 controllers 240
CompactLogix 5370 L3 controllers 265
monitor faults
CompactLogix 5370 L1 controllers 184
CompactLogix 5370 L2 controllers 238

CompactLogix 5370 L3 controllers 264
place
CompactLogix 5370 L1 controllers 174
requested packet interval 231, 258
CompactLogix 5370 L1 controllers 172, 180
CompactLogix 5370 L2 controllers 223
CompactLogix 5370 L3 controllers 246
select
CompactLogix 5370 L1 controllers 151
CompactLogix 5370 L2 controllers 189
CompactLogix 5370 L3 controllers 241
validate layout
1734 POINT I/O modules 170-174
1769 Compact I/O modules 223-228, 246-254
CompactLogix 5370 L1 controllers 170-174
CompactLogix 5370 L2 controllers 223-228
CompactLogix 5370 L3 controllers 246-254

installation
CompactLogix 5370 L1 controllers 15-36
CompactLogix 5370 L2 controllers 37-58
CompactLogix 5370 L3 controllers 59-78
DIN rail
CompactLogix 5370 L1 controllers 24
CompactLogix 5370 L2 controllers 44, 50
CompactLogix 5370 L3 controllers 75
grounding
CompactLogix 5370 L1 controllers 27
CompactLogix 5370 L2 controllers 50
CompactLogix 5370 L3 controllers 73
local 1769 Compact I/O modules
CompactLogix 5370 L3 controllers 242
minimum spacing
CompactLogix 5370 L1 controllers 25
CompactLogix 5370 L2 controllers 45
CompactLogix 5370 L3 controllers 71
mounting
CompactLogix 5370 L1 controllers 24-26
CompactLogix 5370 L2 controllers 44-45, 49
CompactLogix 5370 L3 controllers 70-73
panel mounting
CompactLogix 5370 L2 controllers 49
CompactLogix 5370 L3 controllers 73
power supply connections to CompactLogix 5370 L1 controllers 30-34, 317-324
power supply connections to CompactLogix 5370 L2 controllers 53-56
required software tasks 79-114
SD card
CompactLogix 5370 L1 controllers 22-23
CompactLogix 5370 L2 controllers 42-43
CompactLogix 5370 L3 controllers 65-66
system dimensions
CompactLogix 5370 L1 controllers 26
CompactLogix 5370 L2 controllers 45
CompactLogix 5370 L3 controllers 72

Integrated Motion over an EtherNet/IP network 120, 289-300
configure 293-296
drive limits 291
example configuration
CompactLogix 5370 L1 controllers 299
CompactLogix 5370 L2 controllers 300
CompactLogix 5370 L3 controllers 297
supported axes 290
time synchronization 292

IP address 79
change 96-99
via Logix Designer application 98-99
via RSLinx Classic software 97
via SD card 99
set 81-95
via BOOTP server 83-86
via DHCP server 89
via Logix Designer application 92-94
via RSLinx Classic software 90-91
via SD card 95

L

linear network topology 78

local 1769 Compact I/O modules
CompactLogix 5370 L3 controllers 62

local expansion modules
1734 POINT I/O modules 19
1769 Compact I/O modules 40
CompactLogix 5370 L1 controllers 19
CompactLogix 5370 L2 controllers 40

local I/O banks
CompactLogix 5370 L3 controllers 62

Logix Designer application
AutoFlash 100
change IP address 98-99
configure I/O modules
for use with CompactLogix 5370 L1 controllers 179-184
for use with CompactLogix 5370 L2 controllers 229-232
for use with CompactLogix 5370 L3 controllers 257-263
Integrated Motion over an EtherNet/IP network 289-300
load a project to an SD card 307-308
set IP address 92-94
store a project to an SD card 304-306
using event task 175-178

M

memory storage
SD cards 21, 41

minimum spacing
CompactLogix 5370 L1 controllers 25
CompactLogix 5370 L2 controllers 45
CompactLogix 5370 L3 controllers 71

mounting
CompactLogix 5370 L1 controllers 24-26
CompactLogix 5370 L2 controllers 44-45, 49
CompactLogix 5370 L3 controllers 70-73

N

networks
DeviceNet 143-145
example CompactLogix 5370 L2 controller system configuration 124, 144
example CompactLogix 5370 L3 controller system configuration 124
EtherNet/IP
change IP address via Logix Designer application 98-99
change IP address via RSLinx Classic software 97
change IP address via SD card 99
example configurations 122-123
network connection for CompactLogix 5370 L1 controllers 36
network connection for CompactLogix 5370 L2 controllers 58
network connection for CompactLogix 5370 L3 controllers 77
network controller connections 315-316
Quality of Service technology 142
set IP address via BOOTP server 83-86
set IP address via DHCP server 89
set IP address via Logix Designer application 92-94
set IP address via RSLinx Classic software 90-91
set IP address via SD card 95
socket interface 138-142
overviews 127-145
USB
connection for CompactLogix 5370 L1 controllers 35
connection for CompactLogix 5370 L2 controllers 57
connection for CompactLogix 5370 L3 controllers 76

O

operating mode
selecting 113-114

P

panel mounting
CompactLogix 5370 L2 controllers 49
CompactLogix 5370 L3 controllers 73
periodic task 270
power supply
connections to CompactLogix 5370 L1 controllers 30-34, 317-324
connections to CompactLogix 5370 L2 controllers 53-56
connections to CompactLogix 5370 L3 controllers 69
current capacity
CompactLogix 5370 L3 control systems 150
distance rating 146-149
CompactLogix 5370 L3 controllers 73
embedded power supply with CompactLogix 5370 L1 controllers 18, 319
embedded power supply with CompactLogix 5370 L2 controllers 40, 53
priority
task 271
program
in project 272
scheduled 273
system overhead time slice 285
unscheduled 273
programming languages 278
project
elements 267

Q

Quality of Service technology 142

R

rack-optimized connections
CompactLogix 5370 L1 controllers 181
CompactLogix 5370 L2 controllers 232
CompactLogix 5370 L3 controllers 258
removal and insertion under power
local 1769 Compact I/O modules
CompactLogix 5370 L3 controllers 67
local expansion modules
CompactLogix 5370 L1 controllers 171
requested packet interval
CompactLogix 5370 L1 controllers 172, 180
CompactLogix 5370 L2 controllers 223, 231
CompactLogix 5370 L3 controllers 246, 258
routine
in project 274
RSLinx Classic software 79, 143
change IP address 97
set IP address 90-91
RSLogix 5000 software 79, 143
RSNetWorx for DeviceNet software 79, 143

S

sample projects 287
scheduled
program 273
SD card 100, 301-308
change IP address 99
installation

CompactLogix 5370 L1 controllers 22-23
CompactLogix 5370 L2 controllers 42-43
CompactLogix 5370 L3 controllers 65-66
load a project 307-308
load firmware 112
set IP address 95
store a project 304-306
socket interface 138-142
software
BOOTP 79
set IP address 83-86
DHCP 79
set IP address 89
Logix Designer application
AutoFlash 100
required installation tasks 79-114
RSLinx Classic 79, 143
change IP address 97
set IP address 90-91
RSLogix 5000 79, 143
RSNetWorx for DeviceNet 79, 143
Studio 5000 environment 79, 143
star network topology 78
status
monitor
connections 282
status indicators 309-313
Studio 5000 environment 79, 143
system assembly
calculate system power consumption
CompactLogix 5370 L1 controllers 174, 225
CompactLogix 5370 L3 controllers 249-251
CompactLogix 5370 L3 controllers
select I/O modules 241
place I/O modules
CompactLogix 5370 L1 controllers 174
select I/O modules
CompactLogix 5370 L1 controllers 151
CompactLogix 5370 L2 controllers 189
validate I/O modules layout
1734 POINT I/O modules 170-174
1769 Compact I/O modules 223-228
CompactLogix 5370 L1 controllers 170-174
CompactLogix 5370 L2 controllers 223-228
CompactLogix 5370 L3 controllers 246-254
system components
CompactLogix 5370 L1 controllers 18, 118
CompactLogix 5370 L2 controllers 40, 118
CompactLogix 5370 L3 controllers 62, 118
system dimensions
CompactLogix 5370 L1 controllers 26
CompactLogix 5370 L2 controllers 45
CompactLogix 5370 L3 controllers 72
system overhead time slice 285
configure 286
system power consumption
calculate
CompactLogix 5370 L1 controllers 174, 225
CompactLogix 5370 L3 controllers 249-251

T

tag
in project 275
task
continuous 270
event 175-178, 270
in project 268
periodic 270
priority 271
time slice 285

U

unscheduled
program 273
USB cable
CompactLogix 5370 L1 controllers 35
CompactLogix 5370 L2 controllers 57
CompactLogix 5370 L3 controllers 76

V

validate I/O modules layout
1734 POINT I/O modules 170-174
1769 Compact I/O modules 223-228, 246-254

W

wiring diagrams
CompactLogix 5370 L1 controllers 160

Rockwell Automation Support

Rockwell Automation provides technical information on the Web to assist you in using its products.
At http://www.rockwellautomation.com/support you can find technical and application notes, sample code, and links to software service packs. You can also visit our Support Center at https://rockwellautomation.custhelp.com/ for software updates, support chats and forums, technical information, FAQs, and to sign up for product notification updates.

In addition, we offer multiple support programs for installation, configuration, and troubleshooting. For more information, contact your local distributor or Rockwell Automation representative, or visit http://www.rockwellautomation.com/services/online-phone.

Installation Assistance

If you experience a problem within the first 24 hours of installation, review the information that is contained in this manual. You can contact Customer Support for initial help in getting your product up and running.

United States or Canada	1.440.646.3434
Outside United States or Canada	Use the Worldwide Locator at http://www.rockwellautomation.com/rockwellautomation/support/overview.page, or contact your local Rockwell Automation representative.

New Product Satisfaction Return

Rockwell Automation tests all of its products to help ensure that they are fully operational when shipped from the manufacturing facility. However, if your product is not functioning and needs to be returned, follow these procedures.

United States	Contact your distributor. You must provide a Customer Support case number (call the phone number above to obtain one) to your distributor to complete the return process.
Outside United States	Please contact your local Rockwell Automation representative for the return procedure.

Documentation Feedback

Your comments will help us serve your documentation needs better. If you have any suggestions on how to improve this document, complete this form, publication RA-DU002, available at http://www.rockwellautomation.com/literature/.

Rockwell Automation maintains current product environmental information on its website at
http://www.rockwellautomation.com/rockwellautomation/about-us/sustainability-ethics/product-environmental-compliance.page.

Rockwell Otomasyon Ticaret A.Ş., Kar Plaza İş Merkezi E Blok Kat:6 34752 İçerenköy, İstanbul, Tel: +90 (216) 5698400

www.rockwellautomation.com

Power, Control and Information Solutions Headquarters

Americas: Rockwell Automation, 1201 South Second Street, Milwaukee, WI 53204-2496 USA, Tel: (1) 414.382.2000, Fax: (1) 414.382.4444
Europe/Middle East/Africa: Rockwell Automation NV, Pegasus Park, De Kleetlaan 12a, 1831 Diegem, Belgium, Tel: (32) 2 663 0600, Fax: (32) 2 663 0640
Asia Pacific: Rockwell Automation, Level 14, Core F, Cyberport 3, 100 Cyberport Road, Hong Kong, Tel: (852) 2887 4788, Fax: (852) 2508 1846

Publication 1769-UM021E-EN-P - November 2014
Supersedes Publication 1769-UM021D-EN-P - December 2012

Copyright © 2014 Rockwell Automation, Inc. All rights reserved. Printed in the U.S.A.

THIS PAGE WAS INTENTIONALLY LEFT BLANK

THIS PAGE WAS INTENTIONALLY LEFT BLANK

Installation Instructions

Compact™ AC/DC Relay Output Module

(Catalog Number 1769-OW8, Series B)

Inside

Module Description 2
Module Installation 3
System Assembly 4
Mounting Expansion I/O 5
Replacing a Single Module within a System 7
Field Wiring Connections 8
I/O Memory Mapping 11
1769-OW8 Configuration File 12
Spare/Replacement Module Parts 13
Specifications 14
Hazardous Location Considerations 17
Environnements dangereux 17
For More Information 18

Publication 1769-IN051A-EN-P - April 2001

Module Description

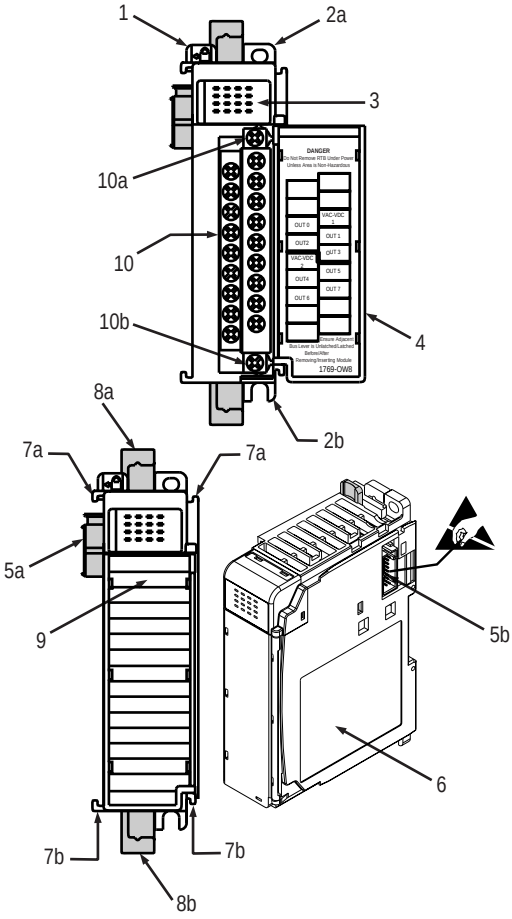

Item	Description
1	bus lever (with locking function)
2a	upper panel mounting tab
2b	lower panel mounting tab
3	I/O diagnostic LEDs
4	module door with terminal identification label
5a	movable bus connector with female pins
5b	stationary bus connector with male pins
6	nameplate label
7a	upper tongue-and-groove slots
7b	lower tongue-and-groove slots
8a	upper DIN rail latch
8b	lower DIN rail latch
9	write-on label (user ID tag)
10	removable terminal block (RTB) with finger-safe cover
10a	RTB upper retaining screw
10b	RTB lower retaining screw

Module Installation

Compact I/O is suitable for use in an industrial environment when installed in accordance with these instructions. Specifically, this equipment is intended for use in clean, dry environments (Pollution degree 2[1]) and to circuits not exceeding Over Voltage Category II[2] (IEC 60664-1).[3]

Prevent Electrostatic Discharge

ATTENTION

Electrostatic discharge can damage integrated circuits or semiconductors if you touch bus connector pins. Follow these guidelines when you handle the module:

- Touch a grounded object to discharge static potential.
- Wear an approved wrist-strap grounding device.
- Do not touch the bus connector or connector pins.
- Do not touch circuit components inside the module.
- If available, use a static-safe work station.
- When not in use, keep the module in its static-shield box.

Remove Power

ATTENTION

Remove power before removing or inserting this module. When you remove or insert a module with power applied, an electrical arc may occur. An electrical arc can cause personal injury or property damage by:

- sending an erroneous signal to your system's field devices, causing unintended machine motion
- causing an explosion in a hazardous environment

Electrical arcing causes excessive wear to contacts on both the module and its mating connector. Worn contacts may create electrical resistance.

(1) Pollution Degree 2 is an environment where, normally, only non-conductive pollution occurs except that occasionally a temporary conductivity caused by condensation shall be expected.
(2) Over Voltage Category II is the load level section of the electrical distribution system. At this level transient voltages are controlled and do not exceed the impulse voltage capability of the product's insulation.
(3) Pollution Degree 2 and Over Voltage Category II are International Electrotechnical Commission (IEC) designations.

System Assembly

The module can be attached to the controller or an adjacent I/O module *before* or *after* mounting. For mounting instructions, see "Panel Mounting" on page 5, or "DIN Rail Mounting" on page 7. To work with a system that is already mounted, see "Replacing a Single Module within a System" on page 7.

The following procedure shows you how to assemble the Compact I/O system.

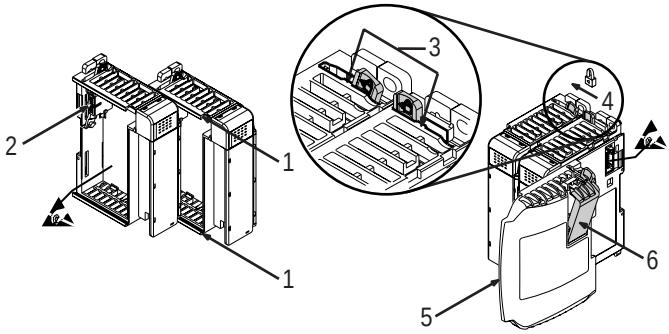

1. Disconnect power.
2. Check that the bus lever of the module to be installed is in the unlocked (fully right) position.
3. Use the upper and lower tongue-and-groove slots (1) to secure the modules together (or to a controller).
4. Move the module back along the tongue-and-groove slots until the bus connectors (2) line up with each other.
5. Push the bus lever back slightly to clear the positioning tab (3). Use your fingers or a small screw driver.
6. To allow communication between the controller and module, move the bus lever fully to the left (4) until it clicks. Ensure it is locked firmly in place.

ATTENTION

When attaching I/O modules, it is very important that the bus connectors are securely locked together to ensure proper electrical connection.

7. Attach an end cap terminator (5) to the last module in the system by using the tongue-and-groove slots as before.

8. Lock the end cap bus terminator (6).

IMPORTANT A 1769-ECR or 1769-ECL right or left end cap must be used to terminate the end of the serial communication bus.

Mounting Expansion I/O

ATTENTION During panel or DIN rail mounting of all devices, be sure that all debris (metal chips, wire strands, etc.) is kept from falling into the module. Debris that falls into the module could cause damage on power up.

Minimum Spacing

Maintain spacing from enclosure walls, wireways, adjacent equipment, etc. Allow 50 mm (2 in.) of space on all sides for adequate ventilation, as shown:

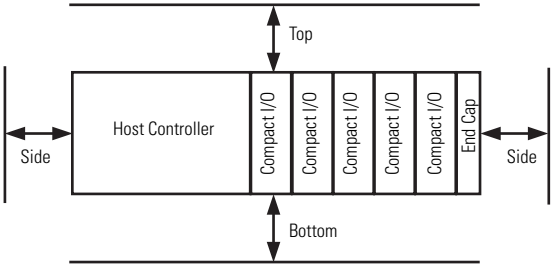

Panel Mounting

Mount the module to a panel using two screws per module. Use M4 or #8 panhead screws. Mounting screws are required on every module.

Panel Mounting Using the Dimensional Template

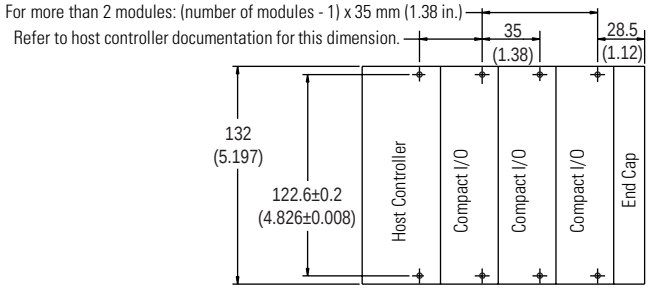

Note: All dimensions are in mm (inches). Hole spacing tolerance: ±0.4 mm (0.016 in.).

Panel Mounting Procedure Using Modules as a Template

The following procedure allows you to use the assembled modules as a template for drilling holes in the panel. If you have sophisticated panel mounting equipment, you can use the dimensional template provided on page 6. Due to module mounting hole tolerance, it is important to follow these procedures:

1. On a clean work surface, assemble no more than three modules.
2. Using the assembled modules as a template, carefully mark the center of all module-mounting holes on the panel.
3. Return the assembled modules to the clean work surface, including any previously mounted modules.
4. Drill and tap the mounting holes for the recommended M4 or #8 screw.
5. Place the modules back on the panel, and check for proper hole alignment.
6. Attach the modules to the panel using the mounting screws.

TIP

If mounting more modules, mount only the last one of this group and put the others aside. This reduces remounting time during drilling and tapping of the next group.

7. Repeat steps 1 to 6 for any remaining modules.

DIN Rail Mounting

The module can be mounted using the following DIN rails: 35 x 7.5 mm (EN 50 022 - 35 x 7.5) or 35 x 15 mm (EN 50 022 - 35 x 15).

Before mounting the module on a DIN rail, close the DIN rail latches. Press the DIN rail mounting area of the module against the DIN rail. The latches will momentarily open and lock into place.

Replacing a Single Module within a System

The module can be replaced while the system is mounted to a panel (or DIN rail).

1. Remove power. See important note on page 3.
2. On the module to be removed, remove the upper and lower mounting screws from the module (or open the DIN latches using a flat-blade or phillips style screw driver).
3. Move the bus lever to the right to disconnect (unlock) the bus.
4. On the right-side adjacent module, move its bus lever to the right (unlock) to disconnect it from the module to be removed.
5. Gently slide the disconnected module forward. If you feel excessive resistance, check that the module has been disconnected from the bus, and that both mounting screws have been removed (or DIN latches opened).

TIP

It may be necessary to rock the module slightly from front to back to remove it, or, in a panel-mounted system, to loosen the screws of adjacent modules.

6. Before installing the replacement module, be sure that the bus lever on the module to be installed, and on the right-side adjacent module are in the unlocked (fully right) position.
7. Slide the replacement module into the open slot.
8. Connect the modules together by locking (fully left) the bus levers on the replacement module and the right-side adjacent module.
9. Replace the mounting screws (or snap the module onto the DIN rail).

Field Wiring Connections

Grounding the Module

This product is intended to be mounted to a well-grounded mounting surface such as a metal panel. Additional grounding connections from the module's mounting tabs or DIN rail (if used), are not required unless the mounting surface cannot be grounded. Refer to *Industrial Automation Wiring and Grounding Guidelines*, Allen-Bradley publication 1770-4.1, for additional information. \

Output Wiring

Basic wiring[1] of output devices to the 1769-OW8 is shown below.

ATTENTION

Be careful when stripping wires. Wire fragments that fall into a module could cause damage at power up. Once wiring is complete, ensure the module is free of all metal fragments.

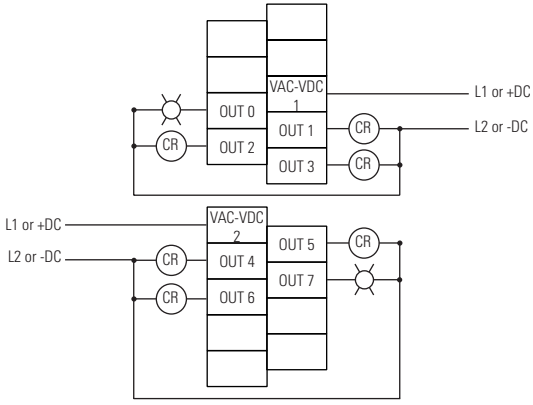

(1) **Surge Suppression** - Connecting surge suppressors across your external inductive load will extend the life of the relay contacts. For additional details, refer to Industrial Automation Wiring and Grounding Guidelines, Allen-Bradley publication 1770-4.1.

A removable, write-on label is provided with the module. Remove the label from the door, mark the identification of each terminal with permanent ink, and slide the label back into the door. Your markings (ID tag) will be visible when the module door is closed.

Removing the Finger-Safe Terminal Block

When wiring field devices to the module, it is not necessary to remove the terminal block. If you remove the terminal block, use the write-on label on the side of the terminal block to identify the module slot lcation and type.

To remove the terminal block, loosen the upper and lower retaining screws. The terminal block will back away from the module as you remove the screws. When replacing the terminal block, torque the retaining screws to 0.46 Nm (4.1 in-lbs).

Wiring the Finger-Safe Terminal Block

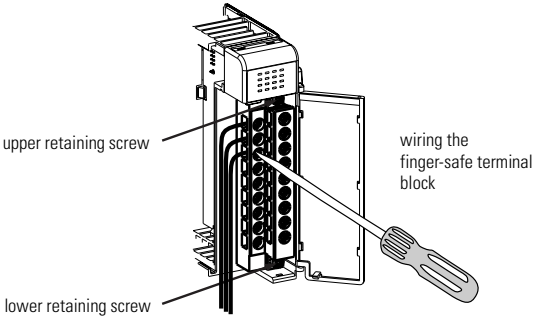

When wiring the terminal block, keep the finger-safe cover in place.

1. Loosen the terminal screws to be wired.

2. Route the wire under the terminal pressure plate. You can use the bare wire or a spade lug. The terminals will accept a 6.35 mm (0.25 in.) spade lug.

TIP

The terminal screws are non-captive. Therefore, it is possible to use a ring lug [maximum 1/4 inch o.d. with a 0.139 inch minimum i.d. (M3.5)] with the module.

3. Tighten the terminal screw making sure the pressure plate secures the wire. Recommended torque when tightening terminal screws is 0.68 Nm (6 in-lbs).

TIP

If you need to remove the finger-safe cover, insert a screw driver into one of the square, wiring holes and gently pry the cover off. If you wire the terminal block with the finger-safe cover removed, you will not be able to put it back on the terminal block because the wires will be in the way.

Simplified Output Circuit Diagram

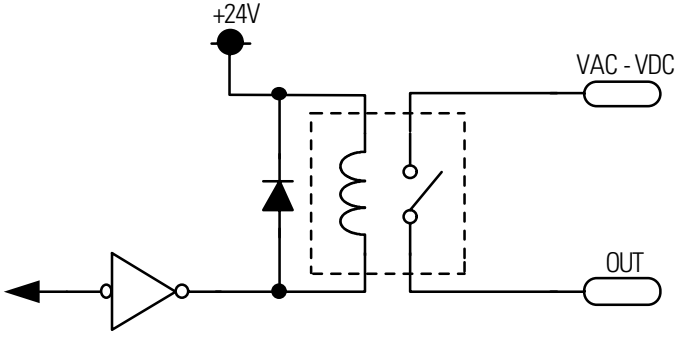

Wire Size and Terminal Screw Torque

Each terminal accepts up to two wires with the following restrictions:

Wire Type		Wire Size	Terminal Screw Torque	Retaining Screw Torque
Solid	Cu-90°C (194°F)	#14 to #22 AWG	0.68 Nm (6 in-lbs)	0.46 Nm (4.1 in-lbs)
Stranded	Cu-90°C (194°F)	#16 to #22 AWG	0.68 Nm (6 in-lbs)	0.46 Nm (4.1 in-lbs)

I/O Memory Mapping

Output Data File

For each module, slot x, word 0 in the output data file contains the control program's directed state of the discrete output points. For the 1769-OW8, bits 8 to 15 are not used.

Word	Bit Position															
	15	14	13	12	11	10	9	8	7	6	5	4	3	2	1	0
0	0	0	0	0	0	0	0	0	w	w	w	w	w	w	w	w

w = write

Output Module's Input Data File

For each module, slot x, input data file word 0 contains the state of the module's output data (output data echo) file word 0. During normal operation, these input bits represent the logic state that the outputs are directed to by the control program. They are also dependent upon the:

- Program Mode configuration (if supported by the controller)
- The Fault Mode configuration (if supported by the controller)

For the 1769-OW8, bits 8 to 15 are not used.

Word	Bit Position															
	15	14	13	12	11	10	9	8	7	6	5	4	3	2	1	0
0	0	0	0	0	0	0	0	0	r	r	r	r	r	r	r	r

r = read

IMPORTANT

The output module's input data file reflects the output data echo of the module, not necessarily the electrical state of the output terminals. It does not reflect shorted or open outputs.

It is important to use this input word if the controller adapter supports the Program Mode or Fault Mode function, and if it is configured to use them.

1769-OW8 Configuration File

The read/writable configuration data file allows the setup of the hold last state and user-defined safe state conditions.

The manipulation of the bits from this file is normally done with programming software (e.g. RSLogix 500, RSNetworx for DeviceNet, etc.) during initial configuration of the system. In that case, graphical screens are provided via the programmer to simplify configuration. However, some systems (e.g. 1769-ADN DeviceNet Adapter) also allow the bits to be altered as part of the control program using communication rungs. In that case, it is necessary to understand the bit arrangment.

Word	Bit Position															
	15	14	13	12	11	10	9	8	7	6	5	4	3	2	1	0
0	0	0	0	0	0	0	0	0	0	0	0	0	0	0	0	PFE
1	Program State for Output Array Word 0															
2	Program Value for Output Array Word 0															
3	Fault State for Output Array Word 0															
4	Fault Value for Output Array Word 0															

Program State Word

Word 1, the program state word, selects the hold last state or user-defined safe state condition for each individual output on a system transition from Run to Program.

Condition	Bit Setting
User-defined Safe State	0
Hold Last State	1

Program Value Word

The program value word, word 2, is used to program the user-defined safe state value (0=Off, 1=On). Each output is individually configurable for on or off.

Value	Bit Setting
Off	0
On	1

Fault State Word

Word 3, the fault state word, selects the hold last state or user-defined safe state condition for each individual output on a system transition from Run to Fault.

Condition	Bit Setting
User-defined Safe State	0
Hold Last State	1

Fault Value Word

The fault value word, word 4, is used to program the fault state value (0=Off, 1=On). Each output is individually configurable for on or off.

Value	Bit Setting
Off	0
On	1

Program to Fault Enable Bit (PFE)

Word 0, bit 0, allows the selection of which data value, the program or fault value, to apply to the output if a system in Program mode undergoes a system fault, resulting a change to Fault mode.

Value Applied	Bit Setting
Program	0
Fault	1

Module Default Condition

The modules default condition is all zeros, programming the conditions shown below.

Word or Bit Affected		Condition Applied
Word 0, Bit 0:	Program-to-Fault Enable	Program Value
Word 1:	Program State	User-defined Safe State
Word 2:	Program Value	Off
Word 3:	Fault State	User-defined Safe State
Word 4:	Fault Value	Off

Spare/Replacement Module Parts

- Terminal Block:1769-RTBN10 (1 per kit)
- Door Label:1769-RL1 (2 per kit)
- Door:1769-RD (2 per kit)

Specifications

General Specifications

Specification	Value
Dimensions	118 mm (height) x 87 mm (depth) x 35 mm (width) height including mounting tabs is 138 mm 4.65 in. (height) x 3.43 in (depth) x 1.38 in (width) height including mounting tabs is 5.43 in.
Approximate Shipping Weight (with carton)	280g (0.61 lbs.)
Storage Temperature	-40°C to +85°C (-40°F to +185°F)
Operating Temperature	0°C to +60°C (32°F to +140°F)
Operating Humidity	5% to 95% non-condensing
Operating Altitude	2000 meters (6561 feet)(1)
Vibration	Operating: 10 to 500 Hz, 5G, 0.030 inches maximum peak-to-peak Relay Operation: 2G
Shock	Operating: 30G panel mounted (20G DIN rail mounted) Relay Operation: 7.5G panel mounted (5G DIN rail mounted) Non-Operating: 40G panel mounted (30G DIN rail mounted)
Agency Certification	• C-UL certified (under CSA C22.2 No. 142) • UL 508 listed • CE and C-Tick compliant for all applicable directives
Hazardous Environment Class	Class I, Division 2, Hazardous Location, Groups A, B, C, D (UL 1604, C-UL under CSA C22.2 No. 213)
Radiated and Conducted Emissions	EN50081-2 Class A
Electrical /EMC:	*The module has passed testing at the following levels:*
ESD Immunity (IEC61000-4-2)	• 4kV contact, 8 kV air, 4 kV indirect
Radiated Immunity (IEC61000-4-3)	• 10 V/m, 80 to 1000 MHz, 80% amplitude modulation, +900 MHz keyed carrier
Fast Transient Burst (IEC61000-4-4)	• 2 kV, 5 kHz
Surge Immunity (IEC61000-4-5)	• 2 kV common mode, 1 kV differential mode
Conducted Immunity (IEC61000-4-6)	• 10V, 0.15 to 80 MHz(2)

(1) For operation above 2000 meters, consult the factory.
(2) Conducted Immunity frequency range may be 150 kHz to 30 MHz if the Radiated Immunity frequency range is 30 MHz to 1000 MHz.

Output Specifications

Specification	1769-OW8
Voltage Category	AC/DC normally open relay
Operating Voltage Range	5 to 265V ac 5 to 125V dc
Number of Outputs	8
Bus Current Draw (max.)	125 mA at 5V dc (0.625W) 100 mA at 24V dc (2.4W)
Heat Dissipation	2.83 Total Watts *(The Watts per point, plus the minimum Watts, with all points energized.)*
Signal Delay (max.) – resistive load	turn-on = 10 ms turn-off = 10 ms
Off-State Leakage (max.)	0 mA
On-State Current (min.)	10 mA at 5V dc
Continuous Current per Point (max.)	2.5A (Also see "Relay Contact Ratings" on page 16.)
Continuous Current per Common (max.)	8A
Continuous Current per Module (max.)	16A
Power Supply Distance Rating	8 (The module may not be more than 8 modules away from the power supply.)
Output Point to Bus Isolation	Verified by one of the following dielectric tests: 1836V ac for 1 sec. or 2596V dc for 1 sec. 265V ac working voltage (IEC Class 2 reinforced insulation)
Isolated Groups	Group 1: outputs 0 to 3 Group 2: outputs 4 to 7
Output Group to Output Group Isolation	Verified by one of the following dielectric tests: 1836V ac for 1 sec. or 2596V dc for 1 sec. 265V ac working voltage (basic insulation) 150V ac working voltage (IEC Class 2 reinforced insulation)
Vendor I.D. Code	1
Product Type Code	7
Product Code	86

Relay Contact Ratings

Volts (max.)	Continuous Amps per Point (max.)	Amperes(1)		Voltamperes		NEMA ICS 2-125
		Make	Break	Make	Break	
240V ac	2.5A	7.5A	0.75A	1800 VA	180 VA	C300
120V ac		15A	1.5A			
125V dc	1.0A	0.22A(2)		28 VA		R150
24V dc	2.0A	1.2A(2)		28 VA		—

(1) **Surge Suppression** - Connecting surge suppressors across your external inductive load will extend the life of the relay contacts. For additional details, refer to Industrial Automation Wiring and Grounding Guidelines, Allen-Bradley publication 1770-4.1.

(2) For dc voltage applications, the make/break ampere rating for relay contacts can be determined by dividing 28 VA by the applied dc voltage. For example, 28 VA/48V dc = 0.58A. For dc voltage applications less than 48V, the make/break ratings for relay contacts cannot exceed 2A.

Hazardous Location Considerations

This equipment is suitable for use in Class I, Division 2, Groups A, B, C, D or non-hazardous locations only. The following WARNING statement applies to use in hazardous locations.

WARNING

EXPLOSION HAZARD

- Substitution of components may impair suitability for Class I, Division 2.
- Do not replace components or disconnect equipment unless power has been switched off or the area is known to be non-hazardous.
- Do not connect or disconnect components unless power has been switched off or the area is known to be non-hazardous.
- This product must be installed in an enclosure.
- All wiring must comply with N.E.C. article 501-4(b).

Environnements dangereux

Cet équipement est conçu pour être utilisé dans des environnements de Classe 1, Division 2, Groupes A, B, C, D ou non dangereux. La mise en garde suivante s'applique à une utilisation dans des environnements dangereux.

AVERTISSEMENT

DANGER D'EXPLOSION

- La substitution de composants peut rendre cet équipement impropre à une utilisation en environnement de Classe 1, Division 2.
- Ne pas remplacer de composants ou déconnecter l'équipement sans s'être assuré que l'alimentation est coupée et que l'environnement est classé non dangereux.
- Ne pas connecter ou déconnecter des composants sans s'être assuré que l'alimentation est coupée ou que l'environnement est classé non dangereux.
- Ce produit doit être installé dans une armoire.

For More Information

For	Refer to this Document	Pub. No.
A more detailed description of how to install and use your Compact™ I/O with MicroLogix™ 1200 & 1500 programmable controller.	MicroLogix 1200 & 1500 Programmable Controllers User Manual	1764-UM001B-US-P
A more detailed description of how to install and use your Compact I/O with the 1769-ADN DeviceNet Adapter.	1769-ADN DeviceNet Adapter User Manual	1769-UM001A-US-P
A more detailed description of how to install and use your Compact I/O with the CompactLogix™ System.	CompactLogix System User Manual	1769-UM007C-EN-P
More information on proper wiring and grounding techniques.	Industrial Automation Wiring and Grounding Guidelines	1770-4.1

If you would like a manual, you can:

- download a free electronic version from the internet: **www.ab.com/micrologix** or **www.theautomationbookstore.com**
- purchase a printed manual by:
  - contacting your local distributor or Rockwell Automation representative
  - visiting **www.theautomationbookstore.com** and placing your order
  - calling 1.800.963.9548 (USA/Canada) or 001.330.725.1574 (Outside USA/Canada)

Compact, MicroLogix, CompactLogix, RSLogix and RSNetworx are trademarks of Rockwell Automation.
DeviceNet is a trademark of Open DeviceNet Vendor Association (ODVA).

Reach us now at www.rockwellautomation.com

Wherever you need us, Rockwell Automation brings together leading brands in industrial automation including Allen-Bradley controls, Reliance Electric power transmission products, Dodge mechanical power transmission components, and Rockwell Software. Rockwell Automation's unique, flexible approach to helping customers achieve a competitive advantage is supported by thousands of authorized partners, distributors and system integrators around the world.

Americas Headquarters, 1201 South Second Street, Milwaukee, WI 53201-2496, USA, Tel: (1) 414 382-2000, Fax: (1) 414-382-4444
European Headquarters SA/NV, Boulevard du Souverain 36, 1170 Brussels, Belgium, Tel: (32) 2 663 0600, Fax: (32) 2 663 0640
Asia Pacific Headquarters, 27/F Citicorp Centre, 18 Whitfield Road, Causeway Bay, Hong Kong, Tel: (852) 2887 4788, Fax: (852) 2508 1846

Rockwell Automation

Publication 1769-IN051A-EN-P - April 2001
Supersedes Publication 1769-IN003C-EN-P - June 2000

PN 40072-115-01 (A)

© 2001 Rockwell International Corporation. Printed in the U.S.A.

Rockwell Automation

Compact™ 120V ac Input Module

(Catalog Number 1769-IA16)

Installation Instructions

Inside

Module Description 3
Module Installation 4
System Assembly 5
Mounting Expansion I/O 6
Replacing a Single Module within a System 8
Field Wiring Connections 8
I/O Memory Mapping 11
Spare/Replacement Parts 11
Specifications 12
Hazardous Location Considerations 14
Environnements dangereux 14
For More Information 15

Publication 1769-IN006B-EN-P

Module Description

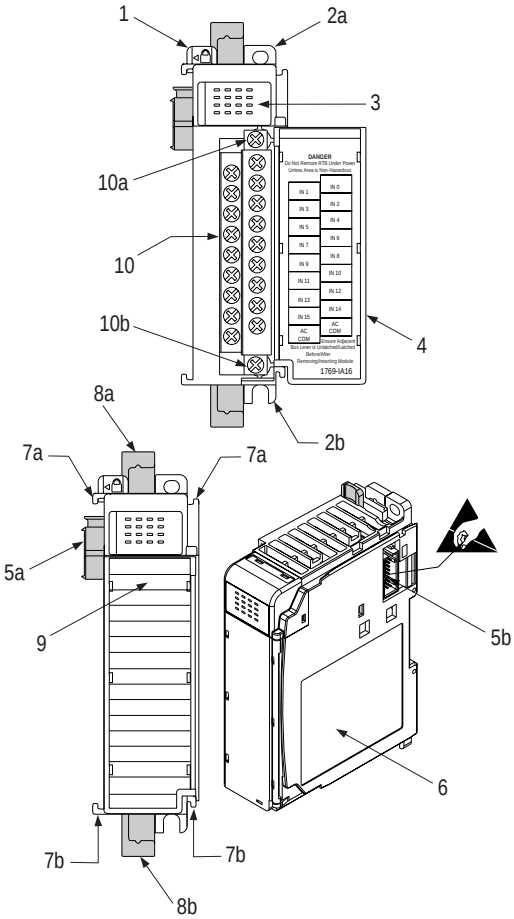

Item	Description
1	bus lever (with locking function)
2a	upper panel mounting tab
2b	lower panel mounting tab
3	I/O diagnostic LEDs
4	module door with terminal identification label
5a	movable bus connector with female pins
5b	stationary bus connector with male pins
6	nameplate label
7a	upper tongue-and-groove slots
7b	lower tongue-and-groove slots
8a	upper DIN rail latch
8b	lower DIN rail latch
9	write-on label (user ID tag)
10	removable terminal block (RTB) with finger-safe cover
10a	RTB upper retaining screw
10b	RTB lower retaining screw

Module Installation

Compact I/O is suitable for use in an industrial environment when installed in accordance with these instructions. Specifically, this equipment is intended for use in clean, dry environments (Pollution degree 2[1]) and to circuits not exceeding Over Voltage Category II[2] (IEC 60664-1).[3]

Prevent Electrostatic Discharge

ATTENTION: Electrostatic discharge can damage integrated circuits or semiconductors if you touch bus connector pins. Follow these guidelines when you handle the module:

- Touch a grounded object to discharge static potential.
- Wear an approved wrist-strap grounding device.
- Do not touch the bus connector or connector pins.
- Do not touch circuit components inside the module.
- If available, use a static-safe work station.
- When not in use, keep the module in its static-shield box.

Remove Power

ATTENTION: Remove power before removing or inserting this module. When you remove or insert a module with power applied, an electrical arc may occur. An electrical arc can cause personal injury or property damage by:

- sending an erroneous signal to your system's field devices, causing unintended machine motion
- causing an explosion in a hazardous environment

Electrical arcing causes excessive wear to contacts on both the module and its mating connector. Worn contacts may create electrical resistance.

1. Pollution Degree 2 is an environment where, normally, only non-conductive pollution occurs except that occasionally a temporary conductivity caused by condensation shall be expected.
2. Over Voltage Category II is the load level section of the electrical distribution system. At this level transient voltages are controlled and do not exceed the impulse voltage capability of the product's insulation.
3. Pollution Degree 2 and Over Voltage Category II are International Electrotechnical Commission (IEC) designations.

System Assembly

The module can be attached to the controller or an adjacent I/O module *before* or *after* mounting. For mounting instructions, see “Panel Mounting” on page 6, or “DIN Rail Mounting” on page 7. To work with a system that is already mounted, see “Replacing a Single Module within a System” on page 8.

The following procedure shows you how to assemble the Compact I/O system.

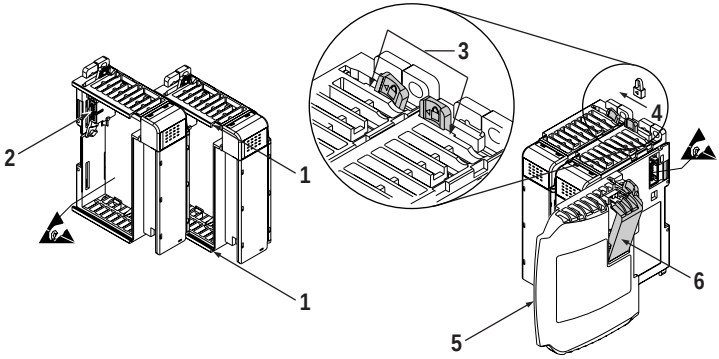

1. Disconnect power.
2. Check that the bus lever of the module to be installed is in the unlocked (fully right) position.
3. Use the upper and lower tongue-and-groove slots (1) to secure the modules together (or to a controller).
4. Move the module back along the tongue-and-groove slots until the bus connectors (2) line up with each other.
5. Push the bus lever back slightly to clear the positioning tab (3). Use your fingers or a small screw driver.
6. To allow communication between the controller and module, move the bus lever fully to the left (4) until it clicks. Ensure it is locked firmly in place.

ATTENTION: When attaching I/O modules, it is very important that the bus connectors are securely locked together to ensure proper electrical connection.

7. Attach an end cap terminator (5) to the last module in the system by using the tongue-and-groove slots as before.
8. Lock the end cap bus terminator (6).

IMPORTANT: A 1769-ECR or 1769-ECL right or left end cap must be used to terminate the end of the serial communication bus.

Mounting Expansion I/O

ATTENTION: During panel or DIN rail mounting of all devices, be sure that all debris (metal chips, wire strands, etc.) is kept from falling into the module. Debris that falls into the module could cause damage on power up.

Minimum Spacing

Maintain spacing from enclosure walls, wireways, adjacent equipment, etc. Allow 50 mm (2 in.) of space on all sides for adequate ventilation, as shown:

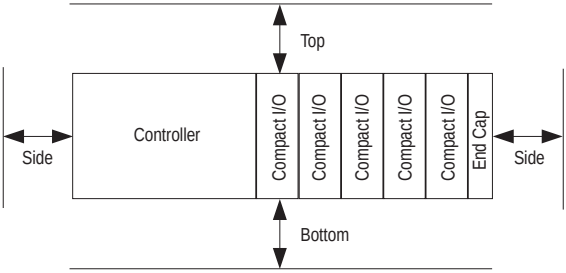

Panel Mounting

Mount the module to a panel using two screws per module. Use M4 or #8 panhead screws. Mounting screws are required on every module.

Panel Mounting Using the Dimensional Template

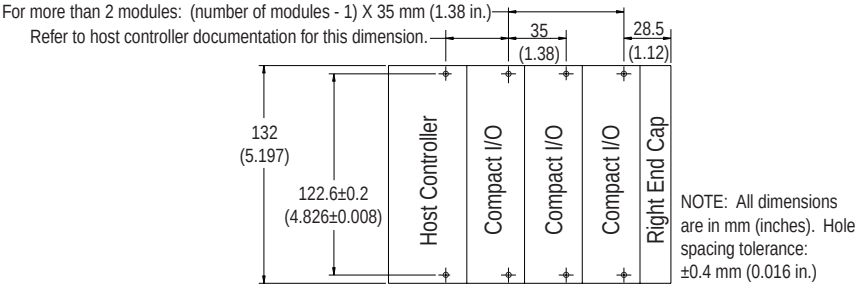

Panel Mounting Procedure Using Modules as a Template

The following procedure allows you to use the assembled modules as a template for drilling holes in the panel. If you have sophisticated panel mounting equipment, you can use the dimensional template provided on page 6. Due to module mounting hole tolerance, it is important to follow these procedures:

1. On a clean work surface, assemble no more than three modules.
2. Using the assembled modules as a template, carefully mark the center of all module-mounting holes on the panel.
3. Return the assembled modules to the clean work surface, including any previously mounted modules.
4. Drill and tap the mounting holes for the recommended M4 or #8 screw.
5. Place the modules back on the panel, and check for proper hole alignment.
6. Attach the modules to the panel using the mounting screws.

   Note: If mounting more modules, mount only the last one of this group and put the others aside. This reduces remounting time during drilling and tapping of the next group.
7. Repeat steps 1 to 6 for any remaining modules.

DIN Rail Mounting

The module can be mounted using the following DIN rails: 35 x 7.5 mm (EN 50 022 - 35 x 7.5) or 35 x 15 mm (EN 50 022 - 35 x 15).

Before mounting the module on a DIN rail, close the DIN rail latches. Press the DIN rail mounting area of the module against the DIN rail. The latches will momentarily open and lock into place.

Replacing a Single Module within a System

The module can be replaced while the system is mounted to a panel (or DIN rail).

1. Remove power. See important note on page 4.
2. On the module to be removed, remove the upper and lower mounting screws from the module (or open the DIN latches using a flat-blade or phillips style screw driver).
3. Move the bus lever to the right to disconnect (unlock) the bus.
4. On the right-side adjacent module, move its bus lever to the right (unlock) to disconnect it from the module to be removed.
5. Gently slide the disconnected module forward. If you feel excessive resistance, check that the module has been disconnected from the bus, and that both mounting screws have been removed (or DIN latches opened).

   Note: It may be necessary to rock the module slightly from front to back to remove it, or, in a panel-mounted system, to loosen the screws of adjacent modules.
6. Before installing the replacement module, be sure that the bus lever on the module to be installed, and on the right-side adjacent module are in the unlocked (fully right) position.
7. Slide the replacement module into the open slot.
8. Connect the modules together by locking (fully left) the bus levers on the replacement module and the right-side adjacent module.
9. Replace the mounting screws (or snap the module onto the DIN rail).

Field Wiring Connections

Grounding the Module

This product is intended to be mounted to a well-grounded mounting surface such as a metal panel. Additional grounding connections from the module's mounting tabs or DIN rail (if used), are not required unless the mounting surface cannot be grounded. Refer to *Industrial Automation Wiring and Grounding Guidelines*, Allen-Bradley publication 1770-4.1, for additional information.

Input Wiring

Basic wiring[1] of input devices to the 1769-IA16 is shown below.

ATTENTION: Be careful when stripping wires. Wire fragments that fall into a module could cause damage at power up. Once wiring is complete, ensure the module is free of all metal fragments.

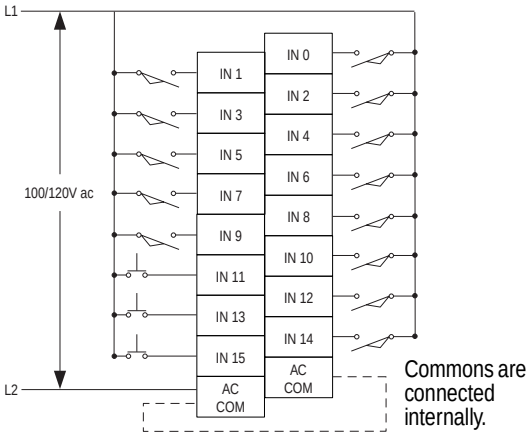

A removable, write-on label is provided with the module. Remove the label from the door, mark the identification of each terminal with permanent ink, and slide the label back into the door. Your markings (ID tag) will be visible when the module door is closed.

1. A current limiting resistor can be used to limit inrush current; however, the operating characteristics of the ac input circuit will be affected. If a 6.8K Ω resistor is placed in series with the input, the inrush current is reduced to 35 mA. In this configuration the minimum on-state voltage increases to 92V ac.

   Before adding the resistor in a hazardous environment, be sure to consider the operating temperature of the resistor and the temperature limits of the environment. The operating temperature of the resistor must remain below the temperature limit of the environment.

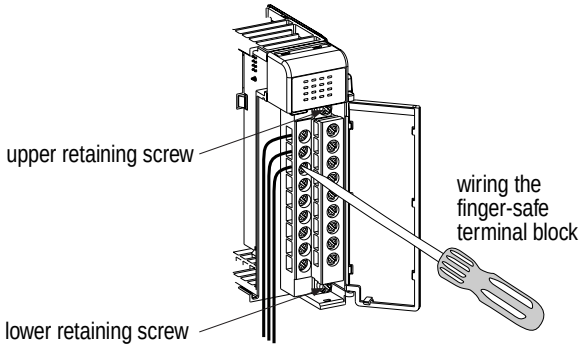

Removing the Finger-Safe Terminal Block

To remove the terminal block, loosen the upper and lower retaining screws. The terminal block will back away from the module as you remove the screws. When replacing the terminal block, torque the retaining screws to 0.46 Nm (4.1 in-lbs).

Wiring the Finger-Safe Terminal Block

When wiring the terminal block, keep the finger-safe cover in place.

1. Loosen the terminal screws to be wired.
2. Route the wire under the terminal pressure plate. You can use the bare wire or a spade lug. The terminals will accept a 6.35 mm (0.25 in.) spade lug.

Note: The terminal screws are non-captive. Therefore, it is possible to use a ring lug [maximum 1/4” o.d. with a 0.139” minimum i.d. (M3.5)] with the module.

3. Tighten the terminal screw making sure the pressure plate secures the wire. Recommended torque when tightening terminal screws is 0.68 Nm (6 in-lbs).

Note: If you need to remove the finger-safe cover, insert a screw driver into one of the square, wiring holes and gently pry the cover off. If you wire the terminal block with the finger-safe cover removed, you will not be able to put it back on the terminal block because the wires will be in the way.

Wire Size and Terminal Screw Torque

Each terminal accepts up to two wires with the following restrictions:

Wire Type		Wire Size	Terminal Screw Torque	Retaining Screw Torque
Solid	Cu-90°C (194°F)	#14 to #22 AWG	0.68 Nm (6 in-lbs)	0.46 Nm (4.1 in-lbs)
Stranded	Cu-90°C (194°F)	#16 to #22 AWG	0.68 Nm (6 in-lbs)	0.46 Nm (4.1 in-lbs)

I/O Memory Mapping

Input Data File

For each input module, slot x, word 0 in the input data file contains the current state of the field input points.

Word	Bit Position															
	15	14	13	12	11	10	9	8	7	6	5	4	3	2	1	0
0	r	r	r	r	r	r	r	r	r	r	r	r	r	r	r	r

r= read

Spare/Replacement Module Parts

- Terminal Block: 1769-RTBN18 (1 per kit)
- Door Label: 1769-RL1 (2 per kit)
- Door: 1769-RD (2 per kit)

Specifications

General Specifications

Specification	Value
Dimensions	118 mm (height) x 87 mm (depth) x 35 mm (width) height including mounting tabs is 138 mm 4.65 in. (height) x 3.43 in (depth) x 1.38 in (width) height including mounting tabs is 5.43 in.
Approximate Shipping Weight (with carton)	280g (0.61 lbs.)
Storage Temperature	-40°C to +85°C (-40°F to +185°F)
Operating Temperature	0°C to +60°C (32°F to +140°F)
Operating Humidity	5% to 95% non-condensing
Operating Altitude	2000 meters (6561 feet)
Vibration	Operating: 10 to 500 Hz, 5G, 0.030 inches maximum peak-to-peak Relay Operation: 2G
Shock	Operating: 30G panel mounted (20G DIN rail mounted) Relay Operation: 7.5G panel mounted (5G DIN rail mounted) Non-Operating: 40G panel mounted (30G DIN rail mounted)
Agency Certification	• C-UL certified (under CSA C22.2 No. 142) • UL 508 listed • CE compliant for all applicable directives
Hazardous Environment Class	Class I, Division 2, Hazardous Location, Groups A, B, C, D (UL 1604, C-UL under CSA C22.2 No. 213)
Radiated and Conducted Emissions	EN50081-2 Class A
Electrical /EMC:	*The module has passed testing at the following levels:*
• ESD Immunity (IEC1000-4-2)	• 4kV contact, 8 kV air, 4 kV indirect
• Radiated Immunity (IEC1000-4-3)	• 10 V/m, 80 to 1000 MHz, 80% amplitude modulation, +900 MHz keyed carrier
• Fast Transient Burst (IEC1000-4-4)	• 2 kV, 5 kHz
• Surge Immunity (IEC1000-4-5)	• 2 kV common mode, 1 kV differential mode
• Conducted Immunity (IEC1000-4-6)	• 10V, 0.15 to 80 MHz[1]

1. Conducted Immunity frequency range may be 150 kHz to 30 MHz if the Radiated Immunity frequency range is 30 MHz to 1000 MHz.

Input Specifications

Specification	1769-IA16
Voltage Category	100/120V ac
Operating Voltage Range	79V ac to 132V ac at 47 Hz to 63 Hz
Number of Inputs	16
Bus Current Draw (max.)	115 mA at 5V dc (0.575W)
Heat Dissipation	3.30 Total Watts *(The Watts per point, plus the minimum Watts, with all points energized.)*
Signal Delay (max.)	On Delay: 20.0 ms Off Delay: 20.0 ms
Off-State Voltage (max.)	20V ac
Off-State Current (max.)	2.5 mA
On-State Voltage (min.)	79V ac
On-State Current	5.0 mA at 79V ac (min.) 12 mA at 120V ac (nominal)
Inrush Current (max.)[1]	250 mA
Nominal Impedance	12K Ω at 50 Hz 10K Ω at 60 Hz
IEC Input Compatibility	Type 1+
Power Supply Distance Rating	8 (The module may not be more than 8 modules away from the power supply or controller.)
Input Point to Bus Isolation	Verified by one of the following dielectric tests: 1517V ac for 1 sec. or 2145V dc for 1 sec. 132V ac working voltage (IEC Class 2 reinforced insulation)
Isolated Groups	Group 1: inputs 0 to 15 (internally connected commons)
Vendor I.D. Code	1
Product Type Code	7
Product Code	82

1. A current limiting resistor can be used to limit inrush current; however, the operating characteristics of the ac input circuit will be affected. If a 6.8K Ω (2.5W minimum) resistor is placed in series with the input, the inrush current is reduced to 35 mA. In this configuration the minimum on-state voltage increases to 92V ac.
   Before adding the resistor in a hazardous environment, be sure to consider the operating temperature of the resistor and the temperature limits of the environment. The operating temperature of the resistor must remain below the temperature limit of the environment.

Hazardous Location Considerations

This equipment is suitable for use in Class I, Division 2, Groups A, B, C, D or non-hazardous locations only. The following ATTENTION statement applies to use in hazardous locations.

ATTENTION: EXPLOSION HAZARD

- Substitution of components may impair suitability for Class I, Division 2.
- Do not replace components or disconnect equipment unless power has been switched off or the area is known to be non-hazardous.
- Do not connect or disconnect components unless power has been switched off or the area is known to be non-hazardous.
- This product must be installed in an enclosure.
- All wiring must comply with N.E.C. article 501-4(b).

Environnements dangereux

Cet équipement est conçu pour être utilisé dans des environnements de Classe 1, Division 2, Groupes A, B, C, D ou non dangereux. La mise en garde suivante s’applique à une utilisation dans des environnements dangereux.

ATTENTION: DANGER D’EXPLOSION

- La substitution de composants peut rendre cet équipement impropre à une utilisation en environnement de Classe 1, Division 2.
- Ne pas remplacer de composants ou déconnecter l'équipement sans s'être assuré que l'alimentation est coupée et que l'environnement est classé non dangereux.
- Ne pas connecter ou déconnecter des composants sans s'être assuré que l'alimentation est coupée ou que l'environnement est classé non dangereux.
- Ce produit doit être installé dans une armoire.

For More Information

For	Refer to this Document	Pub. No.
A more detailed description of how to install and use your Compact I/O with MicroLogix 1200 & 1500 programmable controller.	*MicroLogix 1200 and MicroLogix 1500 Programmable Controllers User Manual*	1764-RM001B-US-P
A more detailed description of how to install and use your Compact I/O with the 1769-ADN DeviceNet Adapter.	*1769-ADN DeviceNet Adapter User Manual*	1769-UM001A-US-P
More information on proper wiring and grounding techniques.	*Industrial Automation Wiring and Grounding Guidelines*	1770-4.1

If you would like a manual, you can:

- download a free electronic version from the internet: **`www.ab.com/micrologix`** or **`www.theautomationbookstore.com`**
- purchase a printed manual by:
  - contacting your local distributor or Rockwell Automation representative
  - visiting **`www.theautomationbookstore.com`** and placing your order
  - calling **`1.800.9NEWLIT(800.963.9548)`** (USA/Canada) or **`001.330.725.1574`** (Outside USA/Canada)

Reach us now at www.rockwellautomation.com

Wherever you need us, Rockwell Automation brings together leading brands in industrial automation including Allen-Bradley controls, Reliance Electric power transmission products, Dodge mechanical power transmission components, and Rockwell Software. Rockwell Automation's unique, flexible approach to helping customers achieve a competitive advantage is supported by thousands of authorized partners, distributors and system integrators around the world.

Americas Headquarters, 1201 South Second Street, Milwaukee, WI 53204, USA, Tel: (1) 414 382-2000, Fax: (1) 414 382-4444
European Headquarters SA/NV, avenue Herrmann Debroux, 46, 1160 Brussels, Belgium, Tel: (32) 2 663 06 00, Fax: (32) 2 663 06 40
Asia Pacific Headquarters, 27/F Citicorp Centre, 18 Whitfield Road, Causeway Bay, Hong Kong, Tel: (852) 2887 4788, Fax: (852) 2508 1846

Rockwell Automation

Publication 1769-IN006B-EN-P - June 2000

PN 40071-095-01(B)

Supercedes 1769-IN006A-EN-P - April 2000
& 1769-5.1 - January 1999

© 2000 Rockwell International Corporation. All rights reserved. Printed in the U.S.A.

THIS PAGE WAS INTENTIONALLY LEFT BLANK

THIS PAGE WAS INTENTIONALLY LEFT BLANK

Allen-Bradley

Compact I/O Analog Modules

1769-IF4, -IF8, -OF2, -OF8C, and -OF8V

User Manual

Rockwell Automation

Important User Information

Solid state equipment has operational characteristics differing from those of electromechanical equipment. *Safety Guidelines for the Application, Installation and Maintenance of Solid State Controls* (Publication SGI-1.1 available from your local Rockwell Automation sales office or online at http://www.ab.com/manuals/gi) describes some important differences between solid state equipment and hard-wired electromechanical devices. Because of this difference, and also because of the wide variety of uses for solid state equipment, all persons responsible for applying this equipment must satisfy themselves that each intended application of this equipment is acceptable.

In no event will Rockwell Automation, Inc. be responsible or liable for indirect or consequential damages resulting from the use or application of this equipment.

The examples and diagrams in this manual are included solely for illustrative purposes. Because of the many variables and requirements associated with any particular installation, Rockwell Automation, Inc. cannot assume responsibility or liability for actual use based on the examples and diagrams.

No patent liability is assumed by Rockwell Automation, Inc. with respect to use of information, circuits, equipment, or software described in this manual.

Reproduction of the contents of this manual, in whole or in part, without written permission of Rockwell Automation, Inc. is prohibited.

Throughout this manual we use notes to make you aware of safety considerations.

WARNING

Identifies information about practices or circumstances that can cause an explosion in a hazardous environment, which may lead to personal injury or death, property damage, or economic loss.

IMPORTANT

Identifies information that is critical for successful application and understanding of the product.

ATTENTION

Identifies information about practices or circumstances that can lead to personal injury or death, property damage, or economic loss. Attentions help you:

- identify a hazard
- avoid a hazard
- recognize the consequence

SHOCK HAZARD

Labels may be located on or inside the drive to alert people that dangerous voltage may be present.

BURN HAZARD

Labels may be located on or inside the drive to alert people that surfaces may be dangerous temperatures.

The 1769-IF8, -OF8C, and -OF8V modules have been added to this manual since the last printing.

To help you find new and updated information in this release of the manual, we have included change bars as shown next to this paragraph.

Notes:

Preface

Who Should Use This Manual Preface-1
How to Use This Manual Preface-1
Manual Contents Preface-1
Related Documentation Preface-2
Conventions Used in This Manual Preface-2
Rockwell Automation Support Preface-3
Local Product Support Preface-3
Technical Product Assistance Preface-3
Your Questions or Comments on the Manual Preface-3

Chapter 1

Overview

How to Use Analog I/O 1-1
General Description 1-2
Hardware Features 1-3
General Diagnostic Features 1-5
System Overview 1-5
System Operation 1-6
Module Operation 1-7
Module Field Calibration 1-10

Chapter 2

Installation and Wiring

Compliance to European Union Directives 2-1
EMC Directive 2-1
Low Voltage Directive 2-1
Power Requirements 2-2
General Considerations 2-2
Hazardous Location Considerations 2-3
Prevent Electrostatic Discharge 2-3
Remove Power 2-4
Reducing Noise 2-4
Protecting the Circuit Board from Contamination 2-4
System Assembly 2-4
Mounting 2-6
Minimum Spacing 2-6
Panel Mounting 2-7
DIN Rail Mounting 2-8
Replacing a Single Module within a System 2-9
External Power Switch 2-10

Field Wiring Connections 2-10
Grounding 2-10
System Wiring Guidelines 2-11
Labeling the Terminals 2-15
Removing the Finger-Safe Terminal Block 2-15
Wiring the Finger-Safe Terminal Block 2-16
Wiring the Modules 2-17
Terminal Door Label 2-18
Analog Input Modules Wiring. 2-19
Analog Output Modules Wiring 2-24

Chapter 3

Module Data, Status, and Channel Configuration for the Input Modules

1769-IF4 Input Module Addressing 3-1
1769-IF4 Input Image 3-2
1769-IF4 Configuration File 3-2
1769-IF4 Input Data File. 3-2
1769-IF4 Input Data Values 3-3
1769-IF4 Configuration Data File. 3-4
Channel Configuration 3-5
Enable/Disable Channel 3-6
Input Filter Selection 3-6
Input Type/Range Selection 3-9
Input Data Selection Formats 3-10
Effective Resolution 3-13
1769-IF8 Input Module Addressing 3-16
1769-IF8 Input Image 3-17
1769-IF8 Output Image. 3-17
1769-IF8 Configuration File 3-17
1769-IF8 Input Data File. 3-18
1769-IF8 Input Data Values 3-18
1769-IF8 Output Data File 3-20
1769-IF8 Configuration Data File. 3-20
Channel Configuration 3-22
Enable/Disable Channel 3-23
Input Filter Selection 3-23
Input Type/Range Selection 3-27
Input Data Selection Formats 3-27
1769-IF8 Real Time Sampling. 3-29
1769-IF8 Process Alarms 3-30

Chapter 4

Module Data, Status, and Channel Configuration for the Output Modules

1769-OF2 Output Module Memory Map 4-1
1769-OF2 Output Data File 4-2
1769-OF2 Input Data File 4-2
1769-OF2 Diagnostic Bits (D0 and D1) 4-2
1769-OF2 Hold Last State Bits (H0 and H1) 4-2
1769-OF2 Over-Range Flag Bits (O0 and O1) 4-3
1769-OF2 Under-Range Flag Bits (U0 and U1) 4-3
1769-OF2 General Status Bits (S0 and S1) 4-3
1769-OF2 Output Data Loopback/Echo 4-4
1769-OF2 Configuration Data File 4-5
1769-OF2 Channel Configuration 4-6
1769-OF2 Enable/Disable Channel 4-7
1769-OF2 Output Data Format Selection 4-7
1769-OF2 Output Type/Range Selection 4-8
1769-OF2 Fault Mode (FM0 and FM1) 4-8
1769-OF2 Program/Idle Mode (PM0 and PM1) 4-9
1769-OF2 Program/Idle to Fault Enable (PFE0 and PFE1) . . 4-10
1769-OF2 Fault Value (Channel 0 and 1) 4-11
1769-OF2 Program/Idle Value (Channel 0 and 1) 4-11
1769-OF2 Module Resolution 4-15
1769-OF8C Output Module Memory Map 4-16
1769-OF8V Output Module Memory Map 4-17
1769-OF8C and -OF8V Output Data File 4-18
Channel Alarm Unlatch 4-18
1769-OF8C and -OF8V Input Data File 4-19
1769-OF8C and -OF8V Data Values 4-19
1769-OF8C and -OF8V Output Data Loopback/Echo 4-21
1769-OF8C and -OF8V Configuration Data File 4-22
1769-OF8C and -OF8V Channel Configuration 4-24
1769-OF8C and -OF8V Enable/Disable Channel 4-25
Clamping/Limiting 4-25
Clamp/Limit Alarms 4-26
Ramping 4-26
Hold for Initialization 4-28
Open Wire Detection (1769-OF8C Only) 4-29
1769-OF8C and -OF8V Fault Mode (FM) 4-29
1769-OF8C and -OF8V Program/Idle Mode (PM) 4-30
1769-OF8C and -OF8V Program/Idle to Fault Enable (PFE). 4-31
1769-OF8C and -OF8V Fault Value 4-31
1769-OF8C and -OF8V Program/Idle Value 4-32

Module Diagnostics and Troubleshooting

Chapter 5

Safety Considerations 5-1
Indicator Lights 5-1
Activating Devices When Troubleshooting 5-1
Stand Clear of the Machine 5-2
Program Alteration 5-2
Safety Circuits. 5-2
Module Operation vs. Channel Operation 5-2
Power-up Diagnostics 5-3
Channel Diagnostics. 5-3
Out-of-Range Detection (Input and Output Modules) 5-3
Open-Circuit Detection (Input Modules Only) 5-3
Output Wire Broken/High Load Resistance (Output Modules Only) 5-4
Non-critical vs. Critical Module Errors. 5-4
Module Error Definition Table 5-4
Module Error Field 5-5
Extended Error Information Field 5-5
Error Codes 5-6
Module Inhibit Function 5-12
Contacting Rockwell Automation 5-12

Specifications

Appendix A

General Specifications for 1769-IF4, -IF8, -OF2, -OF8C, and -OF8V Modules A-1
1769-IF4 Input Specifications A-3
1769-IF8 Input Specifications A-5
1769-OF2 Output Specifications. A-7
1769-OF8C Output Specifications A-9
1769-OF8V Output Specifications A-11

Module Addressing and Configuration with MicroLogix 1500

Appendix B

Input Module Addressing B-1
Input Modules Input Image B-2
Input Modules' Configuration File B-3
Configuring Analog I/O Modules in a MicroLogix 1500 System . . . B-4
Configuring the Input Modules. B-6
Configuring the Output Modules B-7

Configuration Using the RSLogix 5000 Generic Profile for CompactLogix Controllers

Appendix C

Configuring I/O Modules C-6
Configuring Analog Output Modules. C-7
Configuring Analog Input Modules C-7

Appendix D

Configuring Modules in a Remote DeviceNet System with a 1769-ADN DeviceNet Adapter

Overview. D-1
Add the DeviceNet Adapter to the Scanlist D-2
Configure the 1769-IF4 Input Module Example D-4
1769-IF4 Example of External Power D-6
Configure the 1769-OF8C Output Module Example D-7
1769-OF8C Example of External Power D-8
1769-OF8C Example of Output Channels. D-9

Appendix E

Two's Complement Binary Numbers

Positive Decimal Values. E-1
Negative Decimal Values E-2

Glossary

Read this preface to familiarize yourself with the rest of the manual. This preface covers the following topics:

- who should use this manual
- how to use this manual
- related publications
- conventions used in this manual
- Rockwell Automation support

Who Should Use This Manual

Use this manual if you are responsible for designing, installing, programming, or troubleshooting control systems that use Allen-Bradley Compact™ I/O.

How to Use This Manual

As much as possible, we organized this manual to explain, in a task-by-task manner, how to install, configure, program, operate and troubleshoot a control system using the 1769 analog I/O modules.

Manual Contents

If you want...	See
An overview of the analog input and output modules	Chapter 1
Installation and wiring guidelines	Chapter 2
Input module addressing, configuration and status information	Chapter 3
Output module addressing, configuration and status information	Chapter 4
Information on module diagnostics and troubleshooting	Chapter 5
Specifications for the input and output modules	Appendix A
Information on addressing and configuration using MicroLogix 1500 and RSLogix 500	Appendix B
Information on configuring the module using CompactLogix and RSLogix 5000	Appendix C
Information on configuring the module using 1769-ADN DeviceNet Adapter and RSNetWorx	Appendix D
Information on understanding two's complement binary numbers	Appendix E
Definitions of terms used in this manual	Glossary

Related Documentation

The table below provides a listing of publications that contain important information about MicroLogix 1500 systems.

For	Read this document	Document number
A user manual containing information on how to install, use and program your MicroLogix 1500 controller.	MicroLogix™ 1500 User Manual	1764-UM001
A user manual containing information on how to install, and use your 1769-ADN DeviceNet Adapter.	DeviceNet Adapter User Manual	1769-UM001
A user manual containing information on how to install, use and program your CompactLogix controller.	CompactLogix User Manual	1769-UM007
An overview of 1769 Compact Discrete I/O modules	1769 Compact Discrete Input/Output Modules Product Data	1769-2.1
An overview of the MicroLogix 1500 System, including 1769 Compact I/O.	MicroLogix™ 1500 System Overview	1764-SO001
In-depth information on grounding and wiring Allen-Bradley programmable controllers.	Allen-Bradley Programmable Controller Grounding and Wiring Guidelines	1770-4.1

If you would like a manual, you can:

- download a free electronic version from the internet at **www.ab.com/literature**
- purchase a printed manual by:
  - contacting your local distributor or Rockwell Automation representative
  - calling 1.800.963.9548 (USA/Canada) or 001.330.725.1574 (Outside USA/Canada)

Conventions Used in This Manual

The following conventions are used throughout this manual:

- Bulleted lists (like this one) provide information not procedural steps.
- Numbered lists provide sequential steps or hierarchical information.
- *Italic* type is used for emphasis.
- Text in this `font` indicates words or phrases you should type.

Rockwell Automation Support

Rockwell Automation offers support services worldwide, with over 75 Sales/Support Offices, 512 authorized distributors and 260 authorized Systems Integrators located throughout the United States alone, plus Rockwell Automation representatives in every major country in the world.

Local Product Support

Contact your local Rockwell Automation representative for:

- sales and order support
- product technical training
- warranty support
- support service agreement

Technical Product Assistance

If you need to contact Rockwell Automation for technical assistance, please review the information in Chapter 5, *Module Diagnostics and Troubleshooting* first. Then call your local Rockwell Automation representative.

Your Questions or Comments on the Manual

If you find a problem with this manual, please notify us. If you have any suggestions for how this manual could be made more useful to you, please contact us at the address below:

Rockwell Automation
Automation Control and Information Group
Technical Communication, Dept. A602V
P.O. Box 2086
Milwaukee, WI 53201-2086

Notes:

Overview

This chapter explains how analog data is used, and describes the 1769-IF4 and -IF8 analog input modules and the 1769-OF2, -OF8C, and -OF8V analog output modules. Included is information about:

- the use of analog I/O
- the modules' hardware and diagnostic features
- an overview of the 1769 analog input system operation
- an overview of the 1769 analog output system operation

How to Use Analog I/O

Analog refers to the representation of numerical quantities by the measurement of continuous physical variables. Analog applications are present in many forms. The following application shows a typical use of analog data.

In this application, the processor controls the amount of fluid in a holding tank by adjusting the valve opening. The valve is initially open 100%. As the fluid level in the tank approaches the preset point, the processor modifies the output to close the valve 90%, 80%, and so on, continuously adjusting the valve to maintain the fluid level.

Figure 1.1 Analog I/O Application Example

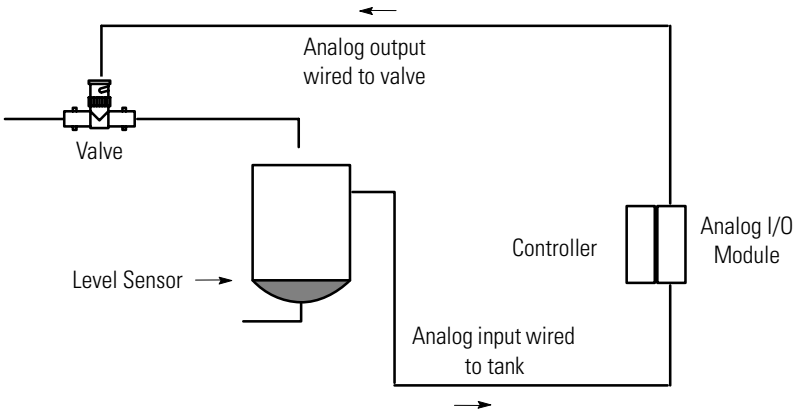

General Description

The 1769-IF4 and -IF8 analog input modules convert and digitally store analog data for retrieval by controllers, such as the CompactLogix™ or MicroLogix™ 1500. The module supports connections from any combination of up to four voltage or current analog sensors for the 1769-IF4 and up to eight for the 1769-IF8. The high-impedance input channels can be wired as either single-ended or differential inputs.

The 1769-OF2 output module provides two single-ended analog output channels, each individually configurable for voltage or current. The 1769-OF8C and -OF8V output modules each provide eight single-ended analog output channels.

Both modules provide the following input/output types/ranges:

Table 1.1 Normal and Full Ranges

Normal Operating Input Range	Full Module Range
±10V dc	± 10.5V dc
1 to 5V dc	0.5 - 5.25V dc
0 to 5V dc	-0.5 - +5.25V dc
0 to 10V dc	-0.5 - +10.5V dc
0 to 20 mA	0 - 21 mA
4 to 20 mA	3.2 - 21 mA

The data can be configured on board each module as:

- Engineering Units
- Scaled-for-PID
- Percent
- Raw/Proportional Data

Hardware Features

The modules contain removable terminal blocks. The 1769-IF4 and -IF8 channels can be wired as either single-ended or differential inputs. The 1769-OF2, -OF8C, and -OF8V channels are single-ended only. Module configuration is normally done via the controller's programming software. In addition, some controllers support configuration via the user program. In either case, the module configuration is stored in the memory of the controller. Refer to your controller's user manual for more information.

Figure 1.2 1769-OF2, -OF8C, -OF8V and -IF4 Analog Module's Hardware Features

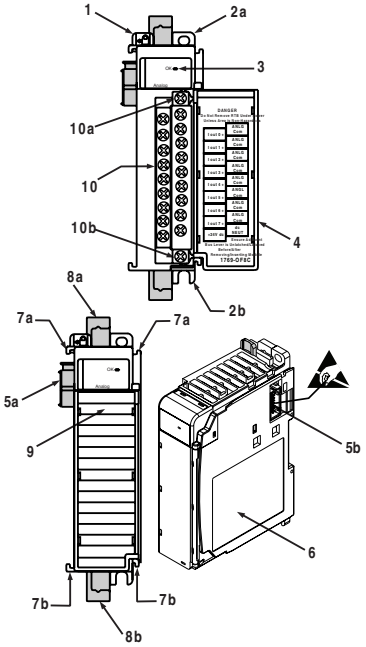

Table 1.2 1769-OF2, -OF8C, -OF8V, and -IF4 Feature Descriptions

Item	Description
1	bus lever (with locking function)
2a	upper panel mounting tab
2b	lower panel mounting tab
3	module status LEDs
4	module door with terminal identification label
5a	movable bus connector with female pins
5b	stationary bus connector with male pins
6	nameplate label
7a	upper tongue-and-groove slots
7b	lower tongue-and-groove slots
8a	upper DIN rail latch
8b	lower DIN rail latch
9	write-on label for user identification tags
10	removable terminal block (RTB) with finger-safe cover
10a	RTB upper retaining screw
10b	RTB lower retaining screw

Figure 1.3 1769-IF8 Analog Module's Hardware Features

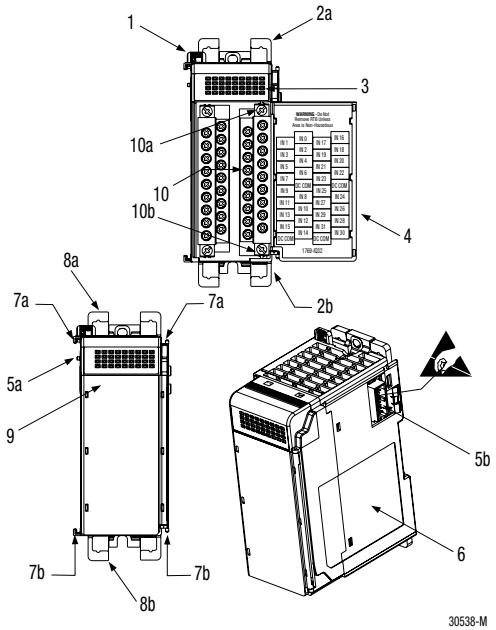

Table 1.3 1769-IF8 Feature Descriptions

Item	Description
1	bus lever (with locking function)
2a	upper panel mounting tab
2b	lower panel mounting tab
3	I/O diagnostic LEDs
4	module door with terminal identification label
5a	movable bus connector with female pins
5b	stationary bus connector with male pins
6	nameplate label
7a	upper tongue-and-groove slots
7b	lower tongue-and-groove slots
8a	upper DIN rail latch
8b	lower DIN rail latch
9	write-on label for user identification tags
10	removable terminal block (RTB) with finger-safe cover
10a	RTB upper retaining screw
10b	RTB lower retaining screw

General Diagnostic Features

The analog modules contain diagnostic features that can help you identify the source of problems that may occur during power-up or during normal channel operation. These power-up and channel diagnostics are explained in chapter 6, *Module Diagnostics and Troubleshooting*.

System Overview

The modules communicate to the controller through the bus interface. The modules also receive 5 and 24V dc power through the bus interface. The 1769-IF4, -OF2, -OF8C, and -OF8V modules feature an external 24V dc power switch, providing you with the option of using an external power supply. See External Power Switch on page 2-10 for details.

You can install as many analog modules as your power supply can support. However, the modules have a power supply distance rating of 8, which means that they may not be located more than 8 modules away from the system power supply.

Figure 1.4 Determine Power Supply Distance

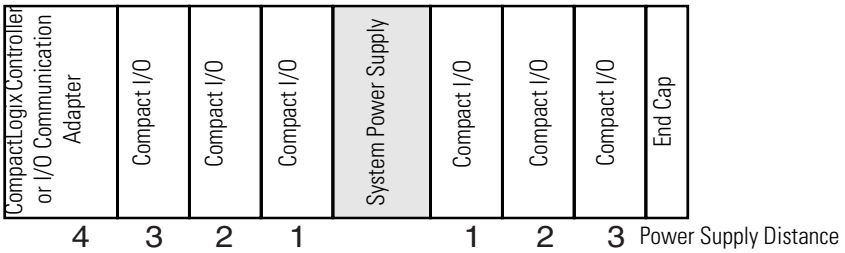

OR

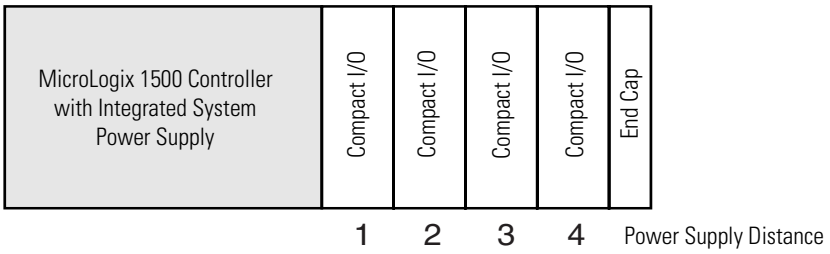

System Operation

At power-up, the module performs a check of its internal circuits, memory, and basic functions. During this time, the module status LED remains off. If no faults are found during power-up diagnostics, the module status LED is turned on.

After power-up checks are complete, the module waits for valid channel configuration data. If an invalid configuration is detected, the module generates a configuration error. Once a channel is properly configured and enabled, it begins the analog-to-digital or digital-to-analog conversion process.

Input Modules

Each time a channel is read by the input modules, that analog data value is tested by the modules for an over-range or under-range condition. If such a condition is detected, a unique bit is set in the channel status word. The channel status word is described in 1769-IF4 Input Data File on page 3-2 and 1769-IF8 Input Data File on page 3-18.

The controller reads the two's complement binary converted analog data from the modules. This typically occurs at the end of the program scan or when commanded by the control program. If the controller and the modules determine that the bus data transfer was made without error, the data is used in your control program.

Output Modules

The output modules monitor channels for over-range and under-range conditions and also for broken output wires and high load resistance (in current mode only). If such a condition is detected, a unique bit is set in the channel status word. The channel status word is described in 1769-OF2 Output Data File on page 4-2 and 1769-OF8C and -OF8V Output Data File on page 4-18.

The output module receives two's complement binary values from the bus master. This typically occurs at the end of the program scan or when commanded by the control program. If the controller and the module determine that the bus transfer was completed without error, the output module converts the data to an analog output signal.

Module Operation

Input Module Block Diagram

The input module's input circuitry consists of four differential analog inputs multiplexed into a single analog-to-digital (A/D) converter. The A/D converter reads the selected input signal and converts it to a digital value which is presented to the controller. The multiplexer sequentially switches each input channel to the module's A/D converter.

Figure 1.5 1769-IF4 Block Diagram

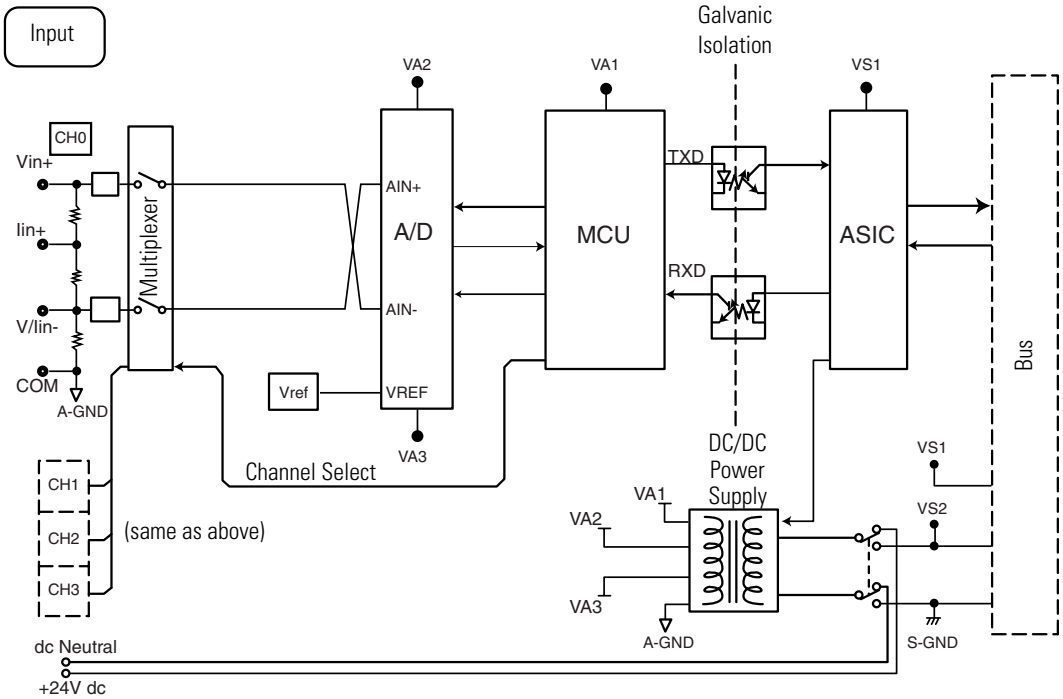

Figure 1.6 1769-IF8 Block Diagram

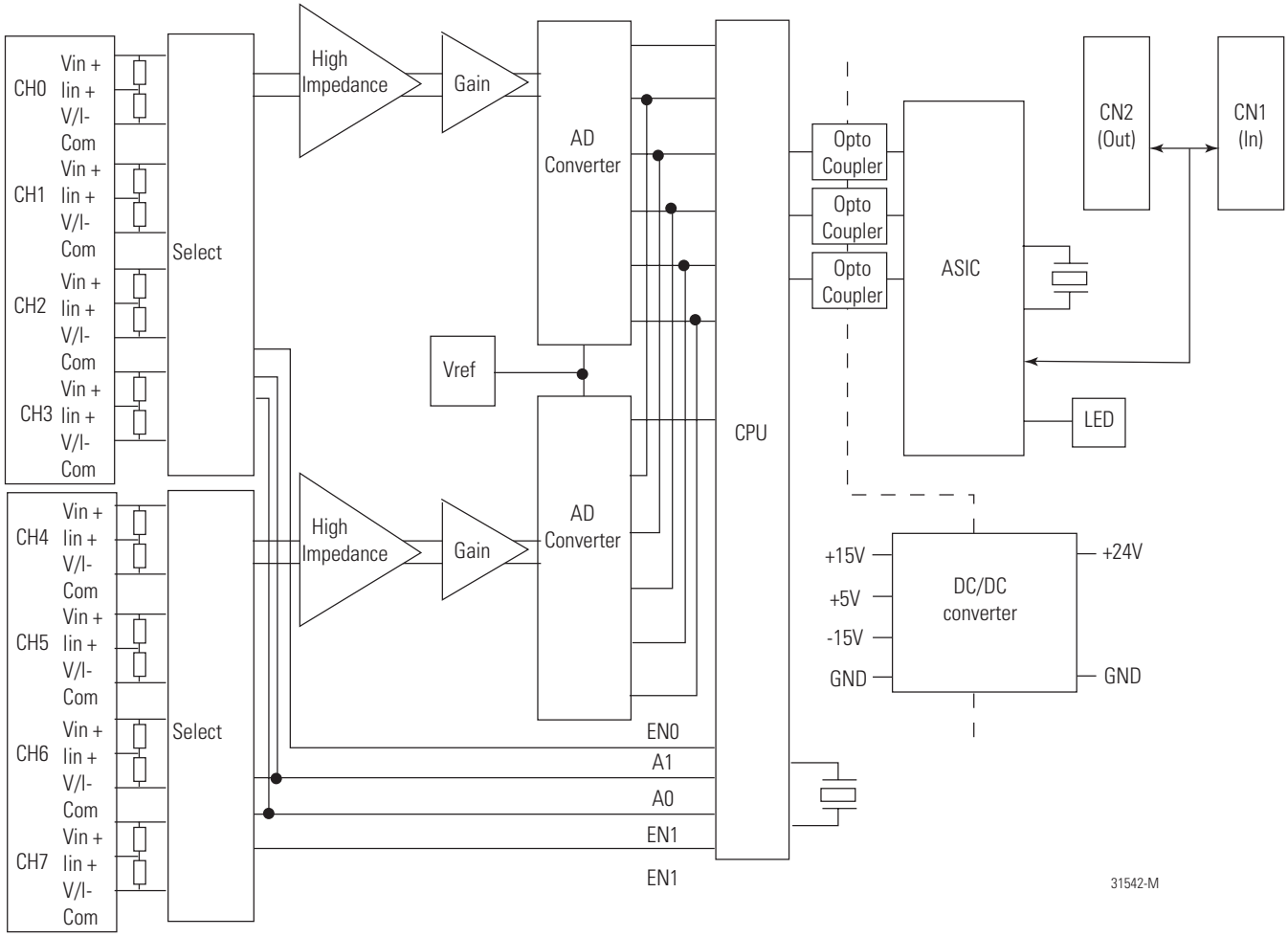

Output Module Block Diagram

The output module uses a digital-to-analog (D/A) converter to read the digital output data from the controller and convert it to an analog output signal.

Figure 1.7 1769-OF2 Block Diagram

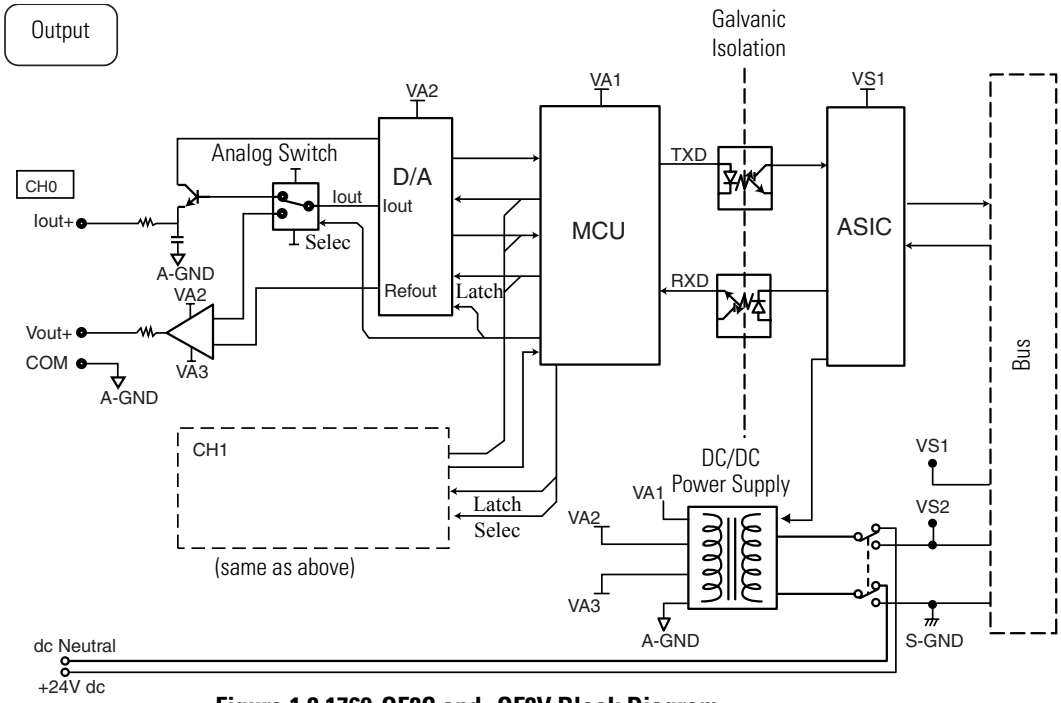

Figure 1.8 1769-OF8C and -OF8V Block Diagram

The following diagram shows only one of eight outputs. For each analog output, only one of the sections shown in broken-line boxes is implemented. The 1769-OF8C module uses only the Current Out section while the 1769-OF8V module uses only the Voltage Out section.

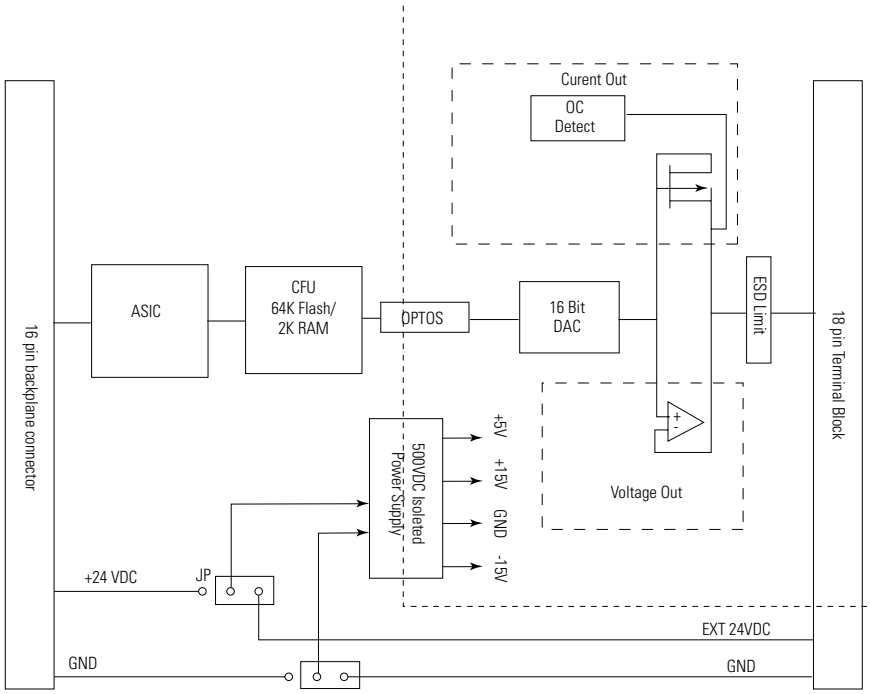

Module Field Calibration

The 1769-IF4 and -IF8 input modules performs autocalibration when a channel is initially enabled. In addition, if a channel is configured differently than the previously scanned channel, an autocalibration cycle is run as part of the reconfiguration process.

The 1769-OF2, -OF8C, and -OF8V output modules's calibration is guaranteed by its design. No field calibration is required.

Installation and Wiring

This chapter tells you how to:

- determine the power requirements for the modules
- avoid electrostatic damage
- install the module
- wire the module's terminal block
- wire input devices
- wire output devices

Compliance to European Union Directives

This product is approved for installation within the European Union and EEA regions. It has been designed and tested to meet the following directives.

EMC Directive

The analog modules are tested to meet Council Directive 89/336/EEC Electromagnetic Compatibility (EMC) and the following standards, in whole or in part, documented in a technical construction file:

- EN 50081-2
  EMC – Generic Emission Standard, Part 2 - Industrial Environment

- EN 50082-2
  EMC – Generic Immunity Standard, Part 2 - Industrial Environment

This product is intended for use in an industrial environment.

Low Voltage Directive

This product is tested to meet Council Directive 73/23/EEC Low Voltage, by applying the safety requirements of EN 61131-2 Programmable Controllers, Part 2 – Equipment Requirements and Tests.

For specific information required by EN61131-2, see the appropriate sections in this publication, as well as the following Allen-Bradley publications:

- *Industrial Automation, Wiring and Grounding Guidelines for Noise Immunity*, publication 1770-4.1
- *Automation Systems Catalog*, publication B113

Power Requirements

The modules receive power through the bus interface from the +5V dc/+24V dc system power supply. Some modules can also be supplied 24V dc power by an external power supply connected to the module's terminal block.

Table 2.1 Maximum Current Draw

Module	5V dc	24V dc
1769-IF4 (Series A)	120 mA	Not applicable
1769-IF4 (Series B)		60 mA[1]
1769-IF8 (Series A)		70 mA
1769-OF2 (Series A)	120 mA	Not applicable
1769-OF2 (Series B)		120 mA[1]
1769-OF8C (Series A)	145 mA	160 mA[1]
1769-OF8V (Series A)		125 mA[1]

(1) If the optional 24V dc Class 2 power supply is used, the 24V dc current draw from the bus is 0 mA.

General Considerations

Compact I/O is suitable for use in an industrial environment when installed in accordance with these instructions. Specifically, this equipment is intended for use in clean, dry environments (Pollution degree 2[1]) and to circuits not exceeding Over Voltage Category II[2] (IEC 60664-1).[3]

(1) Pollution Degree 2 is an environment where, normally, only non-conductive pollution occurs except that occasionally a temporary conductivity caused by condensation shall be expected.

(2) Over Voltage Category II is the load level section of the electrical distribution system. At this level transient voltages are controlled and do not exceed the impulse voltage capability of the product's insulation.

(3) Pollution Degree 2 and Over Voltage Category II are International Electrotechnical Commission (IEC) designations.

Hazardous Location Considerations

This equipment is suitable for use in Class I, Division 2, Groups A, B, C, D or non-hazardous locations only. The following WARNING statement applies to use in hazardous locations.

ATTENTION

EXPLOSION HAZARD

- Substitution of components may impair suitability for Class I, Division 2.
- Do not replace components or disconnect equipment unless power has been switched off or the area is known to be non-hazardous.
- Do not connect or disconnect components unless power has been switched off or the area is known to be non-hazardous.
- This product must be installed in an enclosure.
- All wiring must comply with N.E.C. article 501-4(b).

Prevent Electrostatic Discharge

ATTENTION

Electrostatic discharge can damage integrated circuits or semiconductors if you touch analog I/O module bus connector pins or the terminal block on the input module. Follow these guidelines when you handle the module:

- Touch a grounded object to discharge static potential.
- Wear an approved wrist-strap grounding device.
- Do not touch the bus connector or connector pins.
- Do not touch circuit components inside the module.
- If available, use a static-safe work station.
- When it is not in use, keep the module in its static-shield box.

Remove Power

ATTENTION

Remove power before removing or inserting this module. When you remove or insert a module with power applied, an electrical arc may occur. An electrical arc can cause personal injury or property damage by:

- sending an erroneous signal to your system's field devices, causing unintended machine motion
- causing an explosion in a hazardous environment
- Electrical arcing causes excessive wear to contacts on both the module and its mating connector and may lead to premature failure.

Reducing Noise

Most applications require installation in an industrial enclosure to reduce the effects of electrical interference. Analog inputs and outputs are highly susceptible to electrical noise. Electrical noise coupled to the analog inputs will reduce the performance (accuracy) of the module.

Group your modules to minimize adverse effects from radiated electrical noise and heat. Consider the following conditions when selecting a location for the analog module. Position the module:

- away from sources of electrical noise such as hard-contact switches, relays, and AC motor drives
- away from modules which generate significant radiated heat, such as the 1769-IA16. Refer to the module's heat dissipation specification.

In addition, route shielded, twisted-pair analog input and output wiring away from any high voltage I/O wiring.

Protecting the Circuit Board from Contamination

The printed circuit boards of the analog modules must be protected from dirt, oil, moisture, and other airborne contaminants. To protect these boards, the system must be installed in an enclosure suitable for the environment. The interior of the enclosure should be kept clean and the enclosure door should be kept closed whenever possible.

System Assembly

The module can be attached to the controller or an adjacent I/O module *before* or *after* mounting. For mounting instructions, see Panel Mounting Using the Dimensional Template on page 2-7, or DIN Rail Mounting on page 2-8. To

work with a system that is already mounted, see Replacing a Single Module within a System on page 2-9.

Figure 2.1 Assemble the Compact I/O System

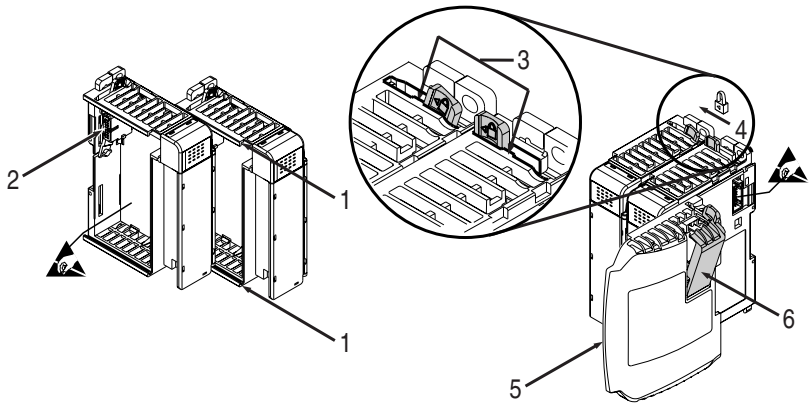

1. Disconnect power.
2. Check that the bus lever of the module to be installed is in the unlocked (fully right) position.
3. Use the upper and lower tongue-and-groove slots (1) to secure the modules together (or to a controller).
4. Move the module back along the tongue-and-groove slots until the bus connectors (2) line up with each other.
5. Push the bus lever back slightly to clear the positioning tab (3). Use your fingers or a small screwdriver.

6. To allow communication between the controller and module, move the bus lever fully to the left (4) until it clicks. Ensure it is locked firmly in place.

ATTENTION

When attaching I/O modules, it is very important that the bus connectors are securely locked together to ensure proper electrical connection.

7. Attach an end cap terminator (5) to the last module in the system by using the tongue-and-groove slots as before.

8. Lock the end cap bus terminator (6).

IMPORTANT

A 1769-ECR or 1769-ECL right or left end cap must be used to terminate the end of the bus.

Mounting

ATTENTION

During panel or DIN rail mounting of all devices, be sure that all debris (metal chips, wire strands, etc.) is kept from falling into the module. Debris that falls into the module could cause damage at power up.

Minimum Spacing

Maintain spacing from enclosure walls, wireways, adjacent equipment, etc. Allow 50 mm (2 in.) of space on all sides for adequate ventilation.

Figure 2.2 Space Requirements

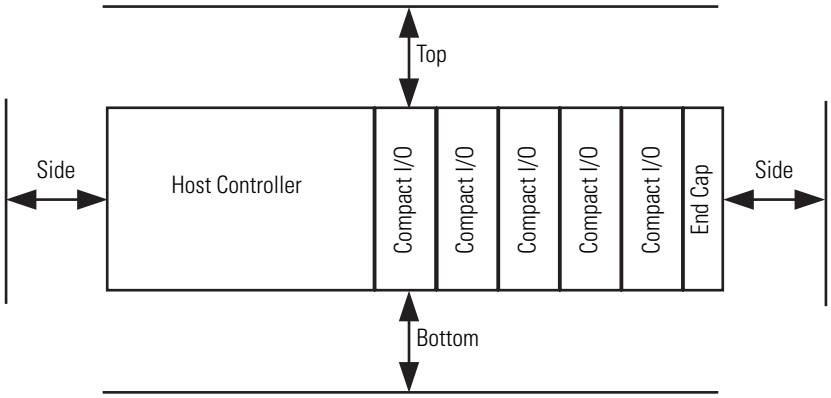

Panel Mounting

Mount the module to a panel using two screws per module. Use M4 or #8 panhead screws. Mounting screws are required on every module.

Figure 2.3 Panel Mounting Using the Dimensional Template

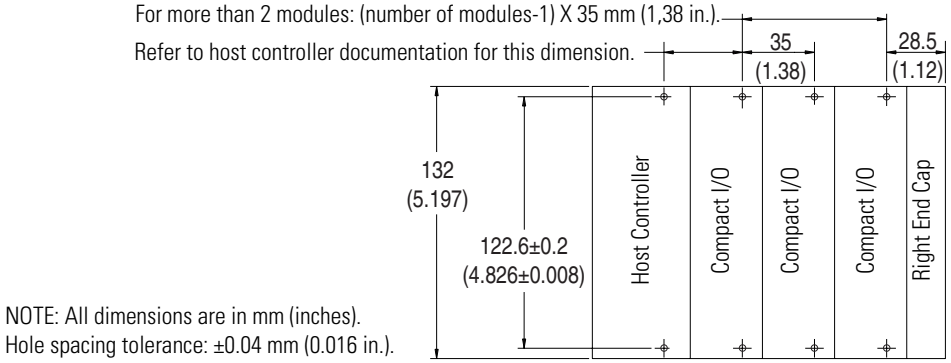

Figure 2.4 Panel Mounting for the 1769-IF8 Using the Dimensional Template

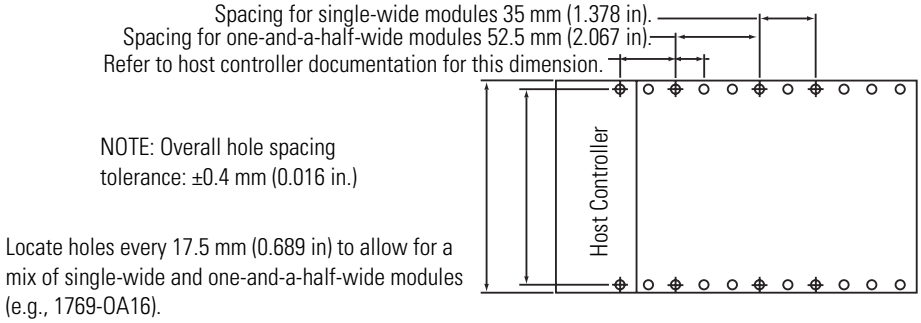

Panel Mounting Procedure Using Modules as a Template

The following procedure allows you to use the assembled modules as a template for drilling holes in the panel. If you have sophisticated panel mounting equipment, you can use the dimensional template provided on page 2-7. Due to module mounting hole tolerance, it is important to follow these procedures:

1. On a clean work surface, assemble no more than three modules.
2. Using the assembled modules as a template, carefully mark the center of all module-mounting holes on the panel.
3. Return the assembled modules to the clean work surface, including any previously mounted modules.
4. Drill and tap the mounting holes for the recommended M4 or #8 screw.
5. Place the modules back on the panel, and check for proper hole alignment.
6. Attach the modules to the panel using the mounting screws.

TIP If mounting more modules, mount only the last one of this group and put the others aside. This reduces remounting time during drilling and tapping of the next group.

7. Repeat steps 1 to 6 for any remaining modules.

DIN Rail Mounting

The module can be mounted using the following DIN rails:
35 x 7.5 mm (EN 50 022 - 35 x 7.5) or 35 x 15 mm (EN 50 022 - 35 x 15).

Before mounting the module on a DIN rail, close the DIN rail latches. Press the DIN rail mounting area of the module against the DIN rail. The latches will momentarily open and lock into place.

Replacing a Single Module within a System

The module can be replaced while the system is mounted to a panel (or DIN rail). Follow these steps in order:

1. Remove power. See important note on 2-4.
2. On the module to be removed, remove the upper and lower mounting screws from the module (or open the DIN latches using a flat-blade or phillips-style screwdriver).
3. Move the bus lever to the right to disconnect (unlock) the bus.
4. On the right-side adjacent module, move its bus lever to the right (unlock) to disconnect it from the module to be removed.
5. Gently slide the disconnected module forward. If you feel excessive resistance, check that the module has been disconnected from the bus, and that both mounting screws have been removed (or DIN latches opened).

TIP It may be necessary to rock the module slightly from front to back to remove it, or, in a panel-mounted system, to loosen the screws of adjacent modules.

6. Before installing the replacement module, be sure that the bus lever on the module to be installed and on the right-side adjacent module are in the unlocked (fully right) position.
7. Slide the replacement module into the open slot.
8. Connect the modules together by locking (fully left) the bus levers on the replacement module and the right-side adjacent module.
9. Replace the mounting screws (or snap the module onto the DIN rail).

External Power Switch

The analog modules have an external 24V dc power switch which gives you the option of using an external power supply. The switch is located in on the lower left portion of the module's circuit board, as shown below. With the switch pressed on the top (default), 24V dc power is drawn from the 1769 system power supply via the 1769 I/O bus. Pressed on the bottom, 24V dc power is drawn from the external power supply.

Wire the external power supply to the module via the module's terminal block. The external power supply must be Class 2 rated, with a 24V dc range of 20.4 to 26.4V dc and a minimum current rating that meets the needs of the modules used in your application. Refer to Maximum Current Draw on page 2-2.

IMPORTANT Only 1769-IF4 and -OF2 Series B modules have the 24V dc power switch.

Figure 2.5 External Power Switch

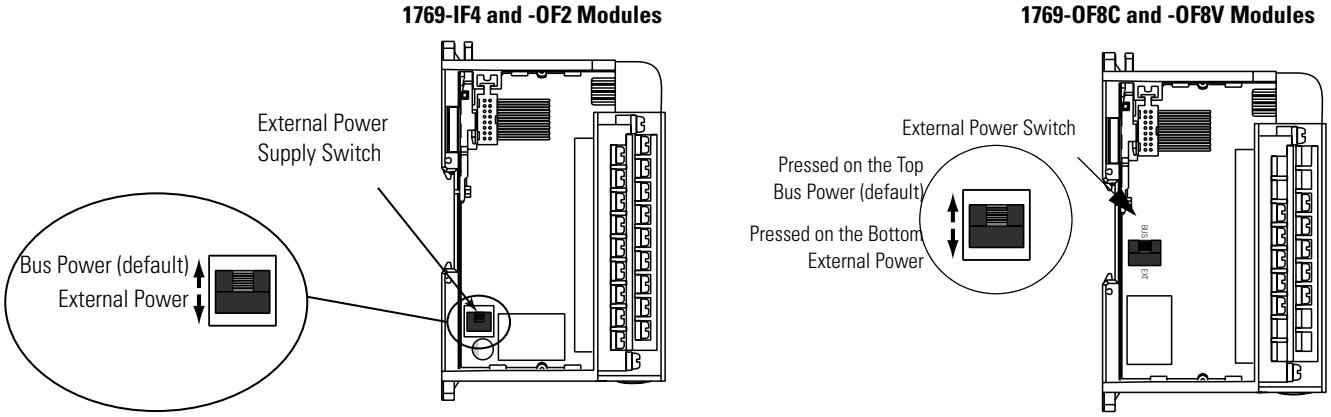

Field Wiring Connections

Grounding

This product is intended to be mounted to a well-grounded mounting surface such as a metal panel. Additional grounding connections from the module's mounting tabs or DIN rail (if used) are not required unless the mounting surface cannot be grounded. Refer to *Industrial Automation Wiring and Grounding Guidelines*, Allen-Bradley publication 1770-4.1, for additional information.

System Wiring Guidelines

Consider the following when wiring your system:

General

- All module commons (ANLG COM) are connected in the analog module. The analog common (ANLG COM) is not connected to earth ground inside the module.
- Channels are not isolated from each other.
- Do not use the analog module's NC terminals as connection points.
- To ensure optimum accuracy, limit overall cable impedance by keeping your cable as short as possible. Locate the I/O system as close to your sensors or actuators as your application will permit.
- Use Belden™ 8761, or equivalent, shielded wire.
- Keep shield connection to ground as short as possible.
- Under normal conditions, the drain wire and shield junction must be connected to earth ground via a panel or DIN rail mounting screw at the analog I/O module end.[1]

1769-IF4 and -IF8 Input Modules

- If multiple power supplies are used with analog inputs, the power supply commons must be connected together.
- The 1769-IF4 and -IF8 modules do not provide loop power for analog inputs. Use a power supply that matches the input transmitter specifications.
- Differential analog inputs are more immune to noise than single-ended analog inputs.
- Voltages on Vin+, V/Iin-, and Iin+ of the 1769-IF4 and -IF8 modules must be within ±10V dc of analog common.

1769-OF2, -OF8C, and -OF8V Output Modules

- Voltage outputs (Vout 0+ and Vout 1+ for 1769-OF2, Vout 0+ through Vout 7+ for 1769-OF8V) of the output modules are referenced to ANLG COM. Load resistance for a voltage output channel must be equal to or greater than 1K Ω
- Current outputs (Iout 0+ and Iout 1+ for 1769-OF2, Iout 0+ through Iout 7+ for 1769-OF8C) of the output modules source current that returns to ANLG COM. Load resistance for a current output channel must remain between 0 and 500 Ω

(1) In environments where high-frequency noise may be present, it may be necessary to directly ground cable shields to earth at the module end and via a 0.1μF capacitor at the sensor end.

Effect of Transducer/Sensor and Cable Length Impedance on Voltage Input Accuracy

For voltage inputs, the length of the cable used between the transducer/sensor and the 1769-IF4 or -IF8 module can affect the accuracy of the data provided by the module.

Figure 2.6 Voltage Input Accuracy

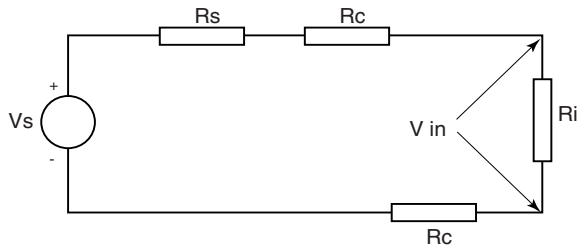

Where:

Rc = DC resistance of the cable (each conductor) depending on cable length

Rs = Source impedance of analog transducer/sensor input

Ri = Impedance of the voltage input (220 KΩ for 1769-IF4 and -IF8)

Vs = Voltage source (voltage at the transducer/sensor input device)

Vin = Measured potential at the module input

%Ai = Percent added inaccuracy in a voltage-based system due to source and cable impedance.

$$Vin = \frac{[Ri \times Vs]}{[Rs + (2 \times Rc) + Ri]}$$

For example, for Belden 8761 two conductor, shielded cable:

Rc = 16 Ω/1000 ft
Rs = 0 (ideal source)

$$\%Ai = \left(1 \angle \frac{Vin}{Vs}\right) \times 100$$

Table 2.2 Effect of Cable Length on Input Accuracy

Length of Cable (m)	dc resistance of the cable, Rc (Ω)	Accuracy impact at the input module
50	2.625	0.00238%
100	5.25	0.00477%
200	10.50	0.00954%
300	15.75	0.0143%

As input source impedance (Rs) and/or resistance (dc) of the cable (Rc) get larger, system accuracy decreases. If you determine that the inaccuracy error is significant, implementing the following equation in the control program can compensate for the added inaccuracy error due to the impedance of the source and cable.

$$Vs = Vin \times \frac{[Rs + (2 \times Rc) + Ri]}{Ri}$$

TIP In a current loop system, source and cable impedance do not impact system accuracy.

Effect of Device and Cable Output Impedance on Output Module Accuracy

The maximum value of the output impedance is shown in the example below, because it creates the largest deviation from an ideal voltage source.

Figure 2.7 Output Module Accuracy

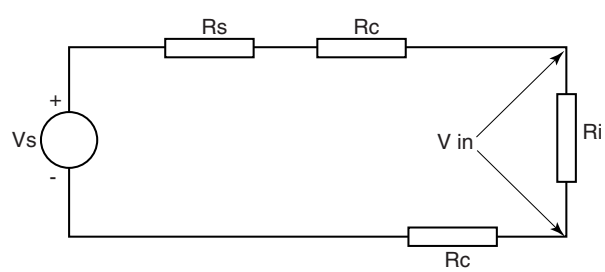

Where:

Rc = DC resistance of the cable (each conductor) depending on cable length

Rs = Source impedance (15 Ω for 1769-OF2 and 1 Ω for 1769-OF8V)

Ri = Impedance of the voltage input (220 KΩ for 1769-IF4)

Vs = Voltage at the output of 1769-OF2

Vin = Measured potential at the module input

%Ai = Percent added inaccuracy in a voltage-based system due to source and cable impedance.

$$Vin = \frac{[Ri \times Vs]}{[Rs + (2 \times Rc) + Ri]}$$

For example, for Belden 8761 two conductor, shielded cable and a 1769-IF4 input module:

Rc = 16 Ω/1000 ft
Rs = 15 Ω
Ri = 220 KΩ

$$\%Ai = \left(1 \angle \frac{Vin}{Vs}\right) \times 100$$

Table 2.3 Effect of Output Impedance and Cable Length on Accuracy

Length of Cable (m)	dc resistance of the cable Rc (Ω)	Accuracy impact at the input module
50	2.625	0.00919%
100	5.25	0.01157%
200	10.50	0.01634%
300	15.75	0.02111%

As output impedance (Rs) and/or resistance (dc) of the cable (Rc) get larger, system accuracy decreases. If you determine that the inaccuracy error is significant, implementing the following equation in the control program can compensate for the added inaccuracy error due to the impedance of the output module and cable.

$$Vs = Vin \times \frac{[Rs + (2 \times Rc) + Ri]}{Ri}$$

TIP In a current loop system, source and cable impedance do not impact system accuracy.

Labeling the Terminals

A removable, write-on label is provided with the module. Remove the label from the door, mark the identification of each terminal with permanent ink, and slide the label back into the door. Your markings (ID tag) will be visible when the module door is closed.

Figure 2.8 Terminal Labels

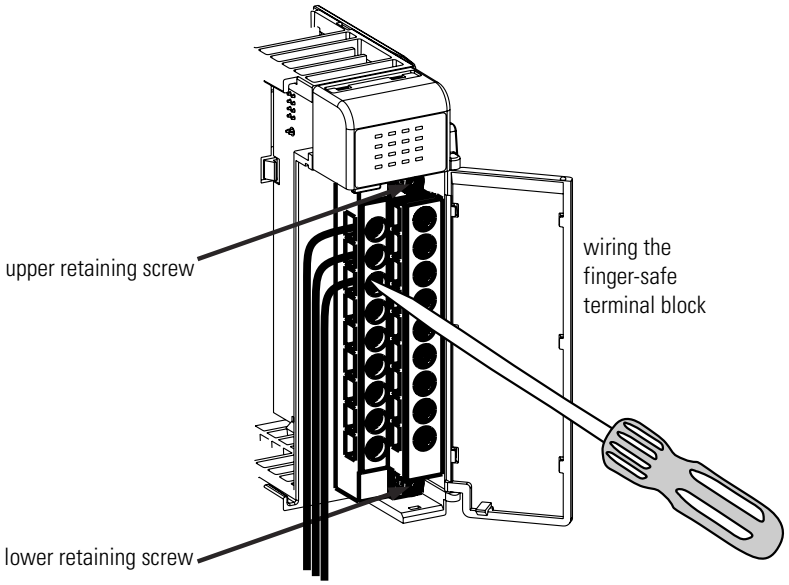

Removing the Finger-Safe Terminal Block

When wiring field devices to the module, it is not necessary to remove the terminal block. If you remove the terminal block, use the write-on label on the side of the terminal block to identify the module slot location and type. RTB position can be indicated by circling either the 'R' for right side or 'L' for left side.

Figure 2.9 Finger-Safe Terminal Block

To remove the terminal block, loosen the upper and lower retaining screws. The terminal block will back away from the module as you remove the screws. When replacing the terminal block, torque the retaining screws to 0.46 Nm (4.1 in-lbs).

Wiring the Finger-Safe Terminal Block

When wiring the terminal block, keep the finger-safe cover in place.

1. Loosen the terminal screws to be wired.
2. Begin wiring at the bottom of the terminal block and move up.
3. Route the wire under the terminal pressure plate. You can use the bare wire or a spade lug. The terminals accept a 6.35 mm (0.25 in.) spade lug.

TIP The terminal screws are non-captive. Therefore, it is possible to use a ring lug [maximum 1/4 inch o.d. with a 0.139 inch minimum i.d. (M3.5)] with the module.

4. Tighten the terminal screw making sure the pressure plate secures the wire. Recommended torque when tightening terminal screws is 0.68 Nm (6 in-lbs).

TIP If you need to remove the finger-safe cover, insert a screwdriver into one of the square, wiring holes and gently pry the cover off. If you wire the terminal block with the finger-safe cover removed, you will not be able to put it back on the terminal block because the wires will be in the way.

Wire Size and Terminal Screw Torque

Each terminal accepts up to two wires.

Table 2.4 Terminal Wire Considerations

Wire Type		Wire Size	Terminal Screw Torque	Retaining Screw Torque
Solid	Cu-90°C (194°F)	#14 to #22 AWG	0.68 Nm (6 in-lbs)	0.46 Nm (4.1 in-lbs)
Stranded	Cu-90°C (194°F)	#16 to #22 AWG	0.68 Nm (6 in-lbs)	0.46 Nm (4.1 in-lbs)

Wiring the Modules

ATTENTION

To prevent shock hazard, care should be taken when wiring the module to analog signal sources. Before wiring any analog module, disconnect power from the system power supply and from any other source to the analog module.

After the analog module is properly installed, follow the wiring procedure below. To ensure proper operation and high immunity to electrical noise, always use Belden™ 8761 (shielded, twisted-pair) or equivalent wire.

ATTENTION

When wiring an analog input, take care to avoid connecting a voltage source to a channel configured for current input. Improper module operation or damage to the voltage source can occur.

Never connect a voltage or current source to an analog output channel.

Figure 2.10 Belden 8761 Wire

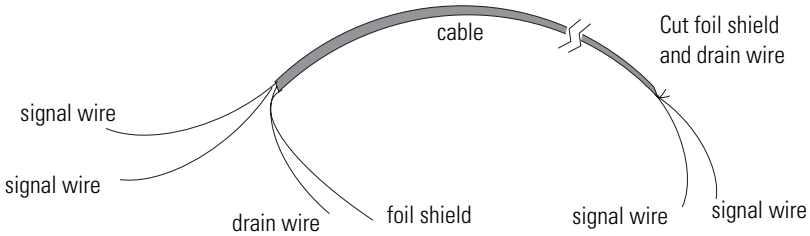

To wire your module follow these steps.

1. At each end of the cable, strip some casing to expose the individual wires.

2. Trim the signal wires to 2-inch lengths. Strip about 3/16 inch (5 mm) of insulation away to expose the end of the wire.

ATTENTION

Be careful when stripping wires. Wire fragments that fall into a module could cause damage at power up.

3. At one end of the cable, twist the drain wire and foil shield together.

   Under normal conditions, this drain wire and shield junction must be connected to earth ground, via a panel or DIN rail mounting screw at the analog I/O module end. Keep the length of the drain wire as short as possible.

   In environments where high frequency noise may be present, it may be necessary to ground the cable shields to earth at the module end via a 0.1 µF capacitor at the sensor end for analog inputs and at the load end for analog outputs.

4. At the other end of the cable, cut the drain wire and foil shield back to the cable.

5. Connect the signal wires to the terminal block as shown in Analog Input Modules Wiring on page 2-19 and Analog Output Modules Wiring on page 2-24. Connect the other end of the cable to the analog input or output device.

6. Repeat steps 1 through 5 for each channel on the module.

Terminal Door Label

A removable, write-on label is provided with the module. Remove the label from the door, mark the identification of each terminal with permanent ink, and slide the label back into the door. Your markings (ID tag) will be visible when the module door is closed.

Analog Input Modules Wiring

Figure 2.11 1769-IF4 Terminal Layout

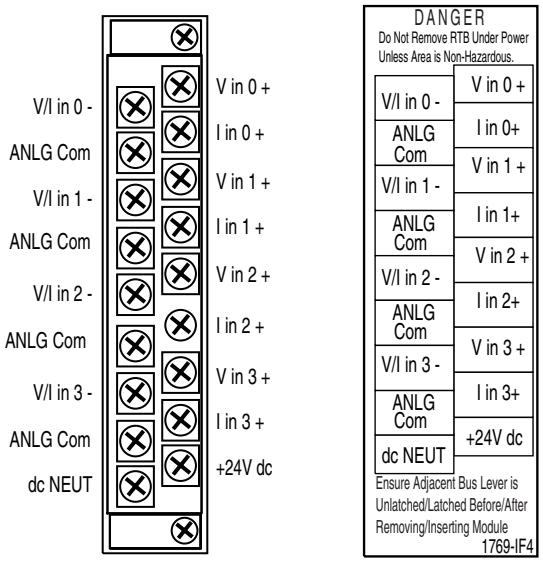

Figure 2.12 1769-IF4 Wiring Diagram Showing Differential Inputs

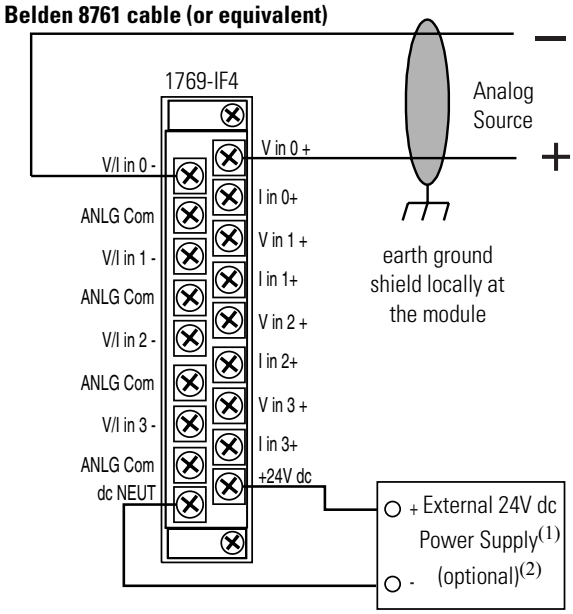

(1) The external power supply must be rated Class 2, with a 24V dc range of 20.4 to 26.4V dc and 60 mA minimum for a single input module.

(2) Series B and later modules provide this option.

Figure 2.13 1769-IF4 Wiring Single-ended Sensor/Transmitter Types

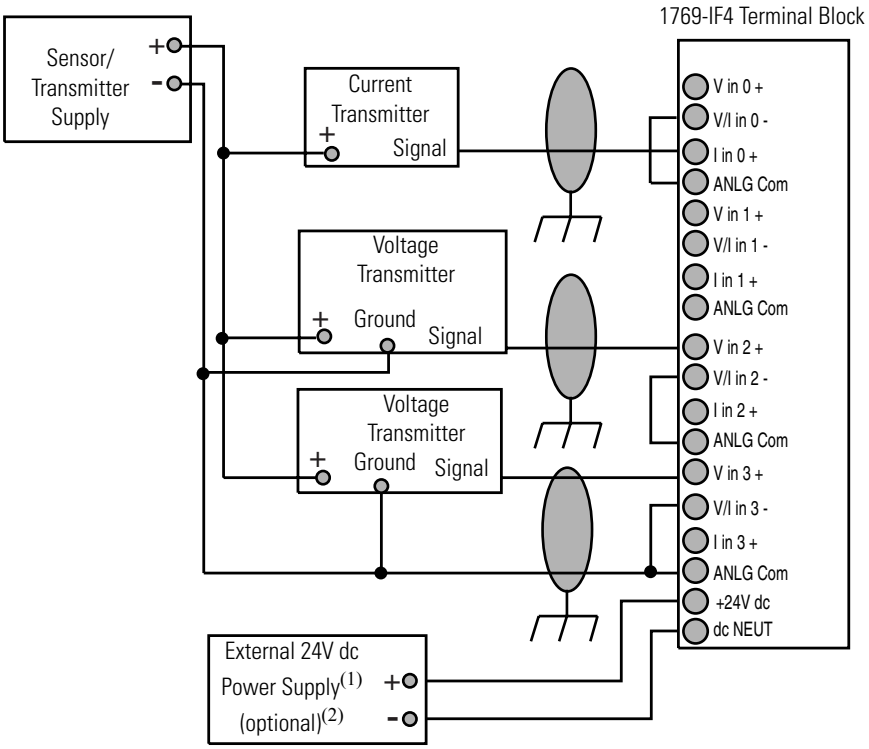

(1) The external power supply must be rated Class 2, with a 24V dc range of 20.4 to 26.4V dc and 60 mA minimum for a single input module.

(2) Series B and later modules provide this option.

Figure 2.14 1769-IF4 Wiring Mixed Transmitter Types

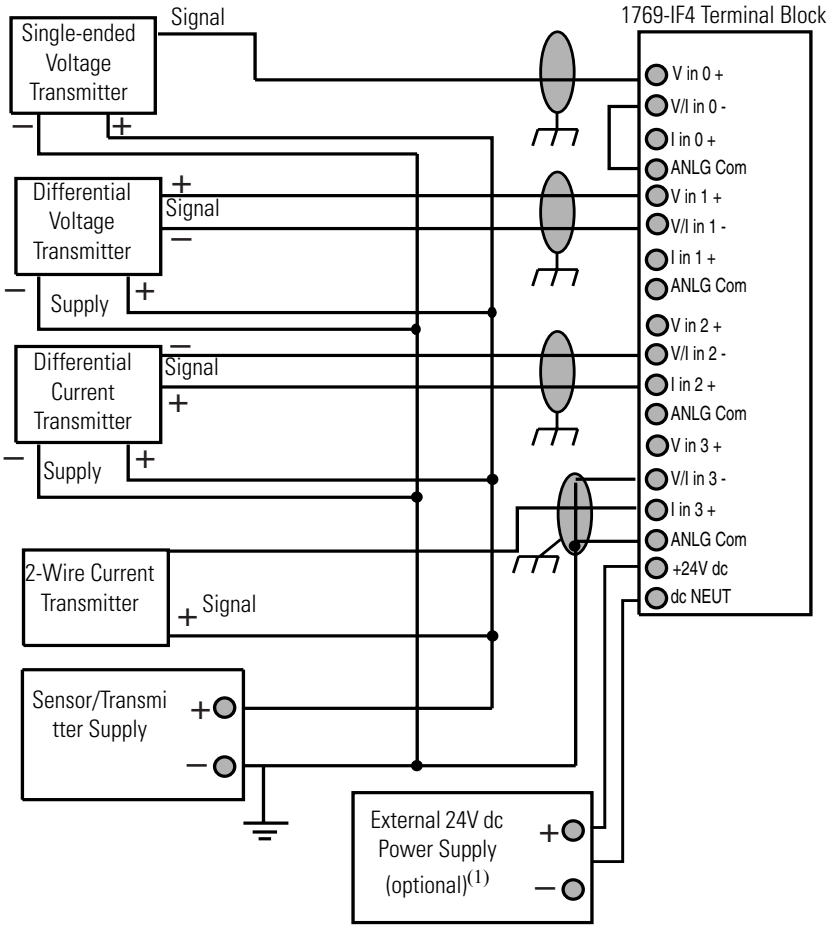

(1) The external power supply must be rated Class 2, with a 24V dc range of 20.4 to 26.4V dc and 60 mA minimum for a single input module.

(2) Series B and later modules provide this option.

Figure 2.15 1769-IF8 Terminal Layout

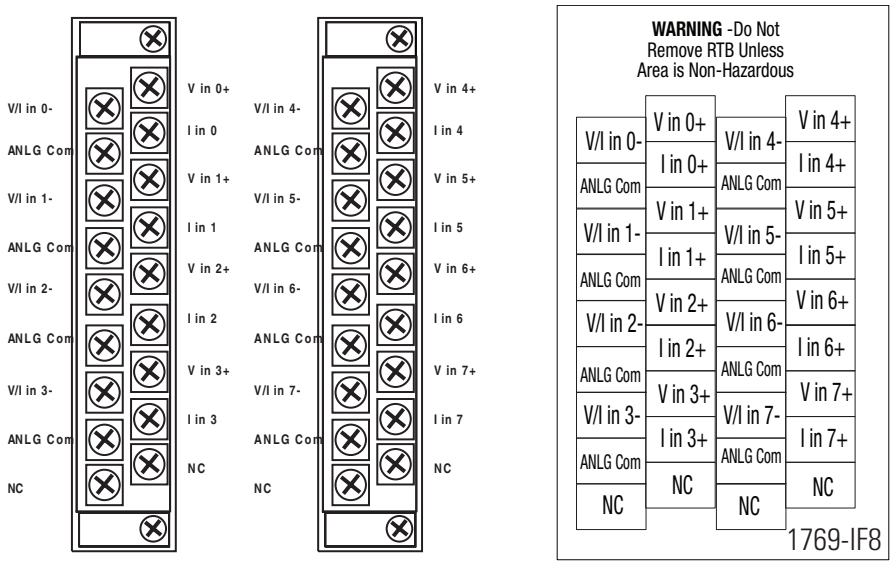

Figure 2.16 1769-IF8 Wiring Differential Inputs

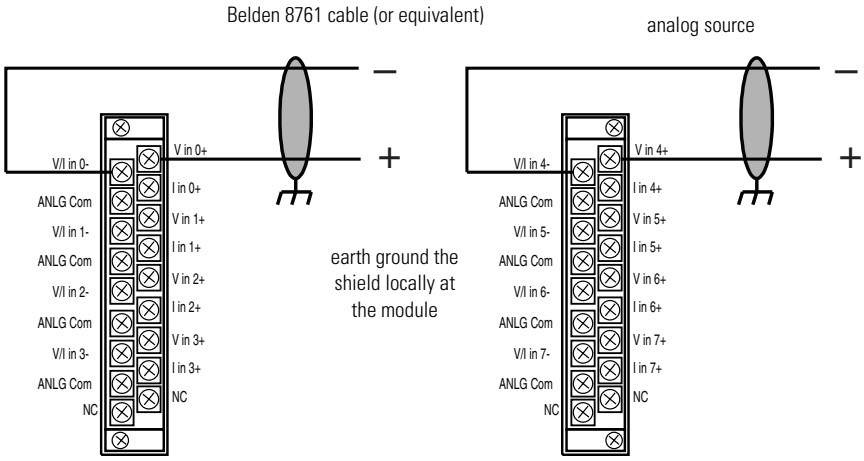

Figure 2.17 1769-IF8 Wiring Single-Ended Sensor/Transmitter Types

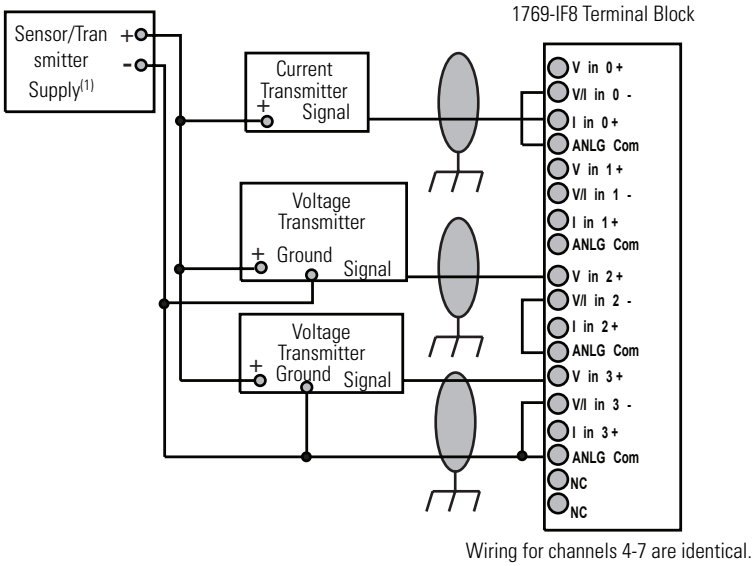

(1) The external power supply must be rated Class 2, with a 24V dc range of 20.4 to 26.4V dc and 60 mA minimum for a single input module.

Figure 2.18 1769-IF8 Wiring Mixed Transmitter Types

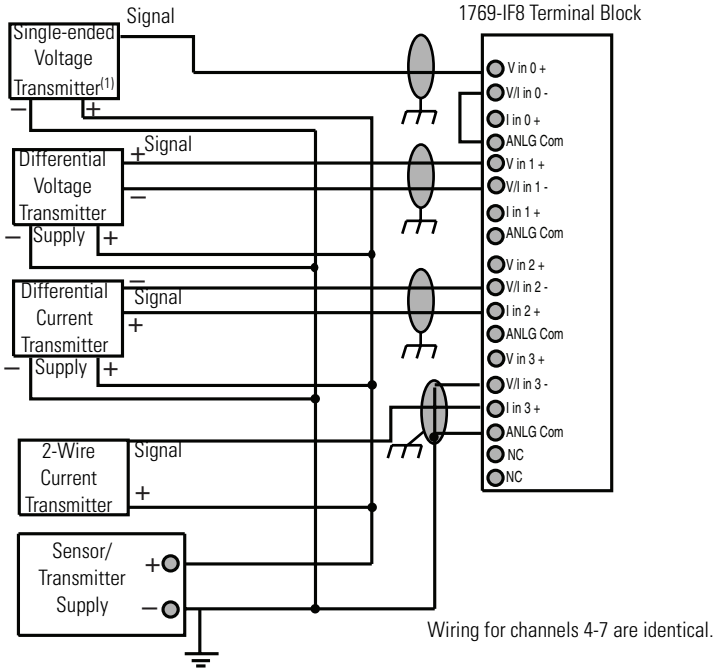

(1) The external power supply must be rated Class 2, with a 24V dc range of 20.4 to 26.4V dc and 60 mA minimum for a single input module.

Analog Output Modules Wiring

Figure 2.19 1769-OF2 Terminal Layout

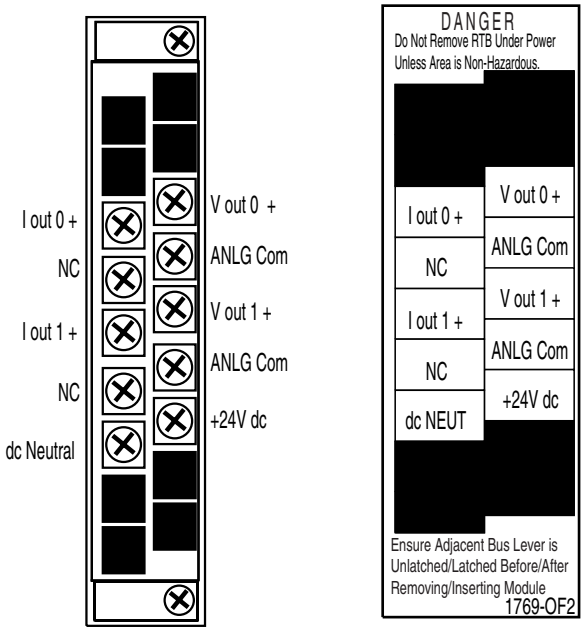

Figure 2.20 1769-OF2 Wiring Diagram

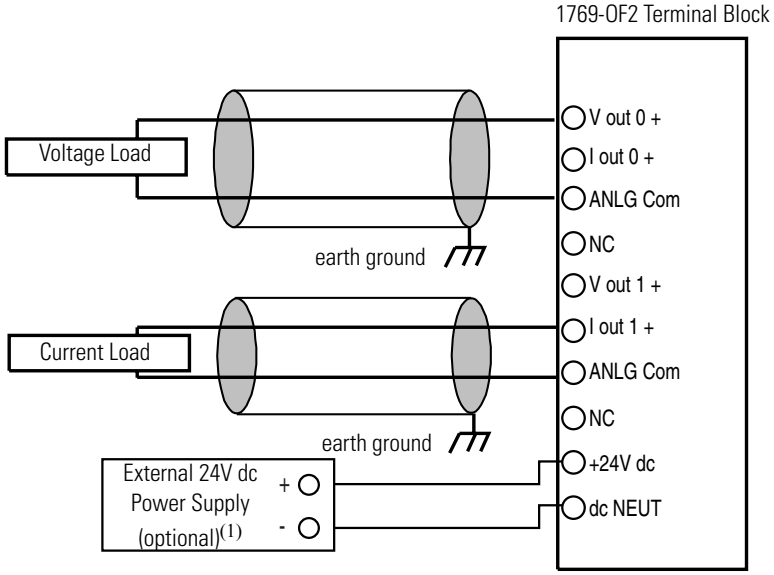

(1) The external power supply must be rated Class 2, with a 24V dc range of 20.4 to 26.4V dc and 120 mA minimum per output module.

Figure 2.21 1769-OF8C Terminal Layout

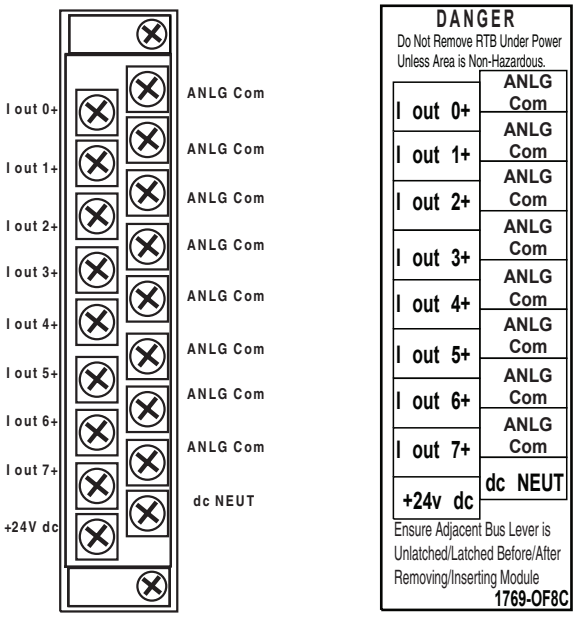

Figure 2.22 1769-OF8C Wiring Diagram

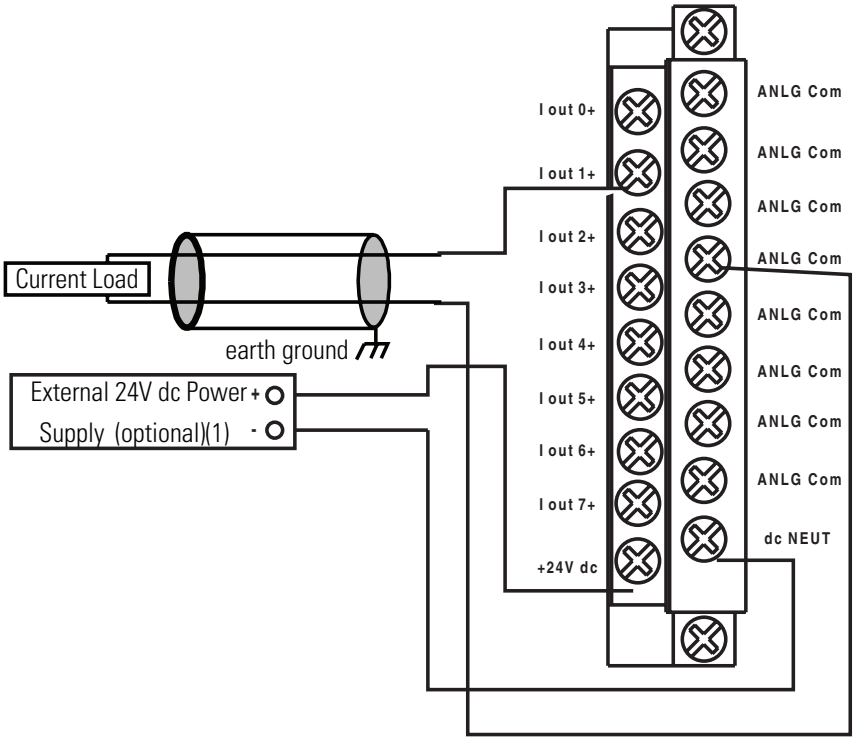

(1) The external power supply must be rated Class 2, with a 24V dc range of 20.4 to 26.4V dc and 120 mA minimum per output module.

Figure 2.23 1769-OF8V Terminal Layout

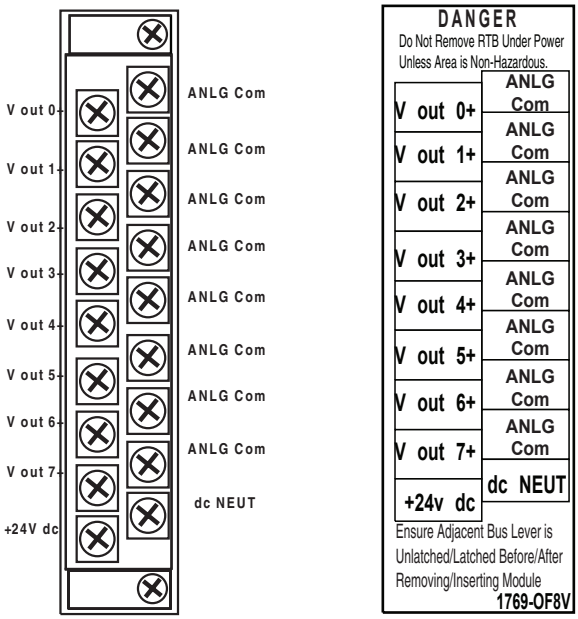

Figure 2.24 1769-OF8V Wiring Diagram

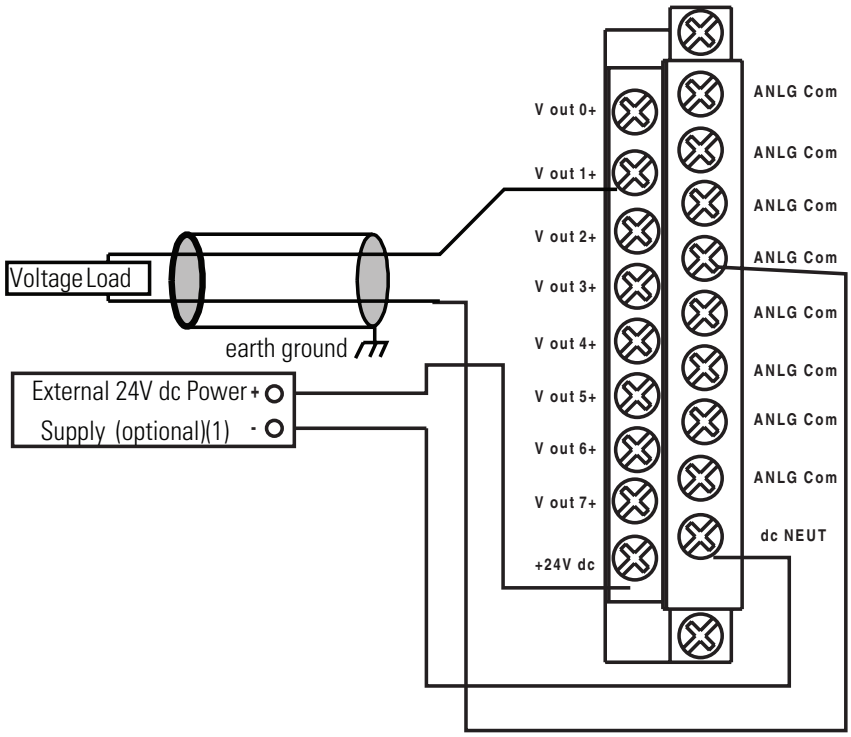

(1) The external power supply must be rated Class 2, with a 24V dc range of 20.4 to 26.4V dc and 120 mA minimum per output module.

Module Data, Status, and Channel Configuration for the Input Modules

This chapter examines the analog input modules' data table, channel status, and channel configuration word. The 1769-IF4 module information follows. For 1769-IF8 module information, see page 3-16.

1769-IF4 Input Module Addressing

The 1769-IF4 memory map shows the input and configuration image tables for the 1769-IF4. Detailed information on the input image table can be found in 1769-IF4 Input Data File on page 3-2.

Figure 3.1 1769-IF4 Memory Map

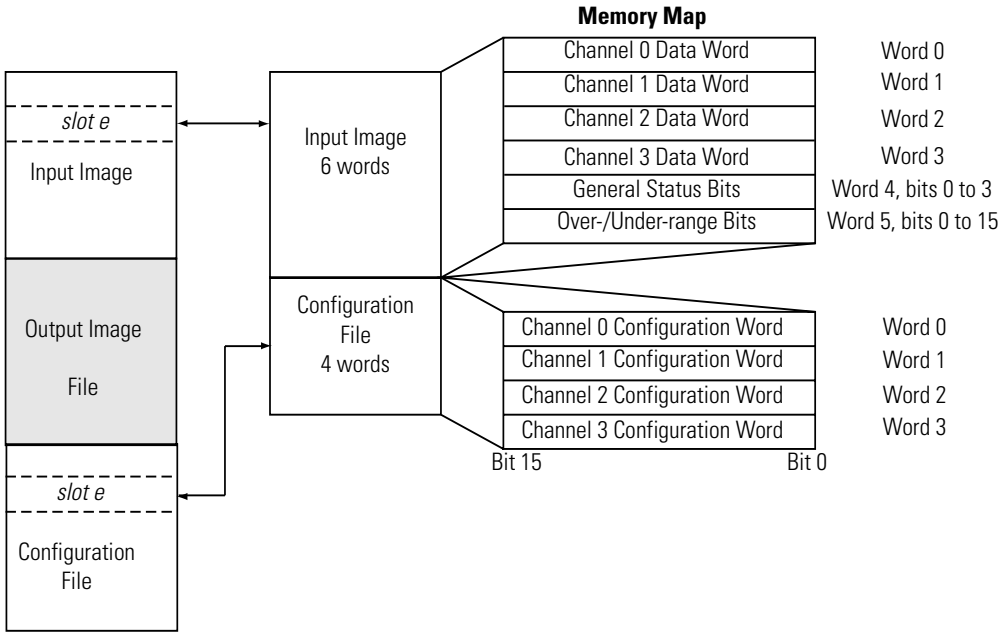

1769-IF4 Input Image

The 1769-IF4 input image file represents data words and status bits. Input words 0 through 3 hold the input data that represents the value of the analog inputs for channels 0 through 3. These data words are valid only when the channel is enabled and there are no errors. Input words 4 and 5 hold the status bits. To receive valid status information, the channel must be enabled.

TIP You can access information in the input image file using the programming software configuration screen.

1769-IF4 Configuration File

The configuration file contains information that you use to define the way a specific channel functions. The configuration file is explained in more detail in 1769-IF4 Configuration Data File on page 3-4.

TIP Not all controllers support program access to the configuration file. Refer to your controller's user manual.

1769-IF4 Input Data File

The input data table lets you access analog input module read data for use in the control program, via word and bit access. The data table structure is shown in table below.

Table 3.1 1769-IF4 Input Data Table

Word/Bit	15	14	13	12	11	10	9	8	7	6	5	4	3	2	1	0
Word 0	SGN	Analog Input Data Value Channel 0														
Word 1	SGN	Analog Input Data Value Channel 1														
Word 2	SGN	Analog Input Data Value Channel 2														
Word 3	SGN	Analog Input Data Value Channel 3														
Word 4	Not Used (Bits set to 0)												S3	S2	S1	S0
Word 5	U0	O0	U1	O1	U2	O2	U3	O3	Set to zero							

1769-IF4 Input Data Values

Words 0 through 3 contain the converted analog input data from the field device. The most significant bit (MSB) is the sign bit.

General Status Bits (S0 through S3)

Word 4, bits 0 through 3 contain the general operational status bits for input channels 0 through 3. If set (1), these bits indicate an error associated with that channel. The over- and under-range bits for channels 0 through 3 are logically ORed to the appropriate general status bit.

Over-Range Flag Bits (O0 through O3)

Over-range bits for channels 3 through 0 are contained in word 5, bits 8, 10, 12, and 14. They apply to all input types. When set (1), this bit indicates input signals beyond the normal operating range. However, the module continues to convert analog data to the maximum full range value. The bit is automatically reset (0) by the module when the over-range condition is cleared and the data value is within the normal operating range.

Under-Range Flag Bits (U0 through U3)

Under-range bits for channels 3 through 0 are contained in word 5, bits 9, 11, 13, and 15. They apply to all input types. When set (1), this bit indicates input signals below the normal operating range. It may also indicate an open circuit condition, when the module is configured for the 4 to 20 mA range. However, the module continues to convert analog data to the minimum full range value. The bit is automatically reset (0) by the module when the under-range condition is cleared and the data value is within the normal operating range.

1769-IF4 Configuration Data File

The configuration file lets you determine how each individual input channel will operate. Parameters such as the input type and data format are set up using this file. This data file is writable and readable. The default value of the configuration data table is all zeros. The structure of the channel configuration file is shown below.

Table 3.2 1769-IF4 Configuration Data Table[1]

Word/Bit	15	14	13	12	11	10	9	8	7	6	5	4	3	2	1	0
Word 0	Enable Channel 0	Input Data Format Select Channel 0			Input Type/Range Select Channel 0				Reserved				Input Filter Select Channel 0			
Word 1	Enable Channel 1	Input Data Format Select Channel 1			Input Type/Range Select Channel 1				Reserved				Input Filter Select Channel 1			
Word 2	Enable Channel 2	Input Data Format Select Channel 2			Input Type/Range Select Channel 2				Reserved				Input Filter Select Channel 2			
Word 3	Enable Channel 3	Input Data Format Select Channel 3			Input Type/Range Select Channel 3				Reserved				Input Filter Select Channel 3			

(1) The ability to change these values using your control program is not supported by all controllers. Refer to your controller manual for details.

The configuration file is typically modified using the programming software configuration screen. For information on configuring the module using MicroLogix 1500 and RSLogix 500, see Appendix B; for CompactLogix and RSLogix 5000, see Appendix C; for 1769-ADN DeviceNet Adapter and RSNetWorx, see Appendix D.

The configuration file can also be modified through the control program, if supported by the controller. The structure and bit settings are shown in Channel Configuration on page 3-5.

Channel Configuration

Each channel configuration word consists of bit fields, the settings of which determine how the channel operates. See the table below and the descriptions that follow for valid configuration settings and their meanings. The default bit status of the configuration file is all zeros.

Table 3.3 Bit Definitions for Channel Configuration Words 0 through 3

Bit(s)	Define	These bit settings																Indicate this
		15	14	13	12	11	10	9	8	7	6	5	4	3	2	1	0	
0 to 3	Input Filter Select									Not Used				0	0	0	0	60 Hz
														0	0	0	1	50 Hz
														0	0	1	0	Not Used
														0	0	1	1	250 Hz
														0	1	0	0	500 Hz
																		Not Used(1)
4 to 7	Reserved																	Reserved(2)
8 to 11	Input Type/Range Select					0	0	0	0									-10 to +10V dc
						0	0	0	1									0 to 5V dc
						0	0	1	0									0 to 10V dc
						0	0	1	1									4 to 20 mA
						0	1	0	0									1 to 5V dc
						0	1	0	1									0 to 20 mA
																		Not Used[1]
12 to 14	Input Data Format Select		0	0	0													Raw/Proportional Data
			0	0	1													Engineering Units
			0	1	0													Scaled for PID(3)
			0	1	1													Percent Range
																		Not Used[1]
15	Enable Channel	1																Enabled
		0																Disabled

(1) Any attempt to write a non-valid (not used) bit configuration into any selection field results in a module configuration error. See Configuration Errors on page 5-6.

(2) If reserved bits are not equal to zero, a configuration error occurs.

(3) This range is applicable to the PID function of the MicroLogix 1500 packaged controller, PLC, or SLC controllers. Logix controllers can use this or one of the other ranges for their PID functions.

Enable/Disable Channel

This configuration selection lets each channel to be individually enabled.

TIP When a channel is not enabled (0), no voltage or current input is provided to the controller by the A/D converter.

Input Filter Selection

The input filter selection field lets you select the filter frequency for each channel and provides system status of the input filter setting for analog input channels 0 through 3. The filter frequency affects the noise rejection characteristics, as explained below. Select a filter frequency considering acceptable noise and step response time.

Noise Rejection

The 1769-IF4 uses a digital filter that provides noise rejection for the input signals. The filter is programmable, allowing you to select from four filter frequencies for each channel. The digital filter provides the highest noise rejection at the selected filter frequency. A lower frequency (60 Hz versus 250 Hz) can provide better noise rejection but it increases channel update time. Transducer power supply noise, transducer circuit noise, or process variable irregularities may also be sources of normal mode noise.

Common Mode Rejection is better than 60 dB at 50 and 60 Hz, with the 50 and 60 Hz filters selected, respectively. The module performs well in the presence of common mode noise as long as the signals applied to the user plus and minus input terminals do not exceed the common mode voltage rating (± 10 V) of the module. Improper earth ground may be a source of common mode noise.

Channel Step Response

The selected channel filter frequency determines the channel's step response. The step response is the time required for the analog input signal to reach 100% of its expected final value. This means that if an input signal changes faster than the channel step response, a portion of that signal will be attenuated by the channel filter.

Table 3.4 Filter Frequency and Step Response

Filter Frequency	Cut-off Frequency	Step Response
50 Hz	13.1 Hz	60 ms
60 Hz	15.7 Hz	50 ms
250 Hz	65.5 Hz	12 ms
500 Hz	131 Hz	6 ms

Channel Cut-Off Frequency

The -3 dB frequency is the filter cut-off frequency. The cut-off frequency is defined as the point on the frequency response curve where frequency components of the input signal are passed with 3 dB of attenuation. All input frequency components at or below the cut-off frequency are passed by the digital filter with less than 3 dB of attenuation. All frequency components above the cut-off frequency are increasingly attenuated as shown in the graphs below.

The cut-off frequency for each channel is defined by its filter frequency selection. Choose a filter frequency so that your fastest changing signal is below that of the filter's cut-off frequency. The cut-off frequency should not be confused with the update time. The cut-off frequency relates to how the digital filter attenuates frequency components of the input signal. The update time defines the rate at which an input channel is scanned and its channel data word is updated.

Figure 3.2 Frequency Response Graphs

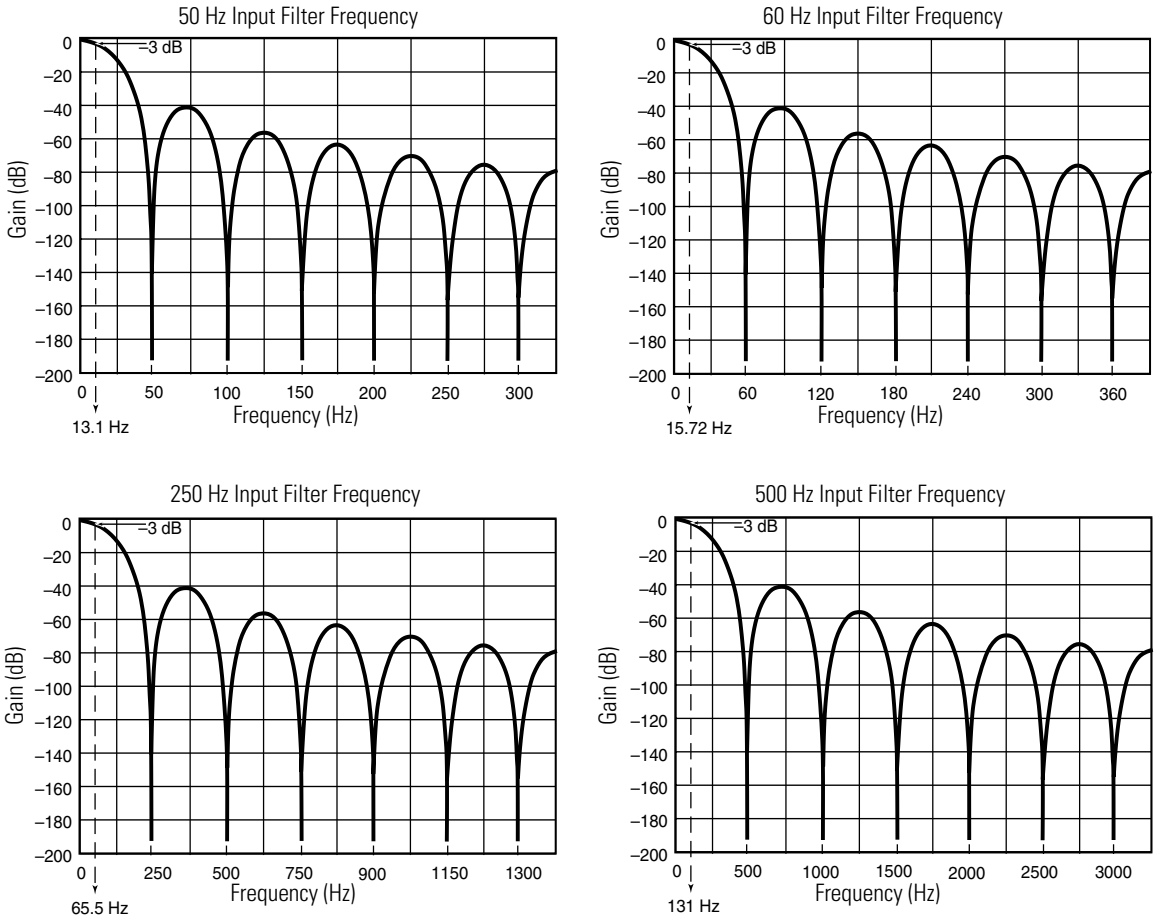

Module Update Time and Scanning Process

The module update time is defined as the time required for the module to sample and convert the input signals of all enabled input channels and provide the resulting data values to the processor. Module update time can be calculated by adding the sum of all enabled channel times. Channel times include channel scan time, channel switching time, and reconfiguration time. The module sequentially samples the channels in a continuous loop.

Figure 3.3 Sequential Sampling

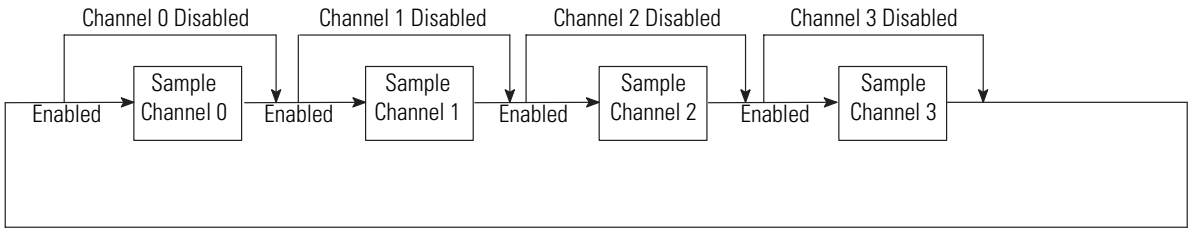

Table 3.5 shows the channel update times. The fastest module update time occurs when only one channel is enabled with a 500 Hz filter (4 ms). If more than one channel is enabled, the update time is faster if both channels have the same configuration. See the first example on page 3-9. The slowest module update time occurs when all four channels are enabled with different configurations. See the second example on page 3-9.

Table 3.5 Channel Update Time

Filter Frequency	Channel Update Time
50 Hz	22 ms
60 Hz	19 ms
250 Hz	6 ms
500 Hz	4 ms

Channel Switching and Reconfiguration Times

The table below provides the channel switching and reconfiguration times for a channel.

Table 3.6 Channel Switching and Reconfiguration Times

	Description	Duration			
		50 Hz	60 Hz	250 Hz	500 Hz
Channel Switching Time	The time it takes the module to switch from one channel to another.	46 ms	39 ms	14 ms	10 ms
Channel-to-Channel Reconfiguration Time	The time it takes the module to change its configuration settings for a difference in configuration between one channel and another.	116 ms	96 ms	20 ms	8 ms

Examples of Calculating Module Update Time

EXAMPLE

1. Two Channels Enabled with Identical Configurations

The following example calculates the 1769-IF4 module update time for two channels enabled with the same configuration and a 500 Hz filter.

Module Update Time = [Ch 0 Update Time + Ch 0 Switching Time] + [Ch 1 Update Time + Ch 1 Switching Time]

28 = [4 ms + 10 ms] + [4 ms + 10 ms]

EXAMPLE

2. Three Channels Enabled with Different Configurations

The following example calculates the module update time for three channels with the following configurations:

- Channel 0: ±10V dc with 60 Hz filter
- Channel 1: ±10V dc with 500 Hz filter
- Channel 2: 4 to 20 mA with 250 Hz filter

Module Update Time =[Ch 0 Reconfiguration Time + Ch 0 Update Time + Ch 0 Switching Time]

+

[Ch 1 Reconfiguration Time + Ch 1 Update Time + Ch 1 Switching Time]

+

[Ch 2 Reconfiguration Time + Ch 2 Scan Time + Ch 2 Switching Time]

216 = [96 ms + 19 ms + 39 ms] + [8 ms + 4 ms + 10 ms] + [20 ms + 6 ms + 14 ms]

Input Type/Range Selection

This selection along with proper input wiring lets you configure each channel individually for current or voltage ranges and provides the ability to read the current range selections.

Input Data Selection Formats

This selection configures channels 0 through 3 to present analog data in any of the following formats:

- Raw/Proportional Data
- Engineering Units
- Scaled-for-PID
- Percent Range

Raw/Proportional Data

The value presented to the controller is proportional to the selected input and scaled into the maximum data range allowed by the bit resolution of the A/D converter and filter selected. The full range for a ±10Vdc user input is -32767 to +32767. See Table 3.7 Valid Input Data on page 3-11.

Engineering Units

The module scales the analog input data to the actual current or voltage values for the selected input range. The resolution of the engineering units is dependent on the range selected and the filter selected. See Table 3.7 Valid Input Data on page 3-11.

Scaled-for-PID

The value presented to the controller is a signed integer with zero representing the lower user range and 16383 representing the upper user range. Allen-Bradley controllers, such as the MicroLogix 1500, use this range in their PID equations. The amount over and under user range (full scale range -410 to 16793) is also included. See Table 3.7 Valid Input Data on page 3-11.

Percent Range

The input data is presented as a percentage of the user range. For example, 0V to 10V dc equals 0% to 100%. See Table 3.7 on page 3-11.

TIP The ±10V dc range does not support the percent user range data format.

Valid Input Data Word Formats/Ranges

The following table shows the valid formats and min./max. data ranges provided by the module.

Table 3.7 Valid Input Data

1769-IF4 Input Range	Input Value	Example Data	Input Range Condition	Raw/Proportional Data	Engineering Unit	Scaled-for-PID	Percent Full Range
				Decimal Range	Decimal Range	Decimal Range	Decimal Range
-10V to +10V dc	Over 10.5V dc	+11.0V dc	Over-range	32767 (max.)	10500 (max.)	16793 (max.)	N/A
	+10.5V dc	+ 10.5V dc	Over-range	32767 (max.)	10500 (max.)	16793 (max.)	N/A
	-10V to +10V dc	+10.0V dc	Normal	31206	10000	16383	N/A
		0.0V dc	Normal	0	0	8192	N/A
		-10.0V dc	Normal	-31206	-10000	0	N/A
	-10.5Vdc	-10.5V dc	Under-range	-32767 (min.)	-10500 (min.)	-410 (min.)	N/A
	Under -10.5V dc	-11.0V dc	Under-range	-32767 (min.)	-10500 (min.)	-410 (min.)	N/A
0V to 5V dc	Over 5.25V dc	5.5V dc	Over-range	32767 (max.)	5250 (max.)	17202 (max.)	10500 (max.)
	5.25V dc	5.25V dc	Over-range	32767 (max.)	5250 (max.)	17202 (max.)	10500 (max.)
	0.0V dc to 5.0V dc	5.0V dc	Normal	31206	5000	16383	10000
		0.0V dc	Normal	0	0	0	0
	-0.5V dc	-0.5V dc	Under-range	-3121 (min.)	-500 (min.)	-1638 (min.)	-1000 (min.)
	Under -0.5V dc	-1.0V dc	Under-range	-3121 (min.)	-500 (min.)	-1638 (min.)	-1000 (min.)
0V to 10V dc	Over 10.5V dc	11.0V dc	Over-range	32767 (max.)	10500 (max.)	17202 (max.)	10500 (max.)
	+10.5V dc	10.5V dc	Over-range	32767 (max.)	10500 (max.)	17202 (max.)	10500 (max.)
	0.0V dc to 10.0V dc	10.0V dc	Normal	31206	10000	16383	10000
		0.0V dc	Normal	0	0	0	0
	-0.5V dc	-0.5V dc	Under-range	-1560 (min.)	-500 (min.)	-819 (min.)	-500 (min.)
	Under -5.0V dc	-1.0V dc	Under-range	-1560 (min.)	-500 (min.)	-819 (min.)	-500 (min.)
4 mA to 20 mA	Over 21.0 mA	22.0 mA	Over-range	32767 (max.)	21000 (max.)	17407 (max.)	10625 (max.)
	21.0 mA	21.0 mA	Over-range	32767 (max.)	21000 (max.)	17407 (max.)	10625 (max.)
	4.0 mA to 20.0 mA	20.0 mA	Normal	31206	20000	16383	10000
		4.0 mA	Normal	6241	4000	0	0
	3.2 mA	3.2 mA	Under-range	4993 (min.)	3200 (min.)	-819 (min.)	-500 (min.)
	Under 3.2 mA	0.0 mA	Under-range	4993 (min.)	3200 (min.)	-819 (min.)	-500 (min.)

Table 3.7 Valid Input Data

1769-IF4 Input Range	Input Value	Example Data	Input Range Condition	Raw/Proportional Data	Engineering Unit	Scaled-for-PID	Percent Full Range
				Decimal Range	Decimal Range	Decimal Range	Decimal Range
1.0V to 5V dc	Over 5.25V dc	5.5V dc	Over-range	32767 (max.)	5250	17407	10625
	+5.25V dc	5.25V dc	Over-range	32767 (max.)	5250	17407	10625
	1.0V to 5.0V dc	5.0V dc	Normal	31206	5000	16383	10000
		1.0V dc	Normal	6243	1000	1	1
	0.5V dc	0.5V dc	Under-range	3121 (min.)	500	-2048	-1250
	Under 0.5V dc	0.0V dc	Under-range	3121 (min.)	500	-2048	-1250
0 mA to 20 mA	Over 21.0 mA	22.0 mA	Over-range	32767	21000	17202	10500
	21.0 mA	21.0 mA	Over-range	32767	21000	17202	10500
	0.0 mA to 20.0 mA	20.0 mA	Normal	31206	20000	16383	10000
		0.0 mA	Normal	0	0	0	0
	Under 0.0 mA	0.0 mA	Under-range	0	0	0	0

Effective Resolution

The effective resolution for an input channel depends upon the filter frequency selected for that channel. The following tables provide the effective resolution for the four frequencies for each of the range selections.

Table 3.8 50Hz / 60Hz Effective Resolution

1769-IF4 Input Range	Raw/Proportional Data Over the Full Input Range		Engineering Units Over the Full Input Range		Scaled-For-PID Over the Full Input Range		Percent Over the Full Input Range	
	Bits and Engineering Units Resolution	Decimal Range and Count Value	Resolution	Decimal Range and Count Value	Resolution	Decimal Range and Count Value	Resolution	Decimal Range and Count Value
-10 to +10V dc	Sign +14 0.64 mV/ 2 counts	±32767 Count by 2	1.00 mV/ 1 count	±10500 Count by 1	1.22 mV/ 1 count	-410 to +16793 Count by 1	Not Applicable	Not Applicable
0 to +5V dc	Sign +13 0.64 mV/ 4 counts	-3121 to +32767 Count by 4	1.00 mV/ 1 count	-500 to +5250 Count by 1	0.92 mV/ 3 counts	-1638 to +17202 Count by 3	1.00 mV/ 2 counts	-1000 to +10500 Count by 2
0 to +10V dc	Sign +14 0.64 mV/ 2 counts	-1560 to +32767 Count by 2	1.00 mV/ 1 count	-500 to +10500 Count by 1	1.22 mV/ 2 counts	-819 to +17202 Count by 2	1.00 mV/ 1 count	-500 to +10500 Count by 1
+4 to +20 mA	Sign +14 1.28 µA/ 2 counts	+4993 to +32767 Count by 2	2.00 µA/ 2 counts	+3200 to +2100 Count by 2	1.95 µA/ 2 counts	-819 to +17407 Count by 2	1.60 µA/ 1 count	-500 to +10625 Count by 1
+1 to +5V dc	Sign +13 0.64 mV/ 4 counts	+3121 to +32767 Count by 4	1.00 mV/ 1 count	+500 to +5250 Count by 1	0.73 mV/ 3 counts	-2048 to +17407 Count by 3	0.80 mV/ 2 counts	-1250 to +10625 Count by 2
0 to +20 mA	Sign +14 1.28 µA/ 2 counts	0 to +32767 Count by 2	2.00 µA/ 2 counts	0 to +21000 Count by 2	2.44 µA/ 2 counts	0 to +17202 Count by 2	2.00 µA/ 1 count	0 to +10500 Count by 1

Table 3.9 250Hz Effective Resolution

1769-IF4 Input Range	Raw/Proportional Data Over the Full Input Range		Engineering Units Over the Full Input Range		Scaled-For-PID Over the Full Input Range		Percent Over the Full Input Range	
	Bits and Engineering Units Resolution	Decimal Range and Count Value	Resolution	Decimal Range and Count Value	Resolution	Decimal Range and Count Value	Resolution	Decimal Range and Count Value
-10 to +10V dc	Sign +11 5.13 mV/ 16 counts	±32767 Count by 16	6.00 mV/ 6 counts	±10500 Count by 6	6.10 mV/ 5 counts	-410 to +16793 Count by 5	Not Applicable	Not Applicable
0 to +5V dc	Sign +10 5.13 mV/ 32 counts	-3121 to +32767 Count by 32	6.00 mV/ 6 counts	-500 to +5250 Count by 6	5.19 mV/ 17 counts	-1638 to +17202 Count by 17	5.50 mV/ 11 counts	-1000 to +10500 Count by 11
0 to +10V dc	Sign +11 5.13 mV/ 16 counts	-1560 to +32767 Count by 16	6.00 mV/ 6 counts	-500 to +10500 Count by 6	5.49 mV/ 9 counts	-819 to +17202 Count by 9	6.00 mV/ 6 counts	-500 to +10500 Count by 6
+4 to +20 mA	Sign +11 10.25 µA/ 16 counts	+4993 to +32767 Count by 2	11.00 µA/ 11 counts	+3200 to +2100 Count by 11	10.74 µA/ 11 counts	-819 to +17407 Count by 11	11.20 µA/ 7 counts	-500 to +10625 Count by 7
+1 to +5V dc	Sign +10 5.13 mV/ 32 counts	+3121 to +32767 Count by 32	6.00 mV/ 6 counts	+500 to +5250 Count by 6	5.37 mV/ 22 counts	-2048 to +17407 Count by 22	5.20 mV/ 13 counts	-1250 to +10625 Count by 13
0 to +20 mA	Sign +11 10.25 µA/ 16 counts	0 to +32767 Count by 16	11.00 µA/ 11 counts	0 to +21000 Count by 11	10.99 µA/ 9 counts	0 to +17202 Count by 9	12.00 µA/ 6 counts	0 to +10500 Count by 6

Table 3.10 500 Hz Effective Resolution

1769-IF4 Input Range	Raw/Proportional Data Over the Full Input Range		Engineering Units Over the Full Input Range		Scaled-For-PID Over the Full Input Range		Percent Over the Full Input Range	
	Bits and Engineering Units Resolution	Decimal Range and Count Value	Resolution	Decimal Range and Count Value	Resolution	Decimal Range and Count Value	Resolution	Decimal Range and Count Value
-10 to +10V dc	Sign +9 20.51 mV/ 64 counts	±32767 Count by 64	21.00 mV/ 21 counts	±10500 Count by 21	20.75 mV/ 17 counts	-410 to +16793 Count by 17	Not Applicable	Not Applicable
0 to +5V dc	Sign +8 20.51 mV/ 128 counts	-3121 to +32767 Count by 128	21.00 mV/ 21 counts	-500 to +5250 Count by 21	20.75 mV/ 68 counts	-1638 to +17202 Count by 68	21.00 mV/ 42 counts	-1000 to +10500 Count by 42
0 to +10V dc	Sign +9 20.51 mV/ 64 counts	-1560 to +32767 Count by 64	21.00 mV/ 21 counts	-500 to +10500 Count by 21	20.75 mV/ 34 counts	-819 to +17202 Count by 34	21.00 mV/ 21 counts	-500 to +10500 Count by 21
+4 to +20 mA	Sign +9 41.02 µA/ 64 counts	+4993 to +32767 Count by 64	42.00 µA/ 42 counts	+3200 to +2100 Count by 42	41.02 µA/ 42 counts	-819 to +17407 Count by 42	41.60 µA/ 26 counts	-500 to +10625 Count by 26
+1 to +5V dc	Sign +8 20.51 mV/ 128 counts	+3121 to +32767 Count by 128	21.00 mV/ 21 counts	+500 to +5250 Count by 21	20.75 mV/ 84 counts	-2048 to +17407 Count by 84	20.8 mV/ 52 counts	-1250 to +10625 Count by 52
0 to +20 mA	Sign +9 41.02 µA/ 64 counts	0 to +32767 Count by 64	42.00 µA/ 42 counts	0 to +21000 Count by 42	41.51 µA/ 34 counts	0 to +17202 Count by 34	42.00 µA/ 21 counts	0 to +10500 Count by 21

1769-IF8 Input Module Addressing

The1769-IF8 memory map shows the output, input, and configuration tables for the 1769-IF8.

Figure 3.4 1769-IF8 Memory Map

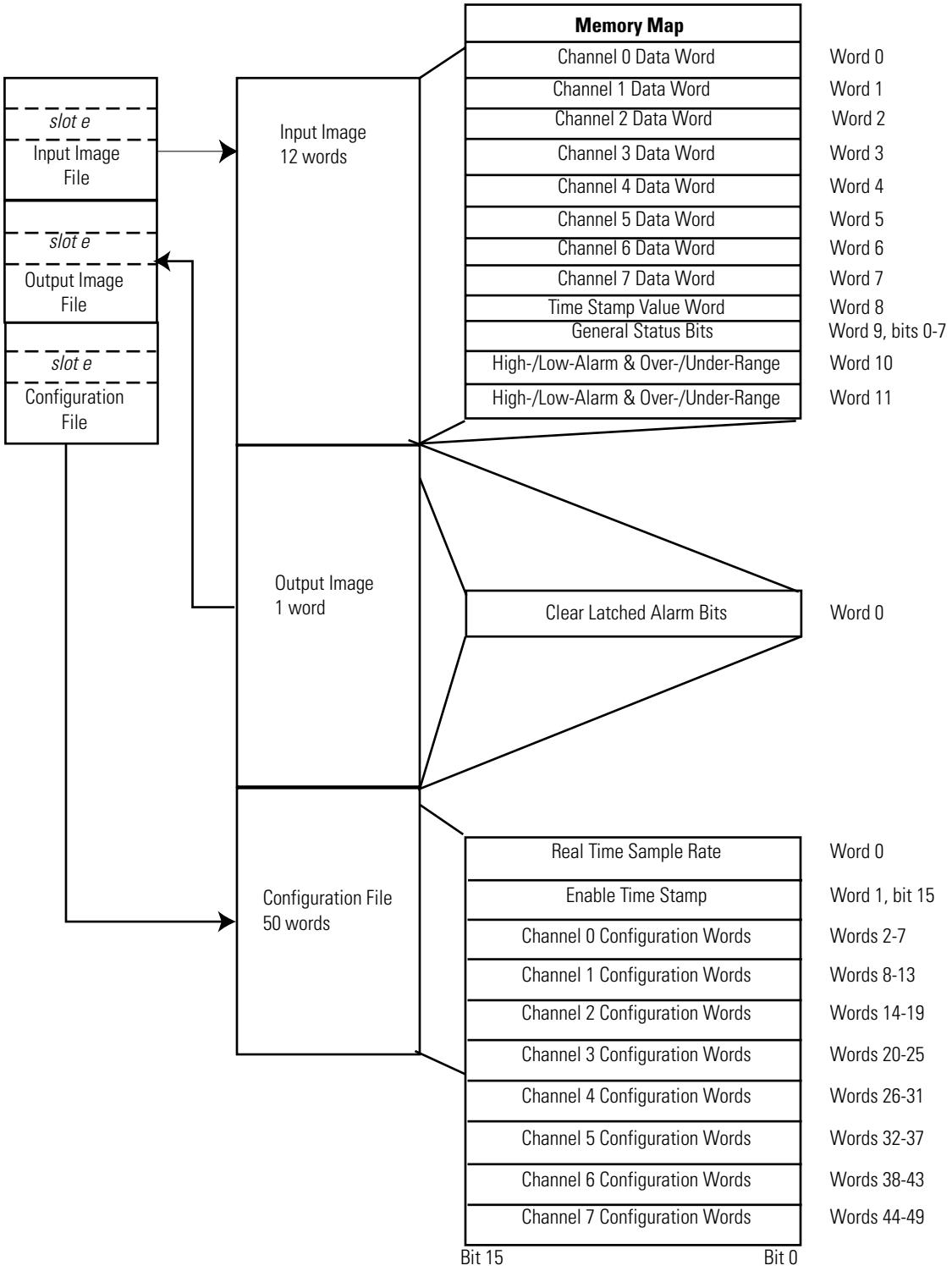

1769-IF8 Input Image

The 1769-IF8 input image file represents data words and status bits. Input words 0 through 7 hold the input data that represents the value of the analog inputs for channels 0 through 7. These data words are valid only when the channel is enabled and there are no errors. Input words 9 and 11 hold the status bits. To receive valid status information, the channel must be enabled.

TIP You can access information in the input image file using the programming software configuration screen.

1769-IF8 Output Image

The 1769-IF8 output image file contains the clear alarm control bits for the high- and low-alarm bits on each input channel. These bits are used to clear alarms when alarms are latched.

TIP You can access information in the output image file using the programming software configuration screen.

1769-IF8 Configuration File

The configuration file contains information that you use to define the way a specific channel functions. The configuration file is explained in more detail in 1769-IF8 Configuration Data File on page 3-20.

TIP Not all controllers support program access to the configuration file. Refer to your controller's user manual.

1769-IF8 Input Data File

The input data table lets you access analog input module read data for use in the control program, via word and bit access. The data table structure is shown in the table below. For each input module, slot x, words 0-7 in the input data file contain the analog values of the inputs.

Table 3.11 1769-IF8 Input Data Table

Word	Bit Position															
	15	14	13	12	11	10	9	8	7	6	5	4	3	2	1	0
0	SGN	Analog Input Data Channel 0														
1	SGN	Analog Input Data Channel 1														
2	SGN	Analog Input Data Channel 2														
3	SGN	Analog Input Data Channel 3														
4	SGN	Analog Input Data Channel 4														
5	SGN	Analog Input Data Channel 5														
6	SGN	Analog Input Data Channel 6														
7	SGN	Analog Input Data Channel 7														
8	Nu	Time Stamp Value														
9	Nu	Nu	Nu	Nu	Nu	Nu	Nu	Nu	S7	S6	S5	S4	S3	S2	S1	S0
10	L3	H3	U3	O3	L2	H2	U2	O2	L1	H1	U1	O1	L0	H0	U0	O0
11	L7	H7	U7	O7	L6	H6	U6	O6	L5	H5	U5	O5	L4	H4	U4	O4

1769-IF8 Input Data Values

Words 0 through 7 contain the converted analog input data from the field device. The most significant bit (MSB) is the sign bit, which is in two's complement format. (Nu indicates not used with the bit set to 0.)

General Status Bits (S0 through S7)

Word 9, bits 0 through 7 contain the general operational status bits for input channels 0 through 7. If set (1), these bits indicate an error associated with that channel. The over- and under-range bits and the high- and low-alarm bits for channels 0 through 7 are logically ORed to the appropriate general status bit.

Low Alarm Flag Bits (L0 through L7)

Word 10, bits 3, 7, 11, and 15 and Word 11, bits 3, 7, 11, 15 contain the low alarm flag bits for input channels 0 through 7. If set (1), these bits indicate the input signal is outside the user-defined range. The module continues to convert analog data to minimum full-range values. The bit is automatically reset (0) when the low alarm condition clears, unless the channel's alarm bits are latched. If the channel's alarm bits are latched, a set (1) low alarm flag bit clears via the corresponding Clear Alarm Latch bit in your output data file.

High Alarm Flag Bits (H0 through H7)

Word 10, bits 2, 6, 10, 14 and Word 11, bits 2, 6, 10, 14 contain the high alarm flag bits for input channels 0 through 7 and applies to all input types. If set (1), the input signal is output the user-defined range. The module continues to convert analog data to maximum full-range values. The bit is automatically reset (0) when the high alarm condition clears, unless the channel's alarm bits are latched. If the channel's alarm bits are latched, a set (1) high alarm flag bit clears via the corresponding Clear Alarm Latch bit in your output data file.

Over-Range Flag Bits (O0 through O7)

Over-range bits for channels 0 through 7 are contained in Word 10, bits 0, 4, 8, 12 and Word 11, bits 0, 4, 8, 12. They apply to all input types. When set (1), this bit indicates input signals beyond the normal operating range. However, the module continues to convert analog data to the maximum full range value. The bit is automatically reset (0) by the module when the over-range condition is cleared and the data value is within the normal operating range.

Under-Range Flag Bits (U0 through U7)

Under-range bits for channels 0 through 7 are contained in Word 10, bits 1, 5, 9, 13 and Word 11, bits 1, 5, 9, 13. They apply to all input types. When set (1), this bit indicates input signals below the normal operating range. It may also indicate an open circuit condition, when the module is configured for the 4 to 20 mA range. However, the module continues to convert analog data to the minimum full range value. The bit is automatically reset (0) by the module when the under-range condition is cleared and the data value is within the normal operating range.

Time Stamp Value (Word 8)

The 1769-IF8 supports a 15-bit rolling timestamp that is updated during each new sampling period of the analog inputs. The timestamp has a 1 ms resolution. The timestamp value is placed in the input image file, word 8, for each module input data update (if the timestamp function is enabled). Enable and/or disable this timestamp in the configuration file.

1769-IF8 Output Data File

The output data table lets you access analog output module write data for use in the control program, via word and bit access. The data table structure is shown in the table below.

Table 3.12 1769-IF8 Output Data Table

Word	Bit Position															
	15	14	13	12	11	10	9	8	7	6	5	4	3	2	1	0
0	CL[1] L7	CL[2] H7	CL L6	CL H6	CL L5	CL H5	CL L4	CL H4	CL L3	CL H3	CL L2	CL H2	CL L1	CL H1	CL L0	CL H0

(1) CL Lx = Cancel Low Process Alarm Latch x. This lets you individually cancel each low process alarm latch. Cancel = 1.

(2) CL Hx = Cancel High Process Alarm Latch x. This lets you individually cancel each high process alarm latch.

These bits are written during run mode to clear any latched low- and high-process alarms. The alarm is unlatched when the unlatch bit is set (1) and the alarm condition no longer exists. If the alarm condition persists, then the unlatch bit has no effect until the alarm condition no longer exists. You need to keep the unlatch bit set until verification from the appropriate input channel status word that the alarm status bit has cleared (0). Then you need to reset (0) the unlatch bit. The module will not latch an alarm condition if a transition from no alarm to alarm occurs while a channel's clear latch bit is set.

1769-IF8 Configuration Data File

The configuration file lets you determine how each individual input channel will operate. Parameters such as the input type and data format are set up using this file. This data file is writable and readable. The default value of the configuration data table is all zeros. The structure of the channel configuration file is shown below.

Table 3.13 1769-IF8 Configuration Data Table

Word	Bit Position															
	15	14	13	12	11	10	9	8	7	6	5	4	3	2	1	0
0	Real Time Sample Value															
1	ETS	Reserved														
2	EC	Reserved				EA	AL	EI[1]	Reserved				Input Filter Sel Chl0			
3	Reserved					Inpt Dta Fm Chl0			Reserved				Inpt Tp/RngeSel Chl0			
4	S	Process Alarm High Data Value Channel 0														
5	S	Process Alarm Low Data Value Channel 0														
6	S	Alarm Dead Band Value Channel 0														
7	Reserved															
8	EC	Reserved				EA	AL	EI[1]	Reserved				Inpt Filter Sel Chl1			
9	Reserved					Inpt Dta Fm Chl1			Reserved				Inpt Tp/RngeSel Chl1			
10	S	Process Alarm High Data Value Channel 1														
11	S	Process Alarm Low Data Value Channel 1														

Table 3.13 1769-IF8 Configuration Data Table

12	S	Alarm Dead Band Value Channel 1					
13	Reserved						
14	EC	Reserved	EA	AL	EI[1]	Reserved	Input Filter Sel Chl2
15	Reserved		Inpt Dta Fm Chl2			Reserved	Inpt Tp/RngeSel Chl2
16	S	Process Alarm High Data Value Channel 2					
17	S	Process Alarm Low Data Value Channel 2					
18	S	Alarm Dead Band Value Channel 2					
19	Reserved						
20	EC	Reserved	EA	AL	EI[1]	Reserved	Input Filter Sel Chl3
21	Reserved		Inpt Dta Fm Chl3			Reserved	Inpt Tp/RngeSel Chl3
22	S	Process Alarm High Data Value Channel 3					
23	S	Process Alarm Low Data Value Channel 3					
24	S	Alarm Dead Band Value Channel 3					
25	Reserved						
26	EC	Reserved	EA	AL	EI[1]	Reserved	Input Filter Sel Chl4
27	Reserved		Inpt Dta Fm Chl4			Reserved	Inpt Tp/RngeSel Chl4
28	S	Process Alarm High Data Value Channel 4					
29	S	Process Alarm Low Data Value Channel 4					
30	S	Alarm Dead Band Value Channel 4					
31	Reserved						
32	EC	Reserved	EA	AL	EI[1]	Reserved	Input Filter Sel Chl5
33	Reserved		Inpt Dta Fm Chl5			Reserved	Inpt Tp/RngeSel Chl5
34	S	Process Alarm High Data Value Channel 5					
35	S	Process Alarm Low Data Value Channel 5					
36	S	Alarm Dead Band Value Channel 5					
37	Reserved						
38	EC	Reserved	EA	AL	EI[1]	Reserved	Input Filter Sel Chl6
39	Reserved		Inpt Dta Fm Chl6			Reserved	Inpt Tp/RngeSel Chl6
40	S	Process Alarm High Data Value Channel 6					
41	S	Process Alarm Low Data Value Channel 6					
42	S	Alarm Dead Band Value Channel 6					
43	Reserved						
44	EC	Reserved	EA	AL	EI[1]	Reserved	Input Filter Sel Chl7
45	Reserved		Inpt Dta Fm Chl7			Reserved	Inpt Tp/RngeSel Chl7
46	S	Process Alarm High Data Value Channel 7					
47	S	Process Alarm Low Data Value Channel 7					
48	S	Alarm Dead Band Value Channel 7					
49	Reserved						

(1) CompactLogix L43 controllers will be able to support these interrupts.

The configuration file is typically modified using the programming software configuration screen. For information on configuring the module using MicroLogix 1500 and RSLogix 500, see Appendix B; for CompactLogix and RSLogix 5000, see Appendix C; for 1769-ADN DeviceNet Adapter and RSNetWorx, see Appendix D.

The configuration file can also be modified through the control program, if supported by the controller. The structure and bit settings are shown in Channel Configuration on page 3-22.

Channel Configuration

Each channel's configuration words consist of bit fields, the settings of which determine how the channel operates. See the table below and the descriptions that follow for valid configuration settings and their meanings. The default bit status of the configuration file is all zeros.

Table 3.14 Bit Definitions for Channel Configuration Words

Define	To Select	Make these bit settings												
		15	14	13	12	11	10	9	8	7-4	3	2	1	0
Input Filter Selection/ -3 dB Frequency	60 Hz										0	0	0	0
	50 Hz										0	0	0	1
	10 Hz										0	0	1	0
	250 Hz										0	0	1	1
	500 Hz										0	1	0	0
Enable Interrupt	Enable								1					
	Disable								0					
Process Alarm Latch	Enable							1						
	Disable							0						
Enable Process Alarms	Enable						1							
	Disable						0							
Enable Channel	Enable	1												
	Disable	0												

Table 3.15 Bit Definitions for Input Range and Input Data

Define	Indicate this	These bit settings								
		15-11	10	9	8	7-4	3	2	1	0
Input Range Select	-10 to +10V dc						0	0	0	0
	0 to 5V dc						0	0	0	1
	0 to 10V dc						0	0	1	0
	4 to 20 mA						0	0	1	1
	1 to 5V dc						0	1	0	0
	0 to 20 mA						0	1	0	1
Input Data Format Select	Raw/Proportional Counts		0	0	0					
	Engineering Units		0	0	1					
	Scaled for PID		0	1	0					
	Percent Range		0	1	1					

Enable/Disable Channel

This configuration selection lets each channel to be individually enabled.

TIP When a channel is not enabled (0), no voltage or current input is provided to the controller by the A/D converter.

Input Filter Selection

The input filter selection field lets you select the filter frequency for each channel and provides system status of the input filter setting for analog input channels 0 through 3. The filter frequency affects the noise rejection characteristics, as explained below. Select a filter frequency considering acceptable noise and step response time.

Noise Rejection

The 1769-IF8 uses a digital filter that provides noise rejection for the input signals. The filter is programmable, allowing you to select from four filter frequencies for each channel. The digital filter provides -3 db (50% amplitude) attenuation at the selected filter frequency. A lower frequency (60 Hz versus 250 Hz) can provide better noise rejection but it increases channel update time. Transducer power supply noise, transducer circuit noise, or process variable irregularities may also be sources of normal mode noise.

Common Mode Rejection is better than 60 dB at 50 and 60 Hz, with the 50 and 60 Hz filters selected, respectively. The module performs well in the presence of common mode noise as long as the signals applied to the user plus and minus input terminals do not exceed the common mode voltage rating (± 10 V) of the module. Improper earth ground may be a source of common mode noise.

Channel Step Response

The selected channel filter frequency determines the channel's step response. The step response is the time required for the analog input signal to reach 100% of its expected final value. This means that if an input signal changes faster than the channel step response, a portion of that signal will be attenuated by the channel filter.

Channel Cut-Off Frequency

The -3 dB frequency is the filter cut-off frequency. The cut-off frequency is defined as the point on the frequency response curve where frequency components of the input signal are passed with 3 dB of attenuation. All input frequency components at or below the cut-off frequency are passed by the digital filter with less than 3 dB of attenuation. All frequency components above the cut-off frequency are increasingly attenuated.

The cut-off frequency for each channel is defined by its filter frequency selection and is equal to the filter frequency setting. Choose a filter frequency so that your fastest changing signal is below that of the filter's cut-off frequency. The cut-off frequency should not be confused with the update time. The cut-off frequency relates to how the digital filter attenuates frequency components of the input signal. The update time defines the rate at which an input channel is scanned and its channel data word is updated.

Module Update Time and Scanning Process

The module update time is defined as the time required for the module to sample and convert the input signals of all enabled input channels and provide the resulting data values to the processor. Module update time can be calculated by adding the sum of all enabled channel times. Channel times include channel scan time, channel switching time, and reconfiguration time. The module sequentially samples the channels in a continuous loop.

The 1769-IF8 uses two parallel sampling loops as shown in Figure 3.5 to update the entire module (all 8 channels) in an amount of time equal to only four channel update times. The module performs parallel channel sampling on pairs of inputs. Channels 0 and 4 are a pair. The other input channel pairs are 1 and 5, 2 and 6, and 3 and 7.

Figure 3.5 Sequential Sampling

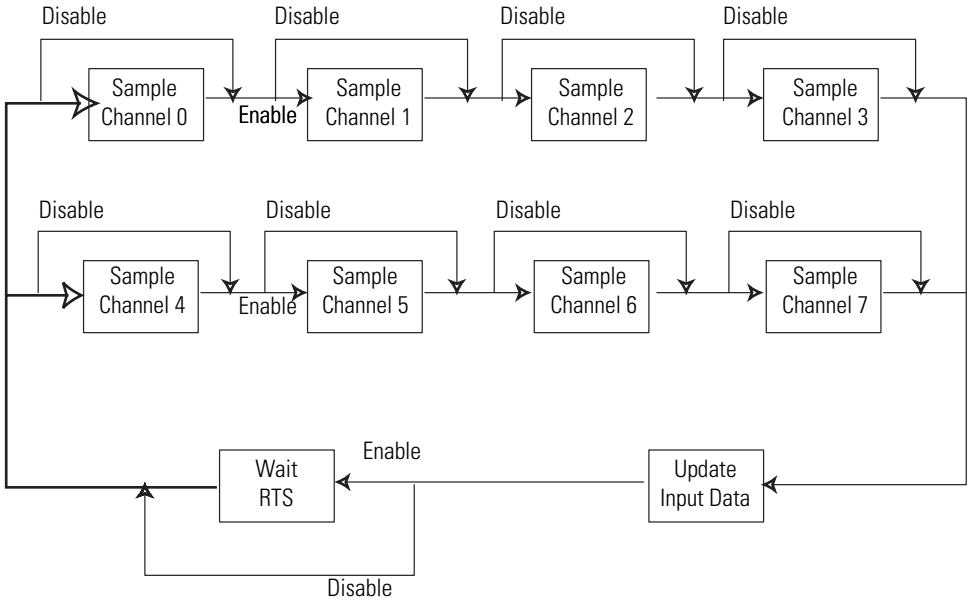

Module update time is calculated as follows:

- Slowest channel update time of pair 0 and 4 (determined by the filter setting selected for each channel and the channel update times from Table 3.16 - channel update time for a channel that is not enabled is equal to 0)

  PLUS

- Slowest channel update time of pair 1 and 5

  PLUS

- Slowest channel update time of pair 2 and 6

  PLUS

- Slowest channel update time of pair 3 and 7

If you use real-time sampling, the user-configured sample rate is used as the module update time.

Table 3.16 Filter Frequency and Update Times

Filter Frequency	Update Time per Channel	Update Time per Module[1]
10 Hz	100 ms	400 ms
50 Hz	30 ms	120 ms
60 Hz	30 ms	120 ms
250 Hz	9 ms	36 ms
500 Hz	6 ms	24 ms

(1) Module update time applies if you use all channel pairs and all enabled channels, and all the enabled channels use the filter frequency from the first column.

Examples of Calculating Module Update Time

EXAMPLE

1. Two Channels Enabled with Identical Filter Setting, But Not a Channel Pair

The following example calculates the 1769-IF8 module update time for two channels enabled with any configuration and a 500 Hz filter but the enabled channels are not a channel pair.

- Channel 0: ±10V dc with 500 Hz filter
- Channel 1: 0…10V dc with 500 Hz filter

Module Update Time = [Greater of Channel 0 Update Time or Channel 4 Update Time]
+ [Greater of Channel 1 Update Time or Channel 5 Update Time]

12 ms = [Greater of 6 ms or 0 ms] + [Greater of 6 ms or 0 ms]

EXAMPLE

2. Two Channels Enabled with Different Filter Settings, But are a Channel Pair

The following example calculates the 1769-IF8 module update time for two channels enabled with any configuration, with different filter settings, but are a channel pair.

- Channel 0: ±10V dc with 60 Hz filter
- Channel 4: 0…10V dc with 500 Hz filter

Module Update Time = [Greater of Channel 0 Update Time or Channel 4 Update Time]

30 ms = [Greater of 30 ms or 6 ms]

IMPORTANT

Configuring the 1769-IF8 module to take advantage of channel pairs can result in module update times that are significantly faster than configuring the 1769-IF8 modules without such channel assignment optimization.

Input Type/Range Selection

This selection along with proper input wiring lets you configure each channel individually for current or voltage ranges and provides the ability to read the configured range selections.

Input Data Selection Formats

This selection configures channels 0 through 3 to present analog data in any of the following formats:

- Raw/Proportional Data
- Engineering Units
- Scaled-for-PID
- Percent Range

Raw/Proportional Data

The value presented to the controller is proportional to the selected input and scaled into the maximum data range allowed by the bit resolution of the A/D converter and filter selected. The full range for a ±10Vdc user input is -32767 to +32767. See Table 3.17 Valid Input Data on page 3-28.

Engineering Units

The module scales the analog input data to the actual current or voltage values for the selected input range. The resolution of the engineering units is dependent on the range selected and the filter selected. See Table 3.17 Valid Input Data on page 3-28.

Scaled-for-PID

The value presented to the controller is a signed integer with zero representing the lower user range and 16383 representing the upper user range. Allen-Bradley controllers, such as the MicroLogix 1500, use this range in their PID equations. The amount over and under user range (full scale range -410 to 16793) is also included. See Table 3.17 Valid Input Data on page 3-28.

Percent Range

The input data is presented as a percentage of the user range. For example, 0V to 10V dc equals 0% to 100%. See Table 3.17 on page 3-28.

Valid Input Data Word Formats/Ranges

The following table shows the valid formats and min./max. data ranges provided by the module.

Table 3.17 Valid Input Data

<table>
<tr><th rowspan="2">1769-IF8 Normal Operating Input Range</th><th rowspan="2">Full Range (Includes amounts Over and Under Normal Operating Range)</th><th>Raw/Proportional Data</th><th>Engineering Units</th><th colspan="2">Scaled-for-PID</th><th colspan="2">Percent</th></tr>
<tr><th colspan="2">Full Range</th><th>Normal Operating Range</th><th>Full Range</th><th>Normal Operating Range</th><th>Full Range</th></tr>
<tr><td>-10V to +10V dc</td><td>+10.5V to -10.5V</td><td>-32767 to +32767</td><td>-10500 to +10500</td><td rowspan="6">0 to 16383</td><td>-410 to 16793</td><td>-100 to +100%</td><td>-105.00 to 105.00%</td></tr>
<tr><td>0V to 5V dc</td><td>0.0V to 5.25V</td><td>-27068 to +32767</td><td>0 to 5250</td><td rowspan="2">0 to 17202</td><td rowspan="5">0 to 100%</td><td rowspan="2">0 to 105.00%</td></tr>
<tr><td>0V to 10V dc</td><td>0.0V to 10.5V</td><td>-29788 to +32767</td><td>0 to 10500</td></tr>
<tr><td>4 mA to 20 mA</td><td>3.2 mA to 21 mA</td><td rowspan="3">-32767 to +32767</td><td>3200 to 21000</td><td>-819 to +17407</td><td>-5.00 to +106.25%</td></tr>
<tr><td>1.0V to 5V dc</td><td>0.5V to 5.25V</td><td>500 to 5250</td><td>-2048 to 17407</td><td>-12.50 to +106.25%</td></tr>
<tr><td>0 mA to 20 mA</td><td>0 mA to 21 mA</td><td>0 to 21000</td><td>0 to 17202</td><td>0.00 to 105.00%</td></tr>
</table>

1769-IF8 Real Time Sampling

This parameter instructs the module how often to scan its input channels and obtain all available data. After the channels are scanned, the module places the data into the Input Data file. This feature is applied on a module-wide basis.

During module configuration, you specify a Real Time Sampling (RTS) period by entering a value into Word 0 of the Configuration Data file. This value entered in Word 0 can be in the range of 0 to 5000 and indicates the sampling rate the module will use in 1 ms increments.

If you enter a 0 for the Real Time Sample Rate, the module should scan its inputs at as fast a rate as possible, controlled by the number of enabled channels and the filter setting selected for those channels.

The module compares the Real Time Sample Rate value entered in Word 0 of the Configuration Data file with a calculated module update time, again based on the number of enabled channels and the filter setting selected for those channels. If the value entered for the Real Time Sample Rate is smaller than the calculated module update time, the module indicates a configuration error.

The longest Real Time Sample Rate supported by the 1769-IF8 is 5 s, the maximum value for Word 0 of the Configuration Data file is 5000 decimal.

1769-IF8 Process Alarms

Process alarms alert you when the module has exceeded configured high or low limits for **each channel**. You can latch process alarms. These are set at two user configurable alarm trigger points:

- Process Alarm High
- Process Alarm Low

Each input channel's process alarms are controlled by bits in the Configuration Data file. Enable alarms for a channel by setting (1) the EA bit for that channel. Set the AL bit (1) for a channel to enable the alarm latching.

Each channel's process alarm high data value and process alarm low data value are set by entering values in the corresponding words of the Configuration Data file for that channel.

The values entered for a channel's process alarm data values must be within the normal operating data range as set by the input Data Format selected for that channel. If a process alarm data value is entered that is outside the normal operating data range set for a channel, the module indicates a configuration error.

Alarm Deadband

You may configure an **Alarm Deadband** to work with the process alarms. The deadband lets the process alarm status bit to remain set, despite the alarm condition disappearing, as long as the input data remains within the deadband of the process alarm.

Figure 3.6 shows input data that sets each of the two alarms at some point during module operation. In this example, Latching is disabled; therefore, each alarms turns OFF when the condition that caused it to set ceases to exist.

Figure 3.6 Alarm Deadbands

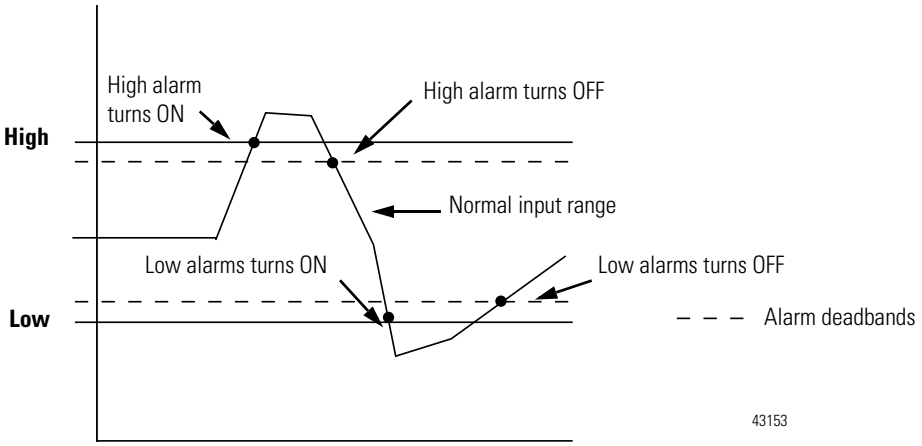

The value entered for a channel's alarm deadband value must be within the normal operating data range as set by the Input Data Format selected for that channel. If an alarm deadband value is entered that is outside the normal operating data range set for a channel, the module indicates a configuration error.

The module also checks for an alarm deadband value that is less than 0 or large enough to exceed one or both of the channel's full range limits. When one of these conditions occurs, the module changes the alarm deadband value that is in violation to one that is allowed. A deadband value less than 0 is set at 0. A deadband value that when added to the process alarm low data value or subtracted from the process alarm high data value results in a value that exceeds the full range limits of the channel is adjusted to the first, smaller value that eliminates this full range violation.

Notes:

Module Data, Status, and Channel Configuration for the Output Modules

This chapter examines the analog output module's output data file, input data file, channel status, and channel configuration words.

1769-OF2 Output Module Memory Map

The 1769-OF2 memory map shows the output, input, and configuration tables for the 1769-OF2.

Figure 4.1 1769-OF2 Memory Map

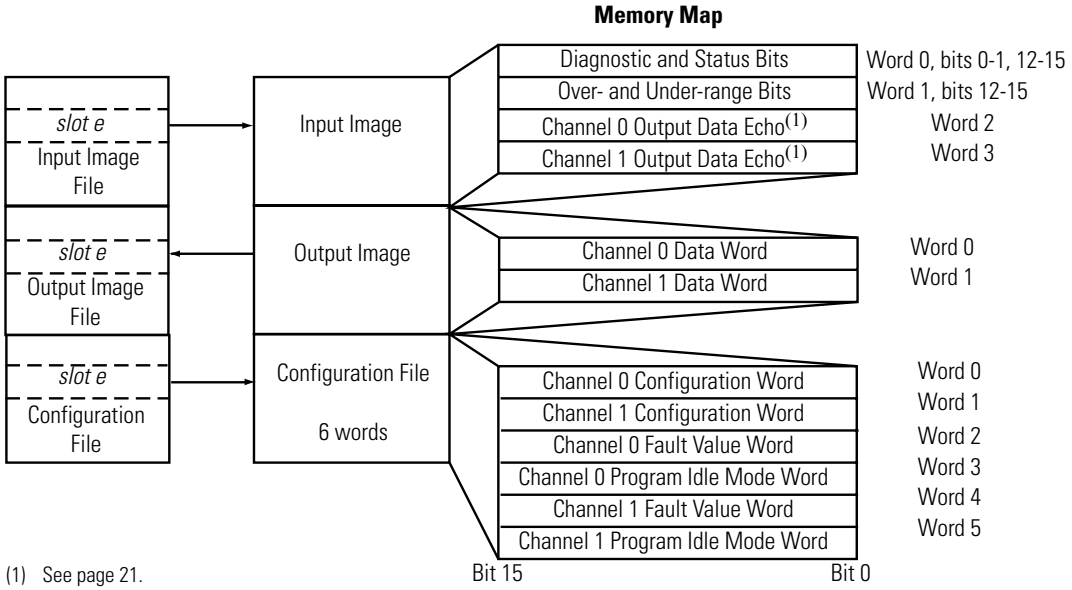

(1) See page 21.

1769-OF2 Output Data File

The structure of the output data file is shown in the table below. Words 0 and 1 contain the converted analog output data for channels 0 and 1, respectively. The most significant bit is the sign bit.

Table 4.1 1769-OF2 Output Data Table

Word/Bit	15	14	13	12	11	10	9	8	7	6	5	4	3	2	1	0
Word 0	SGN	Analog Output Data Channel 0														
Word 1	SGN	Analog Output Data Channel 1														

1769-OF2 Input Data File

This data table file provides immediate access to channel diagnostic information and analog output data at the module for use in the control program. To receive valid data, you must enable the channel. The data table structure is described below.

Table 4.2 1769-OF2 Input Data Table

Word/Bit	15	14	13	12	11	10	9	8	7	6	5	4	3	2	1	0
Word 0	D0	H0	D1	H1	Not Used (bits set to 0)										S1	S0
Word 1	U0	O0	U1	O1	Bits 0 - 11 set to 0											
Word 2	SGN	Channel 0 - Output Data Loopback/Echo														
Word 3	SGN	Channel 1 - Output Data Loopback/Echo														

1769-OF2 Diagnostic Bits (D0 and D1)

When set (1), these bits indicate a broken output wire or high load resistance (not used on voltage outputs). Bit 15 represents channel 0; bit 13 represents channel 1.

1769-OF2 Hold Last State Bits (H0 and H1)

These bits indicate when channel 0 (bit 14) or channel 1 (bit 12) is in a hold last state condition. When one of these bits is set (1), the corresponding channel is in the hold state. Output data will not change until the condition which caused the hold last state to occur is removed. The bit is reset (0) for all other conditions.

TIP MicroLogix 1500 controllers **do not** support the hold last state function. Refer to your controller's user manual for details.

1769-OF2 Over-Range Flag Bits (O0 and O1)

Over-range bits for channels 0 and 1 are contained in word 1, bits 14 and 12. When set, the over-range bit indicates that the controller is attempting to drive the analog output above its normal operating range. However, the module continues to convert analog output data to a maximum full range value. The bit is automatically reset (0) by the module when the over-range condition is cleared (the output is within the normal operating range). The over-range bits apply to all output ranges. Refer to Table 4.5 1769-OF2 Valid Output Data Table on page 4-12 to view the normal operating and over-range areas.

1769-OF2 Under-Range Flag Bits (U0 and U1)

Under-range bits for channels 0 and 1 are contained in word 1, bits 15 and 13. When set (1), the under-range bit indicates that the controller is attempting to drive the analog output below its normal operating range. However, the module continues to convert analog output data to a minimum full range value. The bit is automatically reset (0) by the module when the under-range condition is cleared (the output is within the normal operating range). The under-range bits apply to all output ranges. Refer to Table 4.5 1769-OF2 Valid Output Data Table on page 4-12 to view the normal operating and under-range areas.

1769-OF2 General Status Bits (S0 and S1)

Word 0, bits 0 and 1 contain the general status information for output channels 0 and 1. If set (1), these bits indicate an error associated with that channel. The over-range and under-range bits and the diagnostic bit are logically ORed to this position.

1769-OF2 Output Data Loopback/Echo

Words 2 and 3 provide output loopback/data echo through the input array for channels 0 and 1, respectively. The value of the data echo is the analog value currently being converted on-board the module by the D/A converter. This ensures that the logic-directed state of the output is true. Otherwise, the state of the output could vary depending on controller mode.

Under normal operating conditions, the data echo value is the same value that is being sent from the controller to the output module. Under abnormal conditions, the values may differ. For example:

1. During run mode, the control program could direct the module to a value over or under the defined full range. In that case, the module raises the over- or under-range flag and continues to convert and data echo up to the defined full range. However, upon reaching either the maximum upper or lower full range value, the module stops converting and echoes back that maximum upper or lower full range value, not the value being sent from the controller.

2. During program or fault mode with Hold Last State or User-Defined Value selected, the module echoes the hold last value or alternate value you selected. For more information on the hold last and user-defined values, see 1769-OF2 Fault Value (Channel 0 and 1) on page 4-11 and 1769-OF2 Program/Idle Value (Channel 0 and 1) on page 4-11.

1769-OF2 Configuration Data File

The configuration file lets you determine how each individual output channel will operate. Parameters such as the output type/range and data format are set up using this file. The configuration data file is writable and readable. The default value for the configuration data file is all zeros. The structure of the channel configuration file is explained below. Words 0 and 1 are the channel configuration words for channels 0 and 1. They are described in 1769-OF2 Channel Configuration on page 4-6. Words 2 through 5 are explained beginning on page 4-11.

Table 4.3 1769-OF2 Configuration Data Table[1]

Word/Bit	15	14	13	12	11	10	9	8	7	6	5	4	3	2	1	0
Word 0	E	Output Data Format Select Channel 0			Output Type/Range Select Channel 0				Not Used (set to 0)				FM0	PM0	Not Used (set to 0)	PFE0
Word 1	E	Output Data Format Select Channel 1			Output Type/Range Select Channel 1				Not Used (set to 0)				FM1	PM1	Not Used (set to 0)	PFE1
Word 2	S	Fault Value - Channel 0														
Word 3	S	Program (Idle) Value - Channel 0														
Word 4	S	Fault Value - Channel 1														
Word 5	S	Program (Idle) Value - Channel 1														

(1) The ability to change these values using your control program is not supported by all controllers. Refer to your controller manual for details.

The configuration file is typically modified using the programming software configuration screen. For information on configuring the module using MicroLogix 1500 and RSLogix 500, see Appendix B; for CompactLogix and RSLogix 5000, see Appendix C; for 1769-ADN DeviceNet Adapter and RSNetWorx, see Appendix D.

The configuration file can also be modified through the control program, if supported by the controller. The structure and bit settings are shown in 1769-OF2 Channel Configuration on page 4-6.

1769-OF2 Channel Configuration

Both channel configuration words (0 and 1) consist of bit fields, the settings of which determine how the corresponding channel operates. See the table below and the descriptions that follow for valid configuration settings and their meanings.

Table 4.4 1769-OF2 Bit Definitions for Channel Configuration Words 0 and 1

Bit(s)	Define	These bit settings																Indicate this
		15	14	13	12	11	10	9	8	7	6	5	4	3	2	1	0	
0	Program/Idle to Fault Enable									Not Used							0	Program Mode Data Applied
																	1	Fault Mode Data Applied
1	Reserved																	Reserved
2	Program/Idle Mode														0			Program Mode Hold Last State
															1			Program Mode User-Defined Value
3	Fault Mode													0				Fault Mode Hold Last State
														1				Fault Mode User-Defined Value
4-7	Reserved																	Reserved[1]
8-11	Output Type/Range Select					0	0	0	0									-10V dc to +10V dc
						0	0	0	1									0 to 5V dc
						0	0	1	0									0 to 10V dc
						0	0	1	1									4 to 20 mA
						0	1	0	0									1 to 5V dc
						0	1	0	1									0 to 20 mA
																		Not Used[2]
12-14	Output Data Format Select		0	0	0													Raw/Proportional Data
			0	0	1													Engineering Units
			0	1	0													Scaled-for-PID[3]
			0	1	1													Percent Range
																		Not Used[2]
15	Enable Channel	1																Enabled
		0																Disabled

(1) If reserved bits are not equal to zero, a configuration error occurs.

(2) Any attempt to write a non-valid (not used) bit configuration into any selection field results in a module configuration error. See Configuration Errors on page 5-6.

(3) This range is applicable to the PID function of the MicroLogix 1500 packaged controller, PLC, or SLC controllers. Logix controllers can use this or one of the other ranges for their PID functions.

1769-OF2 Enable/Disable Channel

This configuration selection (bit 15) lets each channel to be individually enabled.

TIP A channel that is not enabled has zero voltage or current at its terminal.

1769-OF2 Output Data Format Selection

This selection configures each channel to interpret data presented to it by the controller in any of the following formats:

- Raw/Proportional Data
- Engineering Units
- Scaled-for-PID
- Percent Full Range

1769-OF2 Raw/Proportional Data

The control program presents the maximum raw data value allowed by the bit resolution of the D/A converter. The full range for a ±10V dc user input is -32767 to +32767. See Table 4.5 1769-OF2 Valid Output Data Table on page 4-12.

1769-OF2 Engineering Units

The control program presents an engineering data value to the module within the current or voltage range allowed by the D/A converter. The module then scales the data to the appropriate analog output value for the selected user range. See Table 4.5 1769-OF2 Valid Output Data Table on page 4-12.

1769-OF2 Scaled-for-PID

The control program presents an integer value to the module, with zero representing the lower user range and 16383 representing the upper user range, for conversion by the D/A converter. The module then scales this data to the approximate analog output value for the selected user range. See Table 4.5 1769-OF2 Valid Output Data Table on page 4-12.

TIP Allen-Bradley controllers, such as the MicroLogix 1500, use this range in their PID equations for controlled process outputs.

1769-OF2 Percent Full Range

The control program presents the analog output data to the module as a percent of the full analog output range (for example, valve 50% open). The module scales this data to the appropriate analog output value for the selected user range. For example, 0 to 100% equals 0 to 10V dc. See Table 4.5 1769-OF2 Valid Output Data Table on page 4-12.

TIP The ±10V dc range does not support percent full range.

1769-OF2 Output Type/Range Selection

This selection, along with proper output wiring, lets you configure each output channel individually for current or voltage ranges, and provides the ability to read the range selection.

1769-OF2 Fault Mode (FM0 and FM1)

This configuration selection provides individual fault mode selection for analog output channels 0 (word 0, bit 3) and 1 (word 1, bit 3). When this selection is disabled [the bit is reset (0)] and the system enters the fault mode, the module *holds* the *last* output *state* value. This means that the analog output remains at the last converted value prior to the condition that caused the system to enter the fault mode.

IMPORTANT Hold last state is the default condition for the 1769-OF2 during a control system run-to-fault mode change.

TIP MicroLogix 1500™ does not support the analog output module's default hold last state function and resets analog outputs to zero when the system enters the fault mode.

If this selection is enabled [the bit is set (1)] and the system enters the fault mode, it commands the module to convert the *user-specified* integer value from the channel's fault value word (2 or 4) to the appropriate analog output for the range selected. If the default value, 0000, is entered, the output typically converts to the minimum value for the range selected.

EXAMPLE

- If the raw/proportional or engineering units data format is selected and zero (0000) is entered in the ±10V dc operating range, the resulting value would be 0V dc.
- If the raw/proportional or engineering units format is selected and zero is entered as the fault value in either a 1 to 5V dc or 4 to 20 mA range, a configuration error results.
- See Table 4.5 1769-OF2 Valid Output Data Table on page 4-12 for more examples.

TIP

Not all controllers support this function. Refer to your controller's user manual for details.

1769-OF2 Program/Idle Mode (PM0 and PM1)

This configuration selection provides individual program/idle mode selection for the analog channels 0 (word 0, bit 2) and 1 (word 1, bit 2). When this selection is disabled [the bit is reset (0)], the module *holds* the *last state*, meaning that the analog output remains at the last converted value prior to the condition that caused the control system to enter the program mode.

IMPORTANT

Hold last state is the default condition for the 1769-OF2 during a control system run-to-program mode change.

TIP

MicroLogix 1500™ does not support the analog output module's default hold last state function and resets analog outputs to zero when the system enters the program mode.

If this selection is enabled [the bit is set (1)] and the system enters the program mode, it commands the module to convert the *user-specified* value from the channel's program/idle value word (3 or 5) to the appropriate analog output for the range selected.

EXAMPLE

- If the default value, 0000, is used and the range selected is 0 to 20 mA, the module will output 0 mA for all data formats.
- If the raw/proportional or engineering units format is selected and zero is entered as the program/idle value in either a 1 to 5V dc or 4 to 20 mA range, a configuration error results.
- See Table 4.5 1769-OF2 Valid Output Data Table on page 4-12 for more examples.

TIP Not all controllers support this function. Refer to your controller's user manual for details.

1769-OF2 Program/Idle to Fault Enable (PFE0 and PFE1)

If a system currently in program/idle mode faults, this setting (word 0, bit 0; word 1, bit 0) determines whether the program/idle or fault mode value is applied to the output. If the selection is enabled [the bit is set (1)], the module applies the fault mode data value. If the selection is disabled [the bit is reset (0)], the module applies the program/idle mode data value. The default setting is disabled.

TIP Not all controllers support this function. Refer to your controller's user manual for details.

1769-OF2 Fault Value (Channel 0 and 1)

Using words 2 and 4 for channels 0 and 1, you can specify the values the outputs will assume when the system enters the fault mode. The default value is 0. Valid values are dependent upon the range selected in the range selection field. If the value you entered is outside the normal operating range for the output range selected, the module generates a configuration error.

For example, if you select engineering units for the ±10V dc range and enter a fault value within the normal operating range (0 to 10000), the module will configure and operate correctly. However, if you enter a value outside the normal operating range (for example 11000), the module indicates a configuration error.

TIP Not all controllers support this function. Refer to your controller's user manual for details.

1769-OF2 Program/Idle Value (Channel 0 and 1)

Use words 3 and 5 to set the integer values for the outputs to assume when the system enters the program mode. The values are dependent upon the range selected in the range selection field. If the value you entered is outside the normal operating range for the output range selected, the module generates a configuration error. The default value is 0.

TIP Not all controllers support this function. Refer to your controller's user manual for details.

1769-OF2 Valid Output Data Word Formats/Ranges

The following table shows the valid formats and data ranges accepted by the module.

Table 4.5 1769-OF2 Valid Output Data Table

OF2 Output Range	Input Value	Example Data		Output Range State	Raw/Proportional Data		Engineering Unit		Scaled-for-PID		Percent Full Range	
					Decimal Range		Decimal Range		Decimal Range		Decimal Range	
		Controller Ordered	OF2 Output		Controller Ordered	OF2 Output and Echo	Controller Ordered	OF2 Output and Echo	Controller Ordered	OF2 Output and Echo	Controller Ordered	OF2 Output and Echo
±10V dc	Over 10.5V dc	+11.0V dc	+10.5V dc	Over	N/A	N/A	11000	10500	17202	16793	N/A	N/A
	+10.5V dc	+10.5V dc	+10.5V dc	Over	32767	32767	10500	10500	16793	16793	N/A	N/A
	-10V to +10V dc	+10.0V dc	+10.0V dc	Normal	31207	31207	10000	10000	16383	16383	N/A	N/A
		0.0V dc	0.0V dc	Normal	0	0	0	0	8192	8192	N/A	N/A
		-10.0V dc	-10.0V dc	Normal	-31207	-31207	-10000	-10000	0	0	N/A	N/A
	-10.5V dc	-10.5V dc	-10.5V dc	Under	-32767	-32767	-10500	-10500	-410	-410	N/A	N/A
	Under -10.5V dc	-11.0V dc	-11.0V dc	Under	N/A	N/A	-11000	-10500	-819	-410	N/A	N/A
0V to 5V dc	Over 5.25V dc	5.5V dc	+5.25V dc	Over	N/A	N/A	5500	5250	18021	17202	11000	10500
	5.25V dc	5.25V dc	+5.25V dc	Over	32767	32767	5250	5250	17202	17202	10500	10500
	0.0V dc to 5.0V dc	5.0V dc	+5.0V dc	Normal	31207	31207	5000	5000	16383	16383	10000	10000
		0.0V dc	0.0V dc	Normal	0	0	0	0	0	0	0	0
	-0.5V dc	-0.5V dc	-0.5V dc	Under	-3121	-3121	-500	-500	-1638	-1638	-1000	-1000
	Under -0.5V dc	-1.0V dc	-0.5V dc	Under	-6241	-3121	-500	-500	-3277	-1638	-2000	-1000

Table 4.5 1769-OF2 Valid Output Data Table

OF2 Output Range	Input Value	Example Data		Output Range State	Raw/Proportional Data		Engineering Unit		Scaled-for-PID		Percent Full Range	
					Decimal Range		Decimal Range		Decimal Range		Decimal Range	
		Controller Ordered	OF2 Output		Controller Ordered	OF2 Output and Echo	Controller Ordered	OF2 Output and Echo	Controller Ordered	OF2 Output and Echo	Controller Ordered	OF2 Output and Echo
0V to 10V dc	Over 10.5V dc	11.0V dc	+10.5V dc	Over	N/A	N/A	11000	10500	18021	17202	11000	10500
	+10.5V dc	+10.5V dc	+10.5V dc	Over	32767	32767	10500	10500	17202	17202	10500	10500
	0.0V dc to 10.0V dc	+10.0V dc	+10.0V dc	Normal	31207	31207	10000	10000	16383	16383	10000	10000
		0.0V dc	0.0V dc	Normal	0	0	0	0	0	0	0	0
	-0.5V dc	-0.5V dc	-0.5V dc	Under	-1560	-1560	-500	-500	-819	-819	-500	-500
	Under -5.0V dc	-1.0V dc	-0.5V dc	Under	-3121	-1560	-1000	-500	-1638	-819	-1000	-500
4 mA to 20 mA	Over 21.0 mA	+22.0 mA	+21.0 mA	Over	N/A	N/A	22000	21000	18431	17407	11250	10625
	21.0 mA	+21.0 mA	+21.0 mA	Over	32767	32767	21000	21000	17407	17407	10625	10625
	4.0 mA to 20.0 mA	+20.0 mA	+20.0 mA	Normal	31207	31207	20000	20000	16383	16383	10000	10000
		+4.0 mA	+4.0 mA	Normal	6241	6241	4000	4000	0	0	0	0
	3.2 mA	+3.2 mA	+3.2 mA	Under	4993	4993	3200	3200	-819	-819	-500	-500
	Under 3.2 mA	0.0 mA	+3.2 mA	Under	0	4993	0	3200	-4096	-819	-2500	-500
1.0V to 5V dc	Over 5.25V dc	+5.5V dc	+5.25V dc	Over	N/A	N/A	5500	5250	18431	17407	11250	10625
	+5.25V dc	+5.25V dc	+5.25V dc	Over	32767	32767	5250	5250	17407	17407	10625	10625
	1.0V to 5.0V dc	+5.0V dc	+5.0V dc	Normal	31207	31207	5000	5000	16383	16383	10000	10000
		+1.0V dc	+1.0V dc	Normal	6241	6241	1000	1000	0	0	0	0
	0.5V dc	+0.5V dc	+0.5V dc	Under	3121	3121	500	500	-2048	-2048	-1250	-1250
	Under 0.5V dc	0.0V dc	0.0V dc	Under	0	3121	0	500	-4096	-2048	-2500	-1250

Table 4.5 1769-OF2 Valid Output Data Table

OF2 Output Range	Input Value	Example Data		Output Range State	Raw/Proportional Data		Engineering Unit		Scaled-for-PID		Percent Full Range	
					Decimal Range		Decimal Range		Decimal Range		Decimal Range	
		Controller Ordered	OF2 Output		Controller Ordered	OF2 Output and Echo	Controller Ordered	OF2 Output and Echo	Controller Ordered	OF2 Output and Echo	Controller Ordered	OF2 Output and Echo
0 mA to 20 mA	Over 21.0 mA	+22.0 mA	+21.0 mA	Over	N/A	N/A	22000	21000	18201	17202	11000	10500
	21.0 mA	21.0 mA	+21.0 mA	Over	32767	32767	21000	21000	17202	17202	10500	10500
	0.0 mA to 20.0 mA	20.0 mA	+20.0 mA	Normal	31207	31207	20000	20000	16383	16383	10000	10000
		0.0 mA	0.0 mA	Normal	0	0	0	0	0	0	0	0
	Under 0.0 mA	-1.0 mA	0.0 mA	Under	-1560	0	0	-1000	-819	0	-500	0

1769-OF2 Module Resolution

The resolution of an analog output channel depends on the output type/range and data format selected. Table 4.6 provides detailed resolution information for the 1769-OF2.

Table 4.6 1769-OF2 Output Resolution

1769-OF 2 Output Range	Raw/Proportional Data Over the Full Input Range		Engineering Units Over the Full Input Range		Scaled-For-PID Over the Full Input Range		Percent Over the Full Input Range	
	Bits and Engineering Units Resolution	Decimal Range and Count Value	Resolution	Decimal Range and Count Value	Resolution	Decimal Range and Count Value	Resolution	Decimal Range and Count Value
-10 to +10V dc	Sign +14 0.64 mV/ 2 counts	±32767 Count by 2	2.00 mV/ 2 counts	±10500 Count by 2	2.44 mV/ 2 counts	-410 to +16793 Count by 2	Not Applicable	Not Applicable
0 to +5V dc	Sign +13 0.64 mV/ 4 counts	-3121 to +32767 Count by 4	2.00 mV/ 2 counts	-500 to +5250 Count by 2	0.92 mV/ 3 counts	-1638 to +17202 Count by 3	1.00 mV/ 2 counts	-1000 to +10500 Count by 2
0 to +10V dc	Sign +14 0.64 mV/ 2 counts	-1560 to +32767 Count by 2	2.00 mV/ 2 counts	-500 to +10500 Count by 2	1.22 mV/ 2 counts	-819 to +17202 Count by 2	2.00 mV/ 2 counts	-500 to +10500 Count by 2
+4 to +20 mA	Sign +14 1.28 µA/ 2 counts	+4993 to +32767 Count by 2	2.00 µA/ 2 counts	+3200 to +2100 Count by 2	1.95 µA/ 2 counts	-819 to +17407 Count by 2	3.20 µA/ 2 counts	-500 to +10625 Count by 2
+1 to +5V dc	Sign +13 0.64 mV/ 4 counts	+3121 to +32767 Count by 4	2.00 mV/ 2 counts	+500 to +5250 Count by 2	0.73 mV/ 3counts	-2048 to +17407 Count by 3	0.80 mV/ 2 counts	-1250 to +10625 Count by 2
0 to +20 mA	Sign +14 1.28 µA/ 2 counts	0 to +32767 Count by 2	2.00 µA/ 2 counts	0 to +21000 Count by 2	2.44 µA/ 2 counts	0 to +17202 Count by 2	4.00 µA/ 2 counts	0 to +10500 Count by 2

1769-OF8C Output Module Memory Map

The 1769-OF8C memory map shows the output, input, and configuration tables for the 1769-OF8C.

Figure 4.2 1769-OF8C Memory Map

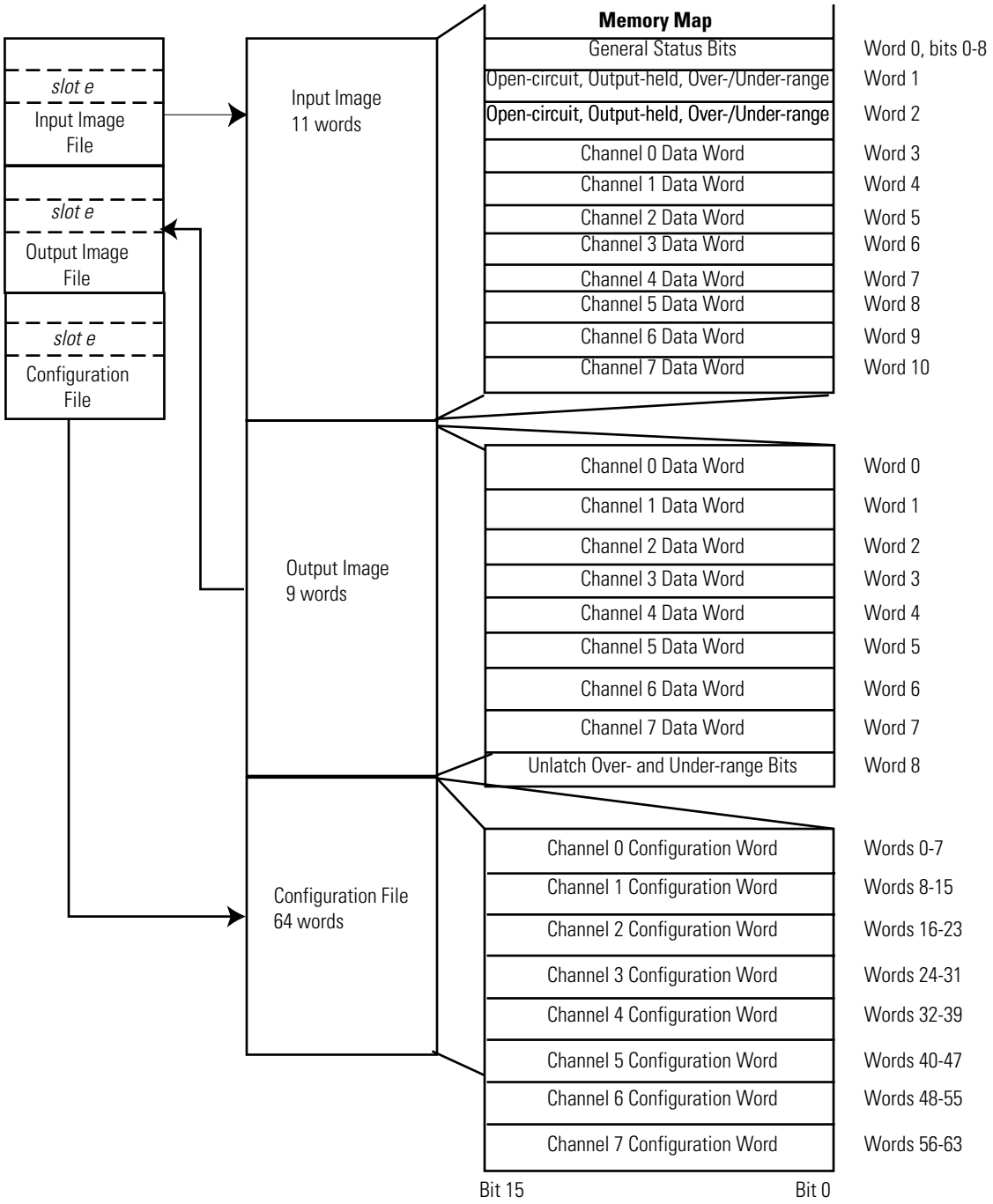

1769-OF8V Output Module Memory Map

The 1769-OF8V memory map shows the output, input, and configuration tables for the 1769-OF8V.

Figure 4.3 1769-OF8V Memory Map

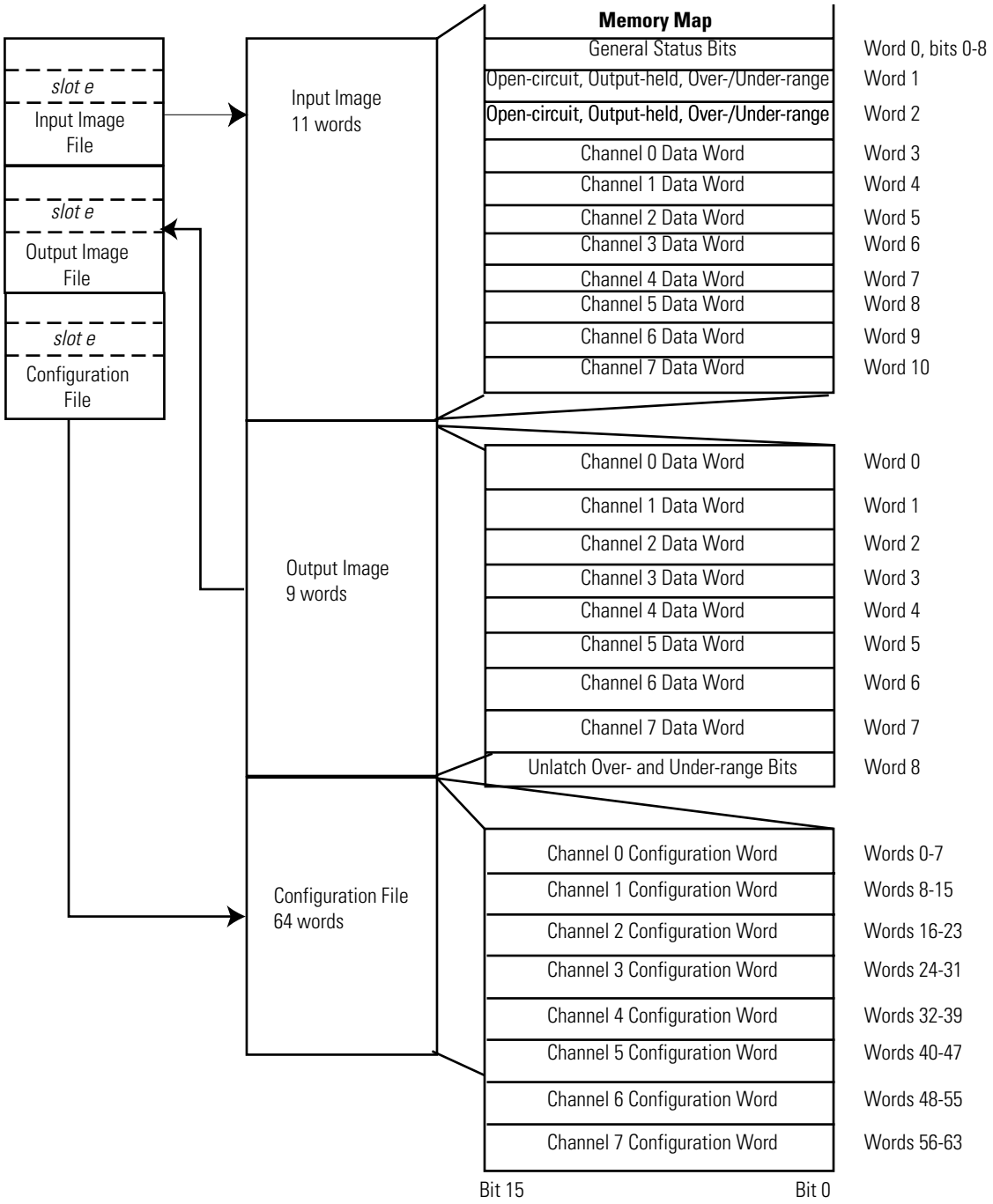

1769-OF8C and -OF8V Output Data File

The structure of the output data file is shown in the table below. Words 0 through 7 contain the commanded analog output data for channels 0 through 7, respectively. The most significant bit is the sign bit. Word 8 contains the control bits for unlatching alarms.

Table 4.7 1769-OF8C and -OF8V Output Data Table

Word	Bit Position															
	15	14	13	12	11	10	9	8	7	6	5	4	3	2	1	0
0	SGN	Analog Output Data Channel 0														
1	SGN	Analog Output Data Channel 1														
2	SGN	Analog Output Data Channel 2														
3	SGN	Analog Output Data Channel 3														
4	SGN	Analog Output Data Channel 4														
5	SGN	Analog Output Data Channel 5														
6	SGN	Analog Output Data Channel 6														
7	SGN	Analog Output Data Channel 7														
8	UU7	UO7	UU6	UO6	UU5	UO5	UU4	UO4	UU3	UO3	UU2	UO2	UU1	UO1	UU0	UO0

Channel Alarm Unlatch

These bits are written during run mode to clear any latched low- and high-clamps and under- and over-range alarms. The alarm is unlatched when the unlatch bit is set (1) and the alarm condition no longer exists. If the alarm condition persists, then the unlatch bit has no effect. You need to keep the unlatch bit set until verification from the appropriate input channel status word says that the alarm status bit has cleared (0). Then you need to reset (0) the unlatch bit. The module will not latch an alarm condition when a transition from a no alarm condition to an alarm condition occurs while a channel's clear latch bit is set.

Table 4.8 Channel Alarm Unlatch

Word	Bit Position															
	15	14	13	12	11	10	9	8	7	6	5	4	3	2	1	0
0	UU7[1]	UO7[2]	UU6	UO6	UU5	UO5	UU4	UO4	UU3	UO3	UU2	UO2	UU1	UO1	UU0	UO0

(1) Unlatch channel x under-range or low-clamp exceeded alarm.

(2) Unlatch channel x over-range or high-clamp exceeded alarm.

1769-OF8C and -OF8V Input Data File

This data table file provides immediate access to channel diagnostic information and analog output data at the module for use in the control program. To receive valid data, you must enable the channel. The data table structure is described below.

Table 4.9 1769-OF8C and -OF8V Input Data Table

Word	Bit Position															
	15	14	13	12	11	10	9	8	7	6	5	4	3	2	1	0
0								PF	S7	S6	S5	S4	S3	S2	S1	S0
1	D3	H3	U3	O3	D2	H2	U2	O2	D1	H1	U1	O1	D0	H0	U0	O0
2	D7	H7	U7	O7	D6	H6	U6	O6	D5	H5	U5	O5	D4	H4	U4	O4
3	Channel 0 Data Value															
4	Channel 1 Data Value															
5	Channel 2 Data Value															
6	Channel 3 Data Value															
7	Channel 4 Data Value															
8	Channel 5 Data Value															
9	Channel 6 Data Value															
10	Channel 7 Data Value															

1769-OF8C and -OF8V Data Values

Words 3 through 10 contain the data echo of the analog data presently commanded by the module for each output.

1769-OF8C and -OF8V Power Fail Bit (PF)

Word 0, bit 8, contains the analog power fail information for the output channels (which is isolated from the system backplane power). If set (1), this bit indicates that the analog power on the isolated output channel has failed. If external user power is selected for the module, the external power supply may be wired incorrectly or not supplying power. If internal (backplane) power is desired, be sure the selector switch on the module is in the internal power position.

1769-OF8C and -OF8V General Status Bits (S0 through S7)

Word 0, bits 0 through 7 contain the general status information for output channels 0 through 7. If set (1), these bits indicate an error associated with that channel. The over-range and under-range bits and the diagnostic bit are logically ORed to this position.

1769-OF8C and -OF8V Over-Range Flag Bits (O0 through O7)

Word 1, bits 0, 4, 8, and 12, and Word 2, bits 0, 4, 8, and 12 contain the over-range bits for channels 0 through 7. When set, the over-range bit indicates that the controller is attempting to drive the analog output above its normal operating range or above the channel's High Clamp level (if clamp limits are set for the channel). However, the module continues to convert analog output data to a maximum full range value if clamp levels are not set for the channel.

If alarm latching is not enabled for the channel, the bit is automatically reset (0) by the module when the over-range condition is cleared or the commanded value no longer exceeds the high clamp (the output is commanded to return to within the normal allowed range). The over-range bits apply to all output ranges. Refer to Table 4.17 1769-OF8C Valid Output Data Table on page 4-33 and Table 4.18 1769-OF8V Valid Output Data Table on page 4-34 to view the normal operating and over-range areas.

1769-OF8C and -OF8V Under-Range Flag Bits (U0 through U7)

Word 1, bits 1, 5, 9, and 13, and Word 2, bits 1, 5, 9, and 13 contain the under-range bits for channels 0 through 7. When set (1), the under-range bit indicates that the controller is attempting to drive the analog output below its normal operating range or below the channel's Low Clamp level (if clamp limits are set for the channel). However, the module continues to convert analog output data to a minimum full range value if clamp levels are not set for the channel.

If alarm latching is not enabled for the channel, the bit is automatically reset (0) by the module when the under-range condition is cleared or the commanded value no longer exceeds the low clamp (the output is commanded to return to within the normal allowed range). The under-range bits apply to all output ranges. Refer to Table 4.17 1769-OF8C Valid Output Data Table on page 4-33 and Table 4.18 1769-OF8V Valid Output Data Table on page 4-34 to view the normal operating and under-range areas.

1769-OF8C and -OF8V Diagnostic Bits (D0 through D7)

Word 1, bits 3, 7, 11, and 15, and Word 2, bits 3, 7, 11, and 15 contain the open-circuit diagnostic bits for input channels 0 through 7. When set (1), these bits indicate a broken output wire or high load resistance. These bits are always cleared (0) for the 1769-OF8V module since open-circuit diagnostics do not apply for analog voltage outputs.

1769-OF8C and -OF8V Output Held Bits (H0 through H7)

Word 1, bits 2, 6, 10, and 14, and Word 2, bits 2, 6, 10, and 14 contain the output held bits for input channels 0 through 7. When one of these bits is set (1), the corresponding channel is in the hold state. Output data will not change until value commanded by the controller matches the value being held by the module for any held output channel.

When the value commanded for a channel by the controller matches the value being held by the module, the Output Held bit for that channel is cleared (0). The output channel can again be directly controlled by the values commanded in the Output Data file by the controller. The control can determine the output value being held by the module for any channel whose Output Held bit is set (1) by reading words 3 to 10 of the Input Data file.

1769-OF8C and -OF8V Output Data Loopback/Echo

Words 3 through 10 provide output loopback/data echo through the input array for channels 0 through 7. The value of the data echo is the analog value currently being converted on-board the module by the D/A converter. This ensures that the logic-directed state of the output is true. Otherwise, the state of the output could vary depending on controller mode.

Under normal operating conditions, the data echo value is the same value that is being sent from the controller to the output module. Under abnormal conditions, the values may differ. For example:

1. During run mode, the control program could direct the module to a value over or under the defined full range. In that case, the module raises the over- or under-range flag and continues to convert and data echo up to the defined full range. However, upon reaching either the maximum upper or lower full range value, the module stops converting and echoes back that maximum upper or lower full range value, not the value being sent from the controller.

2. During program or fault mode with Hold Last State or User-Defined Value selected, the module echoes the hold last value or alternate value you selected. For more information on the hold last and user-defined values, see 1769-OF8C and -OF8V Fault Value on page 4-31 and 1769-OF8C and -OF8V Program/Idle Value on page 4-32.

3. When one or more of the output channel's Output Held bits are set (1). See 1769-OF8C and -OF8V Output Held Bits (H0 through H7) on page 4-21.

1769-OF8C and -OF8V Configuration Data File

The configuration file lets you determine how each individual output channel will operate. Parameters such as the output type/range and data format are set up using this file. The configuration data file is writable and readable. The default value for the configuration data file is all zeros. The structure of the channel configuration file is explained below. The channel configuration words, the first two words of each eight word group, are described in Table 4.10 1769-OF8C and -OF8V Configuration Data File on page 4-22.

Table 4.10 1769-OF8C and -OF8V Configuration Data File

Word	Description	Word	Description
0	Channel 0 Configuration Word 0	24	Channel 3 Configuration Word 0
1	Channel 0 Configuration Word 1	25	Channel 3 Configuration Word 1
2	Channel 0 Fault Value Word	26	Channel 3 Fault Value Word
3	Channel 0 Program Idle Mode Word	27	Channel 3 Program Idle Mode Word
4	Channel 0 Low Clamp	28	Channel 3 Low Clamp
5	Channel 0 High Clamp	29	Channel 3 High Clamp
6	Channel 0 Ramp Rate	30	Channel 3 Ramp Rate
7	Channel 0 Spare	31	Channel 3 Spare
8	Channel 1 Configuration Word 0	32	Channel 4 Configuration Word 0
9	Channel 1 Configuration Word 1	33	Channel 4 Configuration Word 1
10	Channel 1 Fault Value Word	34	Channel 4 Fault Value Word
11	Channel 1 Program Idle Mode Word	35	Channel 4 Program Idle Mode Word
12	Channel 1 Low Clamp	36	Channel 4 Low Clamp
13	Channel 1 High Clamp	37	Channel 4 High Clamp
14	Channel 1 Ramp Rate	38	Channel 4 Ramp Rate
15	Channel 1 Spare	39	Channel 4 Spare
16	Channel 2 Configuration Word 0	40	Channel 5 Configuration Word 0
17	Channel 2 Configuration Word 1	41	Channel 5 Configuration Word 1
18	Channel 2 Fault Value Word	42	Channel 5 Fault Value Word
19	Channel 2 Program Idle Mode Word	43	Channel 5 Program Idle Mode Word
20	Channel 2 Low Clamp	44	Channel 5 Low Clamp
21	Channel 2 High Clamp	45	Channel 5 High Clamp
22	Channel 2 Ramp Rate	46	Channel 5 Ramp Rate
23	Channel 2 Spare	47	Channel 5 Spare

Word	Description	Word	Description
48	Channel 6 Configuration Word 0	56	Channel 7 Configuration Word 0
49	Channel 6 Configuration Word 1	57	Channel 7 Configuration Word 1
50	Channel 6 Fault Value Word	58	Channel 7 Fault Value Word
51	Channel 6 Program Idle Mode Word	59	Channel 7 Program Idle Mode Word
52	Channel 6 Low Clamp	60	Channel 7 Low Clamp
53	Channel 6 High Clamp	61	Channel 7 High Clamp
54	Channel 6 Ramp Rate	62	Channel 7 Ramp Rate
55	Channel 6 Spare	63	Channel 7 Spare

Table 4.11 1769-OF8C and -OF8V Word 0 and 1 Bit Descriptions

Word/ Bit	15	14	13	12	11	10	9	8	7	6	5	4	3	2	1	0
Word 0	E	Reserved							SIU	SIO	LA	ER	FM	PM	HI	PFE
Word 1	Reserved					Output Data Format Select			Reserved					Output Type/Range		

The configuration file is typically modified using the programming software configuration screen. For information on configuring the module using MicroLogix 1500 and RSLogix 500, see Appendix B; for CompactLogix and RSLogix 5000, see Appendix C; for 1769-ADN DeviceNet Adapter and RSNetWorx, see Appendix D.

The configuration file can also be modified through the control program, if supported by the controller. The structure and bit settings are shown in 1769-OF8C and -OF8V Channel Configuration on page 4-24.

1769-OF8C and -OF8V Channel Configuration

The first two words of each eight word group in the configuration file allow you to change the parameters of each channel independently. For example, words 8 and 9 correspond to channel 1 while words 56 and 57 correspond to channel 7.

Table 4.12 1769-OF8C Channel Configuration[1]

Define	Indicate this	These bit settings															
		15	14	13	12	11	10	9	8	7	6	5	4	3	2	1	0
Program (Idle) to Fault Enable	Program (Idle) Mode Data Applied[2]																0
	Fault Mode Data Applied[2]																1
Hold for Initialization	Disabled															0	
	Enabled															1	
Program (Idle) Mode	Hold Last State[2]														0		
	User-Defined Value[2]														1		
Fault Mode	Hold Last State[2]													0			
	User-Defined Fault Value[2]													1			
Enable Ramping	Disabled												0				
	Enabled												1				
Enable Clamp/ Alarm Latching	Disabled											0					
	Enabled											1					
Enable High Clamp/ Alarm Interrupt	Disabled										0						
	Enabled										1						
Enable Low Clamp/ Alarm Interrupt	Disabled									0							
	Enabled									1							
Enable Channel	Disabled	0															
	Enabled	1															

(1) Refer to the 1769-OF8C and -OF8V Output Channel Configuration table.

(2) These functions are not supported by all controllers (e.g. MicroLogix 1500) using any configuration method. Refer to your controller manual for details.

Table 4.13 1769-OF8C and -OF8V Output Channel Configuration

	Define	Indicate this	These bit settings															
			15	14	13	12	11	10	9	8	7	6	5	4	3	2	1	0
1769-OF8C	Output Range Select	0 to 20 mA dc														0	0	0
		4 to 20 mA dc														0	0	1
	Output Data Select	Raw/Proportional Counts						0	0	0								
		Engineering Units						0	0	1								
		Scaled for PID						0	1	0								
		Percent Range						0	1	1								
1769-OF8V	Output Range Select	-10…+10V dc														0	0	0
		0…5V dc														0	0	1
		0…10V dc														0	1	0
		1…5V dc														0	1	1
	Output Data Select	Raw/Proportional Counts						0	0	0								
		Engineering Units						0	0	1								
		Scaled for PID						0	1	0								
		Percent Range						0	1	1								

1769-OF8C and -OF8V Enable/Disable Channel

This configuration selection (bit 15) allows each channel to be individually enabled.

TIP A channel that is not enabled has zero voltage or current at its terminal.

Clamping/Limiting

Clamping limits the output from the analog module to remain within a range configured by the controller, even when the controller commands an output outside that range. This safety feature sets a high clamp and a low clamp.

Once clamps are determined for a module, any data received from the controller that exceeds those clamps sets an appropriate limit alarm and transitions the output to that limit but not beyond the requested value.

For example, an application may set the high clamp on a 1769-OF8C module for 15 mA and the low clamp for 5 mA. If a controller sends a value corresponding to 16 mA to the module, the module will only apply 15 mA to its screw terminals.

Clamping is disabled on a per channel basis by entering a 0 value for both the high and low clamps in the Configuration Data file. Interrupts are generated on a high- or low-alarm by setting (1) the SIO bit (for high-clamp or over-range alarm) or setting (1) the SIU bit (for low-clamp or under-range alarm). Alarms caused by exceeding over-/under-range or clamp limits can be latched by setting (1) a channel's LA bit on a per channel basis.

Clamp/Limit Alarms

This function works directly with clamping. When a module receives a data value from the controller that exceeds clamping limits, it applies signal values at the clamping limit but also sends a status bit to the controller notifying it that the value sent exceeds the clamping limits.

With reference to the example in the Clamping/Limiting section, if a 1769-OF8C module has clamping limits of 15 mA and 5 mA but then receives data to apply 16 mA, only 15 mA is applied to the screw terminals. The module sends a status bit back to the controller informing it that the 16 mA value exceeds the module's clamping limits.

Ramping

Ramping limits the speed at which an analog output signal can change. This prevents fast transitions in the output from damaging the devices that an output module controls.

Table 4.14 Ramping Types

Ramping Type	Description
Ramp to Fault Mode	This type of ramping occurs when the present output value changes to the Fault Value after a communications fault occurs. This is the only type of ramping for the 1769-OF8C and -OF8V modules.

The ramp rate is defined in terms of the selected range/format in units per second. For example, in the 0 to 20 mA range and percent of full scale format, a ramp rate of 1000 is 10%/second (since 1000 is 10% of the total number of counts in the full scale of the 0 to 20 mA range) or a maximum of 2 mA per second. Table 4.15 and Table 4.16 describes how ramp rate is defined for all output range/types and output data formats.

Table 4.15 1769-OF8C Output Range/Types and Output Data Formats

Output Data Format Output Range/Type	Total Counts in Full Scale	Number of Counts for Every 1% of Ramp Rate	Real Units/Second for Every 1% of Ramp Rate
Proportional Counts			
0…20 mA	65534	655	0.2 mA/s
4…20 mA			0.16 mA/s
Engineering Units			
0…20 mA	21000	210	0.2 mA/s
4…20 mA	17800	178	0.16 mA/s
Scaled for PID			
0…20 mA	16383	164	0.2 mA/s
4…20 mA			0.16 mA/s
Percent of Full Scale			
0…20 mA	10000	100	0.2 mA/s
4…20 mA			0.16 mA/s

Table 4.16 1769-OF8V Output Range/Types and Output Data Formats

Output Data Format Output Range/Type	Total Counts in Full Scale	Number of Counts for Every 1% of Ramp Rate	Real Units/Second for Every 1% of Ramp Rate
Proportional Counts			
-10…+10V	65534	655	0.2V/s
0…5V			0.05V/s
0…10V			0.1V/s
1…5V			0.04V/s
Engineering Units			
-10…+10V	21000	210	0.2V/s
0…5V	5750	58	0.05V/s
0…10V	11000	110	0.1V/s
1…5V	4750	48	0.04V/s
Scaled for PID			
-10…+10V	16383	164	0.2V/s
0…5V			0.05V/s
0…10V			0.1V/s
1…5V			0.04V/s

Table 4.16 1769-OF8V Output Range/Types and Output Data Formats

Output Data Format Output Range/Type	Total Counts in Full Scale	Number of Counts for Every 1% of Ramp Rate	Real Units/Second for Every 1% of Ramp Rate
Percent of Full Scale			
-10…+10V	10000	100	0.2V/s
0…5V			0.05V/s
0…10V			0.1V/s
1…5V			0.04V/s

Ramping only takes place, if configured, when the output is being commanded to go to a fault state. Ramping is not done in normal run operation. The ramp rate values are entered in the Configuration Data file and are accepted as valid only if:

- The number of counts entered for a channel's ramp rate is greater than or equal to a minimum of 1% of the total number of full scale counts for the channel's selected data format (see Table 4.14 and Table 4.15 for minimum values).

  OR

- The number of counts entered for a channel's ramp rate may be equal to 0 if ramping is not enabled for the channel.

Hold for Initialization

Hold for Initialization causes outputs to hold present state until the value commanded by the controller matches the value held by the module providing a bumpless transfer.

If Hold for Initialization is selected, outputs hold if any of these three conditions occur:

- initial connection is established after power-up
- new connection is established after a communications fault occurs
- transition to Run Mode from Program state

The Output Held bit (see the Input Data file) for a channel indicates that the channel is holding.

Open Wire Detection (1769-OF8C Only)

This feature detects when current flow is not present on an output channel that is enabled and has a non-zero output value commanded.

When an open wire condition occurs channel, the diagnostic bit (D bit in Input Data file status words) is set for that channel.

1769-OF8C and -OF8V Fault Mode (FM)

This configuration selection provides individual fault mode selection for the analog channels. When this selection is disabled [the bit is reset (0)], the module *holds* the *last state*, meaning that the analog output remains at the last converted value prior to the condition that caused the control system to enter the program mode.

IMPORTANT Hold last state is the default condition for the 1769-OF8C and -OF8V during a control system run-to-program mode change.

TIP MicroLogix 1500™ does not support the analog output module's default hold last state function and resets analog outputs to zero when the system enters the program mode.

If this selection is enabled [the bit is set (1)] and the system enters the program mode, it commands the module to convert the *user-specified* value from the channel's Fault mode word to the appropriate analog output for the range selected.

TIP Not all controllers support this function. Refer to your controller's user manual for details.

1769-OF8C and -OF8V Program/Idle Mode (PM)

This configuration selection provides individual program/idle mode selection for the analog channels 0. When this selection is disabled [the bit is reset (0)], the module *holds* the *last state*, meaning that the analog output remains at the last converted value prior to the condition that caused the control system to enter the program mode.

IMPORTANT Hold last state is the default condition for the 1769-OF8C and -OF8V during a control system run-to-program mode change.

TIP MicroLogix 1500™ does not support the analog output module's default hold last state function and resets analog outputs to zero when the system enters the program mode.

If this selection is enabled [the bit is set (1)] and the system enters the program mode, it commands the module to convert the *user-specified* value from the channel's Program/Idle mode word to the appropriate analog output for the range selected.

TIP Not all controllers support this function. Refer to your controller's user manual for details.

1769-OF8C and -OF8V Program/Idle to Fault Enable (PFE)

If a system currently in program/idle mode faults, this setting determines whether the program/idle or fault value is applied to the output. If the selection is enabled [the bit is set (1)], the module applies the fault value. If the selection is disabled [the bit is reset (0)], the module applies the program/idle mode data value. The default setting is disabled.

TIP Not all controllers support this function. Refer to your controller's user manual for details.

1769-OF8C and -OF8V Fault Value

Using words each channel's Fault Value word, you can specify the values the outputs will assume when the system enters the fault mode. The default value is 0. Valid values are dependent upon the range selected in the range selection field. If the value you entered is outside the normal operating range for the output range selected, the module generates a configuration error.

For example, if you select engineering units for the 0 to 20 mA range and enter a fault value within the normal operating range (0 to 20000), the module will configure and operate correctly. However, if you enter a value outside the normal operating range (for example 21000), the module indicates a configuration error.

TIP Not all controllers support this function. Refer to your controller's user manual for details.

EXAMPLE

- If the default value, 0000, is used and the range selected is 0 to 20 mA, the module will output 0 mA for all data formats.
- If the raw/proportional or engineering units format is selected and zero is entered as Program/Idle mode word in the 4 to 20 mA range (for 1769-OF8C) or the 1 to 5V range (for 1769-OF8V), a configuration error results.
- See Table 4.17 1769-OF8C Valid Output Data Table on page 4-33 and Table 4.18 1769-OF8V Valid Output Data Table on page 4-34for more examples.

1769-OF8C and -OF8V Program/Idle Value

Use each channel's Program/Idle Mode word to set the integer values for the outputs to assume when the system enters the program mode. The values are dependent upon the range selected in the range selection field. If the value you entered is outside the normal operating range for the output range selected, the module generates a configuration error. The default value is 0.

For example, if you select engineering units for the 0 to 20 mA range and enter a program/idle value within the normal operating range (0 to 20000), the module will configure and operate correctly. However, if you enter a value outside the normal operating range (for example 21000), the module indicates a configuration error.

TIP Not all controllers support this function. Refer to your controller's user manual for details.

EXAMPLE

- If the default value, 0000, is used and the range selected is 0 to 20 mA, the module will output 0 mA for all data formats.
- If the raw/proportional or engineering units format is selected and zero is entered as Program/Idle mode word in the 4 to 20 mA range (for 1769-OF8C) or the 1 to 5V range (for 1769-OF8V), a configuration error results.
- See Table 4.17 1769-OF8C Valid Output Data Table on page 4-33 and Table 4.18 1769-OF8V Valid Output Data Table on page 4-34 for more examples.

1769-OF8C Valid Output Data Word Formats/Ranges

The following table shows the valid formats and data ranges accepted by the module.

Table 4.17 1769-OF8C Valid Output Data Table

OF8C Normal Operating Range	Input Value	Example Data		Output Range State	Raw/Proportional Data		Engineering Unit		Scaled-for-PID		Percent Full Range	
					Decimal Range		Decimal Range		Decimal Range		Decimal Range	
		Controller Ordered	OF8C Output		Controller Ordered	OF8C Output and Echo	Controller Ordered	OF8C Output and Echo	Controller Ordered	OF8C Output and Echo	Controller Ordered	OF8C Output and Echo
4 mA to 20 mA	Over 21.0 mA	+22.0 mA	+21.0 mA	Over	N/A	N/A	22000	21000	18431	17407	11250	10625
	21.0 mA	+21.0 mA	+21.0 mA	Over	32767	32767	21000	21000	17407	17407	10625	10625
	4.0 mA to 20.0 mA	+20.0 mA	+20.0 mA	Normal	29085	29085	20000	20000	16383	16383	10000	10000
		+4.0 mA	+4.0 mA	Normal	-29822	-29822	4000	4000	0	0	0	0
	3.2 mA	+3.2 mA	+3.2 mA	Under	-32767	-32767	3200	3200	-819	-819	-500	-500
	Under 3.2 mA	0.0 mA	+3.2 mA	Under	N/A	N/A	0	3200	-4096	-819	-2500	-500
0 mA to 20 mA	Over 21.0 mA	+22.0 mA	+21.0 mA	Over	N/A	N/A	22000	21000	18201	17202	11000	10500
	21.0 mA	21.0 mA	+21.0 mA	Over	32767	32767	21000	21000	17202	17202	10500	10500
	0.0 mA to 20.0 mA	20.0 mA	+20.0 mA	Normal	29646	29646	20000	20000	16383	16383	10000	10000
		0.0 mA	0.0 mA	Normal	-32767	-32767	0	0	0	0	0	0
	Under 0.0 mA	-1.0 mA	0.0 mA	Under	N/A	N/A	-1000	0	-819	0	-500	0

1769-OF8V Valid Output Data Word Formats/Ranges

The following table shows the valid formats and data ranges accepted by the module.

Table 4.18 1769-OF8V Valid Output Data Table

OF8V Normal Operating Output Range	Input Value	Example Data		Output Range State	Raw/Proportional Data		Engineering Unit		Scaled-for-PID		Percent Full Range	
					Decimal Range		Decimal Range		Decimal Range		Decimal Range	
		Controller Ordered	OF8C Output		Controller Ordered	OF8C Output and Echo	Controller Ordered	OF8C Output and Echo	Controller Ordered	OF8C Output and Echo	Controller Ordered	OF8C Output and Echo
±10V dc	Over 10.5V dc	+11.0V dc	+10.5V dc	Over	N/A	N/A	11000	10500	17202	16793	11000	10500
	+10.5V dc	+10.5V dc	+10.5V dc	Over	32767	32767	10500	10500	16793	16793	10500	10500
	-10V to +10V dc	+10.0V dc	+10.0V dc	Normal	31207	31207	10000	10000	16383	16383	10000	10000
		0.0V dc	0.0V dc	Normal	0	0	0	0	8192	8192	0	0
		-10.0V dc	-10.0V dc	Normal	-31207	-31207	-10000	-10000	0	0	-10000	-10000
	-10.5V dc	-10.5V dc	-10.5V dc	Under	-32767	-32767	-10500	-10500	-410	-410	-10500	-10500
	Under -0.5V dc	-11.0V dc	-11.0V dc	Under	N/A	N/A	-11000	-10500	-819	-410	-11000	-10500
0V to 5V dc	Over 5.25V dc	5.5V dc	+5.25V dc	Over	N/A	N/A	5500	5250	18021	17202	11000	10500
	5.25V dc	5.25V dc	+5.25V dc	Over	32767	32767	5250	5250	17202	17202	10500	10500
	0.0V dc to 5.0V dc	5.0V dc	+5.0V dc	Normal	29918	29918	5000	5000	16383	16383	10000	10000
		0.0V dc	0.0V dc	Normal	-27068	-27068	0	0	0	0	0	0
	-0.5V dc	-0.5V dc	-0.5V dc	Under	-32767	-32767	-500	-500	-1638	-1638	-1000	-1000
	Under -0.5V dc	-1.0V dc	-0.5V dc	Under	N/A	N/A	-1000	-500	-3277	-1638	-2000	-1000

Table 4.18 1769-OF8V Valid Output Data Table

OF8V Normal Operating Output Range	Input Value	Example Data		Output Range State	Raw/Proportional Data		Engineering Unit		Scaled-for-PID		Percent Full Range	
					Decimal Range		Decimal Range		Decimal Range		Decimal Range	
		Controller Ordered	OF8C Output		Controller Ordered	OF8C Output and Echo	Controller Ordered	OF8C Output and Echo	Controller Ordered	OF8C Output and Echo	Controller Ordered	OF8C Output and Echo
0V to 10V dc	Over 10.5V dc	11.0V dc	+10.5V dc	Over	N/A	N/A	11000	10500	18021	17202	11000	10500
	+10.5V dc	+10.5V dc	+10.5V dc	Over	32767	32767	10500	10500	17202	17202	10500	10500
	0.0V dc to 10.0V dc	+10.0V dc	+10.0V dc	Normal	29788	29788	10000	10000	16383	16383	10000	10000
		0.0V dc	0.0V dc	Normal	-29788	-29788	0	0	0	0	0	0
	-0.5V dc	-0.5V dc	-0.5V dc	Under	-32767	-32767	-500	-500	-819	-819	-500	-500
	Under -5.0V dc	-1.0V dc	-0.5V dc	Under	N/A	N/A	-1000	-500	-1638	-819	-1000	-500
1.0V to 5V dc	Over 5.25V dc	+5.5V dc	+5.25V dc	Over	N/A	N/A	5500	5250	18431	17407	11250	10625
	+5.25V dc	+5.25V dc	+5.25V dc	Over	32767	32767	5250	5250	17407	17407	10625	10625
	1.0V to 5.0V dc	+5.0V dc	+5.0V dc	Normal	29318	29318	5000	5000	16383	16383	10000	10000
		+1.0V dc	+1.0V dc	Normal	-25869	-25869	1000	1000	0	0	0	0
	0.5V dc	+0.5V dc	+0.5V dc	Under	-32767	-32767	500	500	-2048	-2048	-1250	-1250
	Under 0.5V dc	0.0V dc	0.0V dc	Under	N/A	N/A	0	500	-4096	-2048	-2500	-1250

Notes:

Module Diagnostics and Troubleshooting

This chapter describes troubleshooting the analog input and output modules. This chapter contains information on:

- safety considerations when troubleshooting
- module vs. channel operation
- the module's diagnostic features
- critical vs. non-critical errors
- module condition data

Safety Considerations

Safety considerations are an important element of proper troubleshooting procedures. Actively thinking about the safety of yourself and others, as well as the condition of your equipment, is of primary importance.

The following sections describe several safety concerns you should be aware of when troubleshooting your control system.

ATTENTION

Never reach into a machine to actuate a switch because unexpected motion can occur and cause injury.

Remove all electrical power at the main power disconnect switches before checking electrical connections or inputs/outputs causing machine motion.

Indicator Lights

When the green LED on the analog module is illuminated, it indicates that power is applied to the module.

Activating Devices When Troubleshooting

When troubleshooting, never reach into the machine to actuate a device. Unexpected machine motion could occur.

Stand Clear of the Machine

When troubleshooting any system problem, have all personnel remain clear of the machine. The problem could be intermittent, and sudden unexpected machine motion could occur. Have someone ready to operate an emergency stop switch in case it becomes necessary to shut off power to the machine.

Program Alteration

There are several possible causes of alteration to the user program, including extreme environmental conditions, Electromagnetic Interference (EMI), improper grounding, improper wiring connections, and unauthorized tampering. If you suspect a program has been altered, check it against a previously saved program on an EEPROM or UVPROM memory module.

Safety Circuits

Circuits installed on the machine for safety reasons, like over-travel limit switches, stop push buttons, and interlocks, should always be hard-wired to the master control relay. These devices must be wired in series so that when any one device opens, the master control relay is de-energized, thereby removing power to the machine. Never alter these circuits to defeat their function. Serious injury or machine damage could result.

Module Operation vs. Channel Operation

The module performs operations at two levels:

- module level
- channel level

Module-level operations include functions such as power-up, configuration, and communication with a bus master, such as a MicroLogix 1500 controller.

Channel-level operations describe channel related functions, such as data conversion and over- or under-range detection.

Internal diagnostics are performed at both levels of operation. When detected, module error conditions are immediately indicated by the module status LED. Both module hardware and channel configuration error conditions are reported to the controller. Channel over-range or under-range conditions are reported in the module's input data table. Module hardware errors are typically reported in the controller's I/O status file. Refer to your controller manual for details.

Power-up Diagnostics

At module power-up, a series of internal diagnostic tests are performed. These diagnostic tests must be successfully completed or the module status LED remains off and a module error results and is reported to the controller.

Table 5.1 Diagnostics

If module status LED is:	Indicated condition:	Corrective action:
On	Proper Operation	No action required.
Off	Module Fault	Cycle power. If condition persists, replace the module. Call your local distributor or Rockwell Automation for assistance.
Blinking[1]	Isolated 24V Power Not Present	Check external power switch setting. Check wiring to external power supply terminals. Check external power supply.

(1) 1769-OF8V and -OF8C only.

Channel Diagnostics

When an input or output module channel is enabled, the module performs a diagnostic check to see that the channel has been properly configured. In addition, the module checks each channel on every scan for configuration errors, over-range and under-range, open-circuit (input module in 4 to 20 mA range only) and output wire broken/high load resistance (output module only) conditions.

Out-of-Range Detection (Input and Output Modules)

For input modules, whenever the data received at the channel word is out of the defined operating range, an over-range or under-range error is indicated in the Input Data file.

For output modules, whenever the controller is driving data over or under the defined operating range, an over-range or under-range error is indicated in the Input Data file.

Open-Circuit Detection (Input Modules Only)

The module performs an open-circuit test on all enabled channels configured for 4 to 20 mA inputs. Whenever an open-circuit condition occurs, the under-range bit for that channel is set in the Input Data file.

Possible causes of an open circuit include:

- the sensing device may be broken
- a wire may be loose or cut
- the sensing device may not be installed on the configured channel

Output Wire Broken/High Load Resistance (Output Modules Only)

A check is performed on all enabled channels to determine if an output wire is broken, or if the load resistance is high, in the case of current mode outputs. Whenever one of these conditions is present, the diagnostic bit for that channel is set in the Input Data file.

Non-critical vs. Critical Module Errors

Non-critical module errors are typically recoverable. Channel errors (over-range or under-range errors) are non-critical. Non-critical error conditions are indicated in the module input data table. Non-critical configuration errors are indicated by the extended error code. See Table 5.4 1769-IF4 and -OF2 Extended Error Codes on page 5-6.

Critical module errors are conditions that prevent normal or recoverable operation of the system. When these types of errors occur, the system typically leaves the run or program mode of operation until the error can be dealt with. Critical module errors are indicated in Table 5.4 1769-IF4 and -OF2 Extended Error Codes on page 5-6.

Module Error Definition Table

Analog module errors are expressed in two fields as four-digit Hex format with the most significant digit as “don’t care” and irrelevant. The two fields are “Module Error” and “Extended Error Information”. The structure of the module error data is shown below.

Table 5.2 Module Error Table

“Don’t Care” Bits				Module Error			Extended Error Information								
15	**14**	**13**	**12**	**11**	**10**	**9**	**8**	**7**	**6**	**5**	**4**	**3**	**2**	**1**	**0**
0	0	0	0	0	0	0	0	0	0	0	0	0	0	0	0
Hex Digit 4				**Hex Digit 3**			**Hex Digit 2**					**Hex Digit 1**			

Module Error Field

The purpose of the module error field is to classify module errors into three distinct groups, as described in the table below. The type of error determines what kind of information exists in the extended error information field. These types of module errors are typically reported in the controller's I/O status file. Refer to your controller manual for details.

Table 5.3 Module Error Types

Error Type	Module Error Field Value Bits 11 through 09 (Bin)	Description
No Errors	000	No error is present. The extended error field holds no additional information.
Hardware Errors	001	General and specific hardware error codes are specified in the extended error information field.
Configuration Errors	010	Module-specific error codes are indicated in the extended error field. These error codes correspond to options that you can change directly. For example, the input range or input filter selection.

Extended Error Information Field

Check the extended error information field when a non-zero value is present in the module error field. Depending upon the value in the module error field, the extended error information field can contain error codes that are module-specific or common to all 1769 analog modules.

TIP If no errors are present in the module error field, the extended error information field will be set to zero.

Hardware Errors

General or module-specific hardware errors are indicated by module error code 2. See Table 5.4 1769-IF4 and -OF2 Extended Error Codes on page 5-6, Table 5.5 1769-IF8 Extended Error Codes on page 5-7, and Table 5.6 1769-OF8C and -OF8V Extended Error Codes on page 5-10.

Configuration Errors

If you set the fields in the configuration file to invalid or unsupported values, the module ignores the invalid configuration, generates a non-critical error, and keeps operating with the previous configuration.

Each type of analog module has different features and different error codes. See Table 5.4 1769-IF4 and -OF2 Extended Error Codes on page 5-6, Table 5.5 1769-IF8 Extended Error Codes on page 5-7, and Table 5.6 1769-OF8C and -OF8V Extended Error Codes on page 5-10.

Error Codes

Error codes can help troubleshoot your module.

Table 5.4 1769-IF4 and -OF2 Extended Error Codes

Error Type	Hex Equivalent[1]	Module Error Code	Extended Error Information Code	Error Description
		Binary	Binary	
No Error	X000	000	0 0000 0000	No Error
General Common Hardware Error	X200	001	0 0000 0000	General hardware error; no additional information
	X201	001	0 0000 0001	Power-up reset state
Hardware-Specific Error	X300	001	0 1000 0000	General hardware error, loss of external 24V dc power
	X301	001	0 1000 0001	Microprocessor hardware error
1769-IF4 Specific Configuration Error	X400	010	0 0000 0000	General configuration error; no additional information
	X401	010	0 0000 0001	invalid input range selected (channel 0)
	X402	010	0 0000 0010	invalid input range selected (channel 1)
	X403	010	0 0000 0011	invalid input range selected (channel 2)
	X404	010	0 0000 0100	invalid input range selected (channel 3)
	X405	010	0 0000 0101	invalid input filter selected (channel 0)
	X406	010	0 0000 0110	invalid input filter selected (channel 1)
	X407	010	0 0000 0111	invalid input filter selected (channel 2)
	X408	010	0 0000 1000	invalid input filter selected (channel 3)
	X409	010	0 0000 1001	invalid input format selected (channel 0)
	X40A	010	0 0000 1010	invalid input format selected (channel 1)
	X40B	010	0 0000 1011	invalid input format selected (channel 2)
	X40C	010	0 0000 1100	invalid input format selected (channel 3)

Table 5.4 1769-IF4 and -OF2 Extended Error Codes

Error Type	Hex Equivalent[1]	Module Error Code	Extended Error Information Code	Error Description
		Binary	Binary	
1769-OF2 Specific Configuration Error	X400	010	0 0000 0000	General configuration error; no additional information
	X401	010	0 0000 0001	invalid output range selected (channel 0)
	X402	010	0 0000 0010	invalid output range selected (channel 1)
	X403	010	0 0000 0011	invalid output data format selected (channel 0)
	X404	010	0 0000 0100	invalid output data format selected (channel 1)
	X405	010	0 0000 0101	invalid fault value entered for data format selected (channel 0)
	X406	010	0 0000 0110	invalid fault value entered for data format selected (channel 1)
	X407	010	0 0000 0111	invalid program value entered for data format selected (channel 0)
	X408	010	0 0000 1000	invalid program value entered for data format selected (channel 1)

(1) X represents the “Don’t Care” digit.

Table 5.5 1769-IF8 Extended Error Codes

Error Type	Hex Equivalent[1]	Module Error Code	Extended Error Information Code	Error Description
		Binary	Binary	
No Error	X000	000	0 0000 0000	No Error
General Common Hardware Error	X200	001	0 0000 0000	General hardware error; no additional information
	X201	001	0 0000 0001	Power-up reset state
Hardware-Specific Error	X300	001	0 1000 0000	General hardware error, loss of external 24V dc power
	X301	001	0 1000 0001	Microprocessor hardware error
	X302	001	1 0000 0010	A/D converter communication error

Table 5.5 1769-IF8 Extended Error Codes

Error Type	Hex Equivalent[1]	Module Error Code	Extended Error Information Code	Error Description
		Binary	Binary	
1769-IF8 Specific Configuration Error	X400	010	0 0000 0000	General configuration error; no additional information
	X401	010	0 0000 0001	invalid input range selected (channel 0)
	X402	010	0 0000 0010	invalid input range selected (channel 1)
	X403	010	0 0000 0011	invalid input range selected (channel 2)
	X404	010	0 0000 0100	invalid input range selected (channel 3)
	X405	010	0 0000 0101	invalid input range selected (channel 4)
	X406	010	0 0000 0110	invalid input range selected (channel 5)
	X407	010	0 0000 0111	invalid input range selected (channel 6)
	X408	010	0 0000 1000	invalid input range selected (channel 7)
	X409	010	0 0000 1001	invalid input filter selected (channel 0)
	X40A	010	0 0000 1010	invalid input filter selected (channel 1)
	X40B	010	0 0000 1011	invalid input filter selected (channel 2)
	X40C	010	0 0000 1100	invalid input filter selected (channel 3)
	X40D	010	0 0000 1101	invalid input filter selected (channel 4)
	X40E	010	0 0000 1110	invalid input filter selected (channel 5)
	X40F	010	0 0000 1111	invalid input filter selected (channel 6)
	X410	010	0 0001 0000	invalid input filter selected (channel 7)
	X411	010	0 0001 0001	invalid input format selected (channel 0)
	X412	010	0 0001 0010	invalid input format selected (channel 1)
	X413	010	0 0001 0011	invalid input format selected (channel 2)
	X414	010	0 0001 0100	invalid input format selected (channel 3)
	X415	010	0 0001 0101	invalid input format selected (channel 4)
	X416	010	0 0001 0110	invalid input format selected (channel 5)
	X417	010	0 0001 0111	invalid input format selected (channel 6)
	X418	010	0 0001 1000	invalid input format selected (channel 7)
	X419	010	0 0001 1001	alarm not enabled (channel 0)
	X41A	010	0 0001 1010	alarm not enabled (channel 1)

Table 5.5 1769-IF8 Extended Error Codes

Error Type	Hex Equivalent[1]	Module Error Code	Extended Error Information Code	Error Description
		Binary	Binary	
1769-IF8 Specific Configuration Error	X41B	010	0 0001 1011	alarm not enabled (channel 2)
	X41C	010	0 0001 1100	alarm not enabled (channel 3)
	X41D	010	0 0001 1101	alarm not enabled (channel 4)
	X41E	010	0 0001 1110	alarm not enabled (channel 5)
	X41F	010	0 0001 1111	alarm not enabled (channel 6)
	X420	010	0 0010 0000	alarm not enabled (channel 7)
	X421	010	0 0010 0001	invalid alarm data selected (channel 0)
	X422	010	0 0010 0010	invalid alarm data selected (channel 1)
	X423	010	0 0010 0011	invalid alarm data selected (channel 2)
	X424	010	0 0010 0100	invalid alarm data selected (channel 3)
	X425	010	0 0010 0101	invalid alarm data selected (channel 4)
	X426	010	0 0010 0110	invalid alarm data selected (channel 5)
	X427	010	0 0010 0111	invalid alarm data selected (channel 6)
	X428	010	0 0010 1000	invalid alarm data selected (channel 7)
	X429	010	0 0010 1001	invalid real time sample rate value

(1) X represents the “Don’t Care” digit.

Table 5.6 1769-OF8C and -OF8V Extended Error Codes

Error Type	Hex Equivalent[1]	Module Error Code	Extended Error Information Code	Error Description
		Binary	Binary	
No Error	X000	000	0 0000 0000	No Error
General Common Hardware Error	X200	001	0 0000 0000	General hardware error; no additional information
	X201	001	0 0000 0001	Power-up reset state
	X216	001	0 0001 0110	Microprocessor watchdog error
	X220	001	0 0010 0000	Firmware corrupt (checksum failure)
	X221	001	0 0010 0001	Firmware checksum error in NVRAM (calibration data checksum failure)
Hardware-Specific Error	X300	001	1 0000 0000	General hardware error (ASIC)
1769-OF8C and -OF8V Specific Configuration Error	X401	010	0 0000 0001	invalid input range selected (channel 0)
	X402	010	0 0000 0010	invalid input range selected (channel 1)
	X403	010	0 0000 0011	invalid input range selected (channel 2)
	X404	010	0 0000 0100	invalid input range selected (channel 3)
	X405	010	0 0000 0101	invalid input range selected (channel 4)
	X406	010	0 0000 0110	invalid input range selected (channel 5)
	X407	010	0 0000 0111	invalid input range selected (channel 6)
	X408	010	0 0000 1000	invalid input range selected (channel 7)
	X409	010	0 0000 1001	invalid data format selected (channel 0)
	X40A	010	0 0000 1010	invalid data format selected (channel 1)
	X40B	010	0 0000 1011	invalid data format selected (channel 2)
	X40C	010	0 0000 1100	invalid data format selected (channel 3)
	X40D	010	0 0000 1101	invalid data format selected (channel 4)
	X40E	010	0 0000 1110	invalid data format selected (channel 5)
	X40F	010	0 0000 1111	invalid data format selected (channel 6)
	X410	010	0 0001 0000	invalid data format selected (channel 7)
	X411	010	0 0001 0001	invalid fault value (channel 0)
	X412	010	0 0001 0010	invalid fault value (channel 1)
	X413	010	0 0001 0011	invalid fault value (channel 2)
	X414	010	0 0001 0100	invalid fault value (channel 3)
	X415	010	0 0001 0101	invalid fault value (channel 4)
	X416	010	0 0001 0110	invalid fault value (channel 5)
	X417	010	0 0001 0111	invalid fault value (channel 6)
	X418	010	0 0001 1000	invalid fault value (channel 7)
	X419	010	0 0001 1001	invalid idle value (channel 0)

Table 5.6 1769-OF8C and -OF8V Extended Error Codes

Error Type	Hex Equivalent[1]	Module Error Code	Extended Error Information Code	Error Description
		Binary	Binary	
1769-OF8C and -OF8V Specific Configuration Error	X41A	010	0 0001 1010	invalid idle value (channel 1)
	X41B	010	0 0001 1011	invalid idle value (channel 2)
	X41C	010	0 0001 1100	invalid idle value (channel 3)
	X41D	010	0 0001 1011	invalid idle value (channel 4)
	X41E	010	0 0001 1100	invalid idle value (channel 5)
	X41F	010	0 0001 1101	invalid idle value (channel 6)
	X420	010	0 0010 0000	invalid idle value (channel 7)
	X421	010	0 0010 0001	invalid clamps (channel 0)
	X422	010	0 0010 0010	invalid clamps (channel 1)
	X423	010	0 0010 0011	invalid clamps (channel 2)
	X424	010	0 0010 0100	invalid clamps (channel 3)
	X425	010	0 0010 0101	invalid clamps (channel 4)
	X426	010	0 0010 0110	invalid clamps (channel 5)
	X427	010	0 0010 0111	invalid clamps (channel 6)
	X428	010	0 0010 1000	invalid clamps (channel 7)
	X429	010	0 0010 1001	invalid ramp rate (channel 0)
	X42A	010	0 0010 1010	invalid ramp rate (channel 1)
	X42B	010	0 0010 1011	invalid ramp rate (channel 2)
	X42C	010	0 0010 1100	invalid ramp rate (channel 3)
	X42D	010	0 0010 1101	invalid ramp rate (channel 4)
	X42E	010	0 0010 1110	invalid ramp rate (channel 5)
	X42F	010	0 0010 1111	invalid ramp rate (channel 6)
	X430	010	0 0011 0000	invalid ramp rate (channel 7)
	X431	010	0 0011 0001	configuration word 0 illegal bits set (channel 0)
	X432	010	0 0011 0010	configuration word 0 illegal bits set (channel 1)
	X433	010	0 0011 0011	configuration word 0 illegal bits set (channel 2)
	X434	010	0 0011 0100	configuration word 0 illegal bits set (channel 3)
	X435	010	0 0011 0101	configuration word 0 illegal bits set (channel 4)
	X436	010	0 0011 0110	configuration word 0 illegal bits set (channel 5)
	X437	010	0 0011 1011	configuration word 0 illegal bits set (channel 6)
	X438	010	0 0011 1000	configuration word 0 illegal bits set (channel 7)
	X439	010	0 0011 1001	configuration word 1 illegal bits set (channel 0)
	X43A	010	0 0011 1010	configuration word 1 illegal bits set (channel 1)

Table 5.6 1769-OF8C and -OF8V Extended Error Codes

Error Type	Hex Equivalent[1]	Module Error Code	Extended Error Information Code	Error Description
		Binary	Binary	
1769-OF8C and -OF8V Specific Configuration Error	X43B	010	0 0011 1011	configuration word 1 illegal bits set (channel 2)
	X43C	010	0 0011 1100	configuration word 1 illegal bits set (channel 3)
	X43D	010	0 0011 1101	configuration word 1 illegal bits set (channel 4)
	X43E	010	0 0011 1110	configuration word 1 illegal bits set (channel 5)
	X43F	010	0 0011 1111	configuration word 1 illegal bits set (channel 6)
	X440	010	0 0100 0000	configuration word 1 illegal bits set (channel 7)

(1) X represents the "Don't Care" digit.

Module Inhibit Function

CompactLogix controllers support the module inhibit function. See your controller manual for details.

Whenever the output modules are inhibited, the modules enter the program mode and the output channel is changed to the state configured for the program mode. Whenever the input modules are inhibited, the modules continue to provide information about changes at its inputs to the 1769 Compact Bus Master (for example, a CompactLogix controller).

Contacting Rockwell Automation

If you need to contact Rockwell Automation for assistance, please have the following information available when you call:

- a clear statement of the problem, including a description of what the system is actually doing. Note the LED state; also note input and output image words for the module.
- a list of remedies you have already tried
- processor type and firmware number (See the label on the processor.)
- hardware types in the system, including all I/O modules
- fault code if the processor is faulted

Specifications

General Specifications for 1769-IF4, -IF8, -OF2, -OF8C, and -OF8V Modules

Table A.1 General Specifications

Specification	Value
Dimensions	118 mm (height) x 87 mm (depth) x 35 mm (width) [52.5 mm (width) for 1769-IF8] Height including mounting tabs is 138 mm 4.65 in (height) x 3.43 in (depth) x 1.38 in (width) [2.07 in (width) for 1769-IF8] Height including mounting tabs is 5.43 in
Approximate Shipping Weight (with carton)	300g (0.65 lbs.) 1769-IF8 - 450g (0.99 lbs.)
Storage Temperature	-40°C to +85°C (-40°F to +185°F)
Operating Temperature	0°C to +60°C (32°F to +140°F)
Operating Humidity	5% to 95% non-condensing
Operating Altitude	2000 meters (6561 feet)
Vibration	Operating: 10 to 500 Hz, 5G, 0.030 in. peak-to-peak Relay Operation: 2G
Shock	Operating: 30G, 11 ms panel mounted (20G, 11 ms DIN rail mounted) Relay Operation: 7.5G panel mounted (5G DIN rail mounted) Non-Operating: 40G panel mounted (30G DIN rail mounted)
System Power Supply Distance Rating	8 (The module may not be more than 8 modules away from a system power supply.)
Optional 24V dc Class 2 Power Supply Voltage Range (1)	20.4 V to 26.4V dc
Recommended Cable	Belden™ 8761 (shielded)
Maximum Cable Length	1769-IF4 and -IF8: See "Effect of Transducer/Sensor and Cable Length Impedance on Voltage Input Accuracy" on page 2-12 1769-OF2, -OF8C, and -OF8V: See "Effect of Device and Cable Output Impedance on Output Module Accuracy" on page 2-13
Agency Certification	• C-UL certified (under CSA C22.2 No. 142) • UL 508 listed • CE compliant for all applicable directives
Hazardous Environment Class	Class I, Division 2, Hazardous Location, Groups A, B, C, D (UL 1604, C-UL under CSA C22.2 No. 213)
Radiated and Conducted Emissions	EN50081-2 Class A

Specification	Value
Electrical /EMC:	*The module has passed testing at the following levels:*
• ESD Immunity (IEC1000-4-2)	• 4 kV contact, 8 kV air, 4 kV indirect
• Radiated Immunity (IEC1000-4-3)	• 10 V/m , 80 to 1000 MHz, 80% amplitude modulation, +900 MHz keyed carrier
• Fast Transient Burst (IEC1000-4-4)	• 2 kV, 5kHz
• Surge Immunity (IEC1000-4-5)	• 1kV galvanic gun
• Conducted Immunity (IEC1000-4-6)	• 10V, 0.15 to 80MHz[(2)]

(1) Failure to use a Class 2 power supply without regulation within these limits could result in improper module operation.

(2) Conducted Immunity frequency range may be 150 kHz to 30 MHz if the Radiated Immunity frequency range is 30 MHz to 1000 MHz.

1769-IF4 Input Specifications

Table A.2 1769-IF4 Specifications

Specification	1769-IF4 (Series B and later)
Analog Normal Operating Ranges	Voltage: ± 10V dc, 0 to 10V dc, 0 to 5V dc, 1 to 5V dc Current: 0 to 20 mA, 4 to 20 mA
Full Scale(1) Analog Ranges	Voltage: ± 10.5V dc, -0.5 to 10.5V dc, -0.5 to 5.25V dc, 0.5 to 5.25V dc Current: 0 to 21 mA, 3.2 to 21 mA
Number of Inputs	4 differential or single-ended
Bus Current Draw (max.)	120 mA at 5V dc 60 mA at 24V dc(7)
Heat Dissipation	2.63 Total Watts (The Watts per point, plus the minimum Watts, with all points energized.)
Converter Type	Delta Sigma
Response Speed per Channel	Input filter and configuration dependent. See “Channel Step Response” on page 3-6.
Resolution (max.)	14 bits (unipolar) 14 bits plus sign (bipolar) See “Effective Resolution” on page 3-13.
Rated Working Voltage(2)	30V ac/30V dc
Common Mode Voltage Range(3)	±10V maximum per channel
Common Mode Rejection	greater than 60 dB at 50 and 60 Hz with the 50 or 60 Hz filter selected, respectively
Normal Mode Rejection Ratio	-50 dB at 50/60 Hz with the 50 or 60 Hz filter selected, respectively
Input Impedance	Voltage Terminal: 220K Ω (typical) Current Terminal: 250 Ω
Overall Accuracy(4)	Voltage Terminal: ±0.2% full scale at 25°C Current Terminal: ±0.35% full scale at 25°C
Accuracy Drift with Temperature	Voltage Terminal: ±0.003% per °C Current Terminal: ±0.0045% per °C
Calibration	The module performs autocalibration on channel enable and on configuration change between channels.
Non-linearity (in percent full scale)	±0.03%
Repeatability(5)	±0.03%
Module Error over Full Temperature Range (0 to +60°C [+32°F to +140°F])	Voltage: ±0.3% Current: ±0.5%

Specification	1769-IF4 (Series B and later)
Input Channel Configuration	via configuration software screen or the user program (by writing a unique bit pattern into the module's configuration file). Refer to your controller manual to determine if user program configuration is supported.
Module OK LED	On: module has power, has passed internal diagnostics, and is communicating over the bus. Off: Any of the above is not true.
Channel Diagnostics	Over or under range by bit reporting
Maximum Overload at Input Terminals(6)	Voltage Terminal: ±30V continuous, 0.1 mA Current Terminal: ±32 mA continuous, ±7.6 V
Input Group to Backplane Isolation	500V ac or 710V dc for 1 minute (qualification test) 30V ac/30V dc working voltage (IEC Class 2 reinforced insulation)
Vendor I.D. Code	1
Product Type Code	10
Product Code	35

(1) The over- or under-range flag will come on when the normal operating range (over/under) is exceeded. The module will continue to convert the analog input up to the maximum full scale range. The flag automatically resets when within the normal operating range.

(2) Rated working voltage is the maximum continuous voltage that can be applied at the input terminal, including the input signal and the value that floats above ground potential (for example, 10V dc input signal and 20V dc potential above ground).

(3) For proper operation, both the plus and minus input terminals must be within ±10V dc of analog common.

(4) Includes offset, gain, non-linearity and repeatability error terms.

(5) Repeatability is the ability of the input module to register the same reading in successive measurements for the same input signal.

(6) Damage to the input circuit may occur if this value is exceeded.

(7) If the optional 24V dc Class 2 power supply is used, the 24V dc current draw from the bus is 0 mA.

1769-IF8 Input Specifications

Table A.3 1769-IF8 Specifications

Specification	1769-IF8
Analog Normal Operating Ranges[1]	Voltage: ± 10V dc, 0 to 10V dc, 0 to 5V dc, 1 to 5V dc Current: 0 to 20 mA, 4 to 20 mA
Full Scale Analog Ranges[1]	Voltage: ± 10.5V dc, 0 to 10.5V dc, 0 to 5.25V dc, 0.5 to 5.25V dc Current: 0 to 21 mA, 3.2 to 21 mA
Number of Inputs	8 differential or single-ended
Bus Current Draw (max.)	120 mA at 5V dc 70 mA at 24V dc
Heat Dissipation	3.24 Total Watts (The Watts per point, plus the minimum Watts, with all points energized.)
Converter Type	Delta Sigma
Response Speed per Channel	Input filter and configuration dependent. See your user's manual.
Resolution (max.)[2]	16 bits (unipolar) 15 bits plus sign (bipolar)
Rated Working Voltage[3]	30V ac/30V dc
Common Mode Voltage Range[4]	±10V dc maximum per channel
Common Mode Rejection	greater than 60 dB at 50 and 60 Hz with the 10 Hz filter selected, respectively.
Normal Mode Rejection Ratio	-50 dB at 50 and 60 Hz with the 10 Hz filter selected, respectively.
Input Impedance	Voltage Terminal: 220K Ω (typical) Current Terminal: 250 Ω
Overall Accuracy[5]	Voltage Terminal: ±0.2% full scale at 25°C Current Terminal: ±0.35% full scale at 25°C

(1) The over- or under-range flag will come on when the normal operating range (over/under) is exceeded. The module will continue to convert the analog input up to the maximum full scale range. The flag automatically resets when within the normal operating range.

(2) Resolution is dependent upon your filter selection. The maximum resolution is achieved with the 10 Hz filter selected. For resolution with other filter selections, refer to the user manual, publication 1769-UM002.

(3) Rated working voltage is the maximum continuous voltage that can be applied at the input terminal, including the input signal and the value that floats above ground potential (for example, 10V dc input signal and 20V dc potential above ground).

(4) For proper operation, both the plus and minus input terminals must be within ±10V dc of analog common.

(5) Includes offset, gain, non-linearity and repeatability error terms.

Specification	1769-IF8
Accuracy Drift with Temperature	Voltage Terminal: ±0.003% per °C Current Terminal: ±0.0045% per °C
Calibration	The module performs autocalibration on channel enable and on a configuration change between channels.
Non-linearity (in percent full scale)	±0.03%
Repeatability[1]	±0.03%
Module Error over Full Temperature Range (0 to +60°C [+32°F to +140°F])	Voltage: ±0.3% Current: ±0.5%
Input Channel Configuration	via configuration software screen or the user program (by writing a unique bit pattern into the module's configuration file). Refer to your controller's user manual to determine if user program configuration is supported.
Module OK LED	On: module has power, has passed internal diagnostics, and is communicating over the bus. Off: Any of the above is not true.
Channel Diagnostics	Over- or under-range by bit reporting, process alarms
Maximum Overload at Input Terminals[2]	Voltage Terminal: ±30V dc continuous, 0.1 mA Current Terminal: ±32 mA continuous, ±7.6 V dc
System Power Supply Distance Rating	8 (The module may not be more than 8 modules away from the system power supply.)
Recommended Cable	Belden™ 8761 (shielded)
Input Group to Bus Isolation	500V ac or 710V dc for 1 minute (qualification test) 30V ac/30V dc working voltage (IEC Class 2 reinforced insulation)
Vendor I.D. Code	1
Product Type Code	10
Product Code	38

(1) Repeatability is the ability of the input module to register the same reading in successive measurements for the same input signal.

(2) Damage may occur to the input circuit if this value is exceeded.

1769-OF2 Output Specifications

Table A.4 1769-OF2 Specifications

Specification	1769-OF2 (Series B and later)
Analog Ranges[1]	Voltage: ±10V dc, 0 to 10V dc, 0 to 5V dc, 1 to 5V dc Current: 0 to 20 mA, 4 to 20 mA
Full Scale Analog Ranges	Voltage: ±10.5V dc, -0.5 to 10.5V dc, -0.5 to 5.25V dc, 0.5 to 5.25V dc Current: 0 - 21 mA, 3.2 - 21 mA
Number of Outputs	2 single-ended
Bus Current Draw (max.)	120 mA at 5V dc 120 mA at 24V dc[7]
Heat Dissipation	2.52 Total Watts *(The Watts per point, plus the minimum Watts, with all points energized.)*
Converter Type	Sigma-Delta
Analog Data Format	14-bit, two's complement. The Most Significant Bit is the sign bit.
Digital Resolution Across Full Range	14 bits (unipolar) 14 bits plus sign (bipolar) See "1769-OF2 Module Resolution" on page 4-15.
Conversion Rate (all channels) max.	2.5 ms
Step Response to 63%[2]	2.9 ms
Current Load on Voltage Output	10 mA max.
Resistive Load on Current Output	0 to 500 Ω (includes wire resistance)
Load Range on Voltage Output	>1 kΩ at 10V dc
Max. Inductive Load (Current Outputs)	0.1 mH
Max. Capacitive Load (Voltage Outputs)	1 µF
Overall Accuracy[3]	Voltage Terminal: ±0.5% full scale at 25°C Current Terminal: ±0.35% full scale at 25°C
Accuracy Drift with Temperature	Voltage Terminal: ±0.0086% FS per °C Current Terminal: ±0.0058% FS per °C
Output Ripple;[4] range 0 - 50 kHz (referred to output range)	±0.05%
Calibration	None required (guaranteed by hardware design).
Non-linearity (in percent full scale)	±0.05%
Repeatability[5] (in percent full scale)	±0.05%

Specification	1769-OF2 (Series B and later)
Output Error Over Full Temperature Range (0 to 60°C [32 to +140°F])	Voltage: ±0.8% Current: ±0.55%
Output Offset Error (0 to 60°C [32 to +140°F])	±0.05%
Output Impedance	15 Ω (typical)
Open and Short-Circuit Protection	Yes
Maximum Short-Circuit Current	21 mA
Output Overvoltage Protection	Yes
Time to Detect Open Wire Condition (Current Mode)	10 ms typical 13.5 ms maximum
Output Response at Power Up and Power Down	±0.5 V spike for <5 ms
Rated Working Voltage(6)	30V ac/30V dc
Module OK LED	On: module has power, has passed internal diagnostics, and is communicating over the bus. Off: Any of the above is not true.
Channel Diagnostics	Over or under range by bit reporting output wire broken or load resistance high by bit reporting (current mode only)
Output Group to Backplane Isolation	500V ac or 710V dc for 1 minute (qualification test) 30V ac/30V dc working voltage (IEC Class 2 reinforced insulation)
Vendor I.D. Code	1
Product Type Code	10
Product Code	32

(1) The over- or under-range flag will come on when the normal operating range (over/under) is exceeded. The module will continue to convert the analog input up to the maximum full scale range. The flag automatically resets when within the normal operating range.

(2) Step response is the period of time between when the D/A converter was instructed to go from minimum to full range until the device is at 63% of full range. Time applies to one or both channels.

(3) Includes offset, gain, non-linearity and repeatability error terms.

(4) Output ripple is the amount a fixed output varies with time, assuming a constant load and temperature.

(5) Repeatability is the ability of the output module to reproduce output readings when the same controller value is applied to it consecutively, under the same conditions and in the same direction.

(6) Rated working voltage is the maximum continuous voltage that can be applied at the input terminal, including the input signal and the value that floats above ground potential (for example, 10V dc input signal and 20V dc potential above ground).

(7) If the optional 24V dc Class 2 power supply is used, the 24V dc current draw from the bus is 0 mA.

1769-OF8C Output Specifications

Table A.5 1769-OF8C Specifications

Specification	1769-OF8C
Analog Normal Operating Ranges[1]	0 to 20 mA, 4 to 20 mA
Full Scale Analog Ranges[1]	0 to 21 mA, 3.2 to 21 mA
Number of Outputs	8 single-ended
Bus Current Draw (max.)	145 mA at 5V dc 160 mA at 24V dc[2]
Heat Dissipation	2.69 Total Watts *(All points - 21 mA into 250Ω - worst case calculated.)*
Digital Resolution Across Full Range	16 bits (unipolar) +4 to +20 mA: 15.59 bits, 0.323 µA/bit 0 to +20 mA: 15.91 bits, 0.323 µA/bit
Conversion Rate (all channels) max.	5 ms
Step Response to 63%[3]	<2.9 ms
Resistive Load on Current Output	0 to 500 Ω (includes wire resistance)
Max. Inductive Load	0.1 mH
Field Calibration	None required
Overall Accuracy[4]	±0.35% full scale at 25°C

(1) The over- or under-range flag will come on when the normal operating range (over/under) is exceeded. The module will continue to convert the analog input up to the maximum full scale range. The flag automatically resets when within the normal operating range unless configured to latch.

(2) If the optional 24V dc Class 2 power supply is used, the 24V dc current draw from the bus is 0 mA.

(3) Step response is the period of time between when the D/A converter was instructed to go from minimum to full range until the device is at 63% of full range.

(4) Includes offset, gain, drift, non-linearity and repeatability error terms.

Specification	1769-OF8C
Accuracy Drift with Temperature	±0.0058% FS per °C
Output Ripple[1] range 0 to 50 kHz (referred to output range)	±0.05%
Non-linearity (in percent full scale)	±0.05%
Repeatability[2] (in percent full scale)	±0.05%
Output Error Over Full Temperature Range (0 to 60°C [+32 to +140°F])	Current: ±0.55%
Output Offset Error (0 to 60°C [+32 to +140°F])	±0.05%
Output Impedance	>1 MΩ
Open and Short-Circuit Protection	Yes
Maximum Short-Circuit Current	21 mA
Output Overvoltage Protection	Yes
Time to Detect Open Wire Condition	5 ms
Output Response at System Power Up and Power Down	± 0.5V dc spike for < 5 ms
Rated Working Voltage[3]	30V ac/30V dc
Output Group to Bus Isolation	500V ac or 710V dc for 1 minute (qualification test) 30V ac/30V dc working voltage (IEC Class 2 reinforced insulation)
Module OK LED	On: module has power, has passed internal diagnostics, and is communicating over the bus. Flashing: external power failure. Off: Any of the above is not true.
Channel Diagnostics	Over- or under-range by bit reporting output wire broken or load resistance high by bit reporting

(1) Output ripple is the amount a fixed output varies with time, assuming a constant load and temperature.

(2) Repeatability is the ability of the output module to reproduce output readings when the same controller value is applied to it consecutively, under the same conditions and in the same direction.

(3) Rated working voltage is the maximum continuous voltage that can be applied at the input terminal, including the input signal and the value that floats above ground potential (for example, 10V dc input signal and 20V dc potential above ground).

1769-OF8V Output Specifications

Table A.6 1769-OF8V Specifications

Specification	1769-OF8V
Analog Normal Operating Ranges[1]	± 10V dc, 0 to 10V dc, 0 to 5V dc, 1 to 5V dc
Full Scale Analog Ranges[1]	± 10.5V dc, -0.5 to 10.5V dc, -0.5 to 5.25V dc, 0.5 to 5.25V dc
Number of Outputs	8 single-ended
Bus Current Draw (max.)	145 mA at 5V dc 125 mA at 24V dc[2]
Heat Dissipation	2.16 Total Watts *(All points - 10.5V into 1 kΩ - worst case calculated.)*
Digital Resolution Across Full Range	16 bits plus sign (bipolar) ±10V dc: 15.89 bits, 330 µV/bit 0 to +5V dc: 13.89 bits, 330 µV/bit 0 to +10V dc: 14.89 bits, 330 µV/bit +1 to +5V dc: 13.57 bits, 330 µV/bit
Conversion Rate (all channels) max.	5.0 ms
Step Response to 63%[3]	<2.9 ms
Current Load Output	10 mA max.
Load Range Output	> 1 kΩ at 10V dc
Max. Capacitive Load	1 µF
Field Calibration	None required
Overall Accuracy[4]	±0.5% full scale at 25°C

(1) The over- or under-range flag will come on when the normal operating range (over/under) is exceeded. The module will continue to convert the analog input up to the maximum full scale range. The flag automatically resets when within the normal operating range.

(2) If the optional 24V dc Class 2 power supply is used, the 24V dc current draw from the bus is 0 mA.

(3) Step response is the period of time between when the D/A converter was instructed to go from minimum to full range until the device is at 63% of full range.

(4) Includes offset, gain, drift, non-linearity and repeatability error terms.

Specification	1769-OF8V
Accuracy Drift with Temperature	±0.0086% FS per °C
Output Ripple[1] range 0 to 50 kHz (referred to output range)	±0.05%
Non-linearity (in percent full scale)	±0.05%
Repeatability[2] (in percent full scale)	±0.05%
Output Error Over Full Temperature Range (0 to 60°C [+32 to +140°F])	±0.8%
Output Offset Error (0 to 60°C [+32 to +140°F])	±0.05%
Output Impedance	<1 Ω
Open and Short-Circuit Protection	Yes
Maximum Short-Circuit Current	30 mA
Output Overvoltage Protection	Yes
Output Response at System Power Up and Power Down	± 0.5V dc spike for < 5 ms
Rated Working Voltage[3]	30V ac/30V dc
Output Group to Bus Isolation	500V ac or 710V dc for 1 minute (qualification test) 30V ac/30V dc working voltage (IEC Class 2 reinforced insulation)
Module OK LED	On: module has power, has passed internal diagnostics, and is communicating over the bus. Flashing: external power failure. Off: Any of the above is not true.
Channel Diagnostics	Over- or under-range by bit reporting

(1) Output ripple is the amount a fixed output varies with time, assuming a constant load and temperature.

(2) Repeatability is the ability of the output module to reproduce output readings when the same controller value is applied to it consecutively, under the same conditions and in the same direction.

(3) Rated working voltage is the maximum continuous voltage that can be applied at the input terminal, including the input signal and the value that floats above ground potential (for example, 10V dc input signal and 20V dc potential above ground).

Module Addressing and Configuration with MicroLogix 1500

This chapter examines the analog modules' addressing scheme and describes module configuration using RSLogix 500 and MicroLogix 1500.

Input Module Addressing

In the following example, the 1769-IF4 is used. Detailed information on the input image table can be found in 1769-IF4 Input Data File on page 3-2.

Figure B.1 1769-IF4 Memory Map Including Configuration

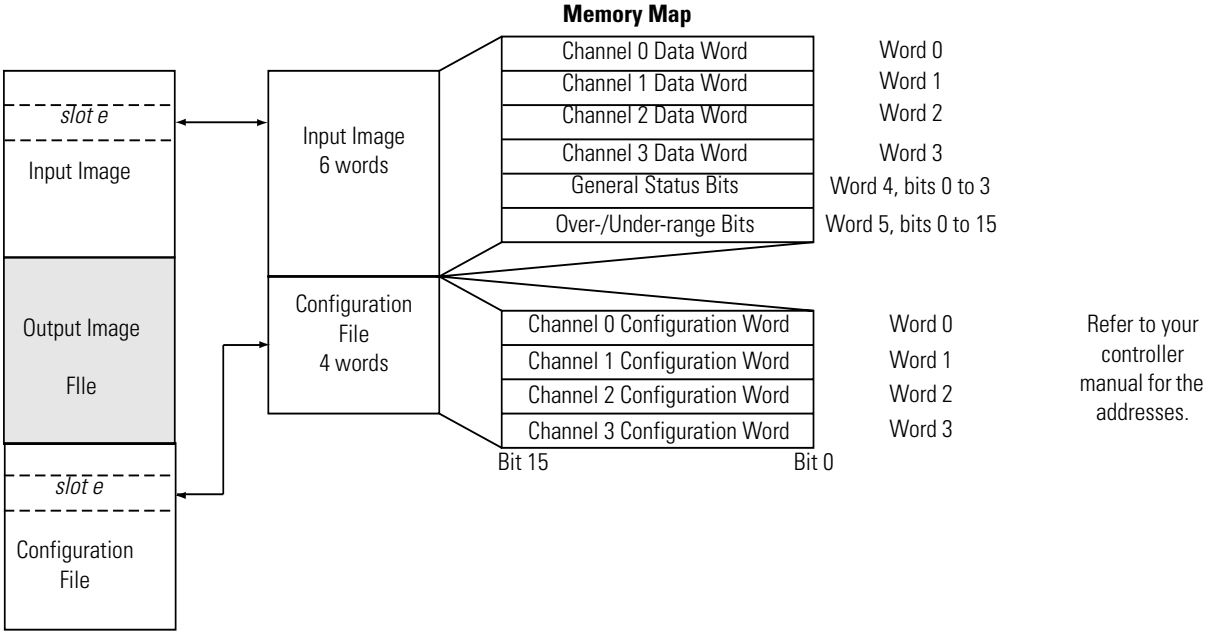

Input Modules Input Image

The input modules' input image file represents data words and status bits. Input words 0 through 3 hold the input data that represents the value of the analog inputs for channels 0 through 3. These data words are valid only when the channel is enabled and there are no errors. Input words 4 and 5 hold the status bits. To receive valid status information, the channel must be enabled.

For example, to obtain the general status of channel 2 of the analog module located in slot 3, use address I:3.4/2.

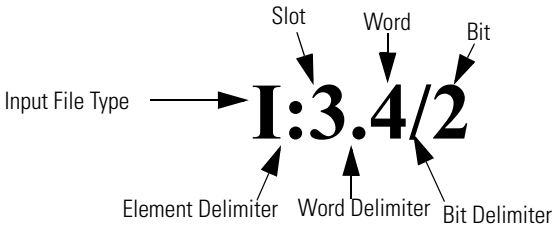

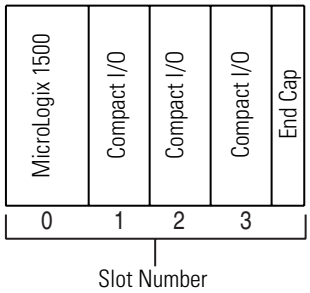

TIP The end cap does not use a slot address.

Input Modules' Configuration File

The configuration file contains information that you use to define the way a specific channel functions. The configuration file is explained in more detail in chapter 4.

The configuration file is modified using the programming software configuration screen. For an example of module configuration using RSLogix 500, see Configuring Analog I/O Modules in a MicroLogix 1500 System on page B-4.

TIP The RSLogix 500 configuration default is to enable each analog input channel. For improved analog input module performance, disable any *unused* channels.

Table B.1 Software Configuration Channel Defaults

1769-IF4 and -IF8		1769-OF2, -OF8C, and -OF8V	
Parameter	**Default Setting**	**Parameter**	**Default Setting**
Enable/Disable Channel[1]	Enabled	Enable/Disable Channel	Enabled
Filter Selection	60 Hz	Output Range Selection	±10V dc
Input Range	±10V dc	Data Format	Raw/Proportional
Data Format	Raw/Proportional		

(1) The 1769-IF4, -IF8, -OF2, -OF8C, and -OF8V modules are disabled by default. You will need to enable the channels.

Configuring Analog I/O Modules in a MicroLogix 1500 System

This example takes you through configuring your 1769 analog input and output modules with RSLogix 500 programming software. This application example assumes your input and output modules are installed as expansion I/O in a MicroLogix 1500 system, and that RSLinx™ is properly configured and a communications link has been established between the MicroLogix processor and RSLogix 500.

Start RSLogix and create a MicroLogix 1500 application. The following screen appears:

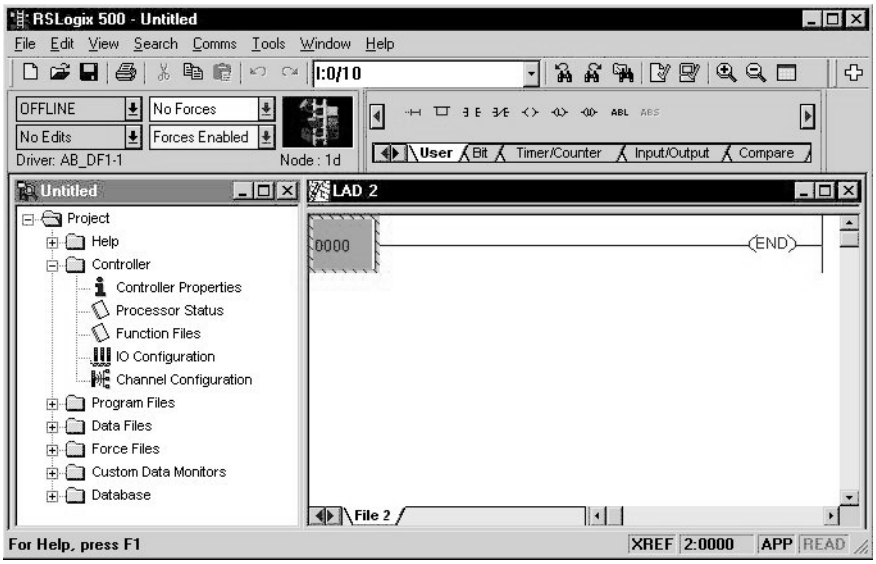

While offline, double-click on the IO Configuration icon under the controller folder and the following IO Configuration screen appears.

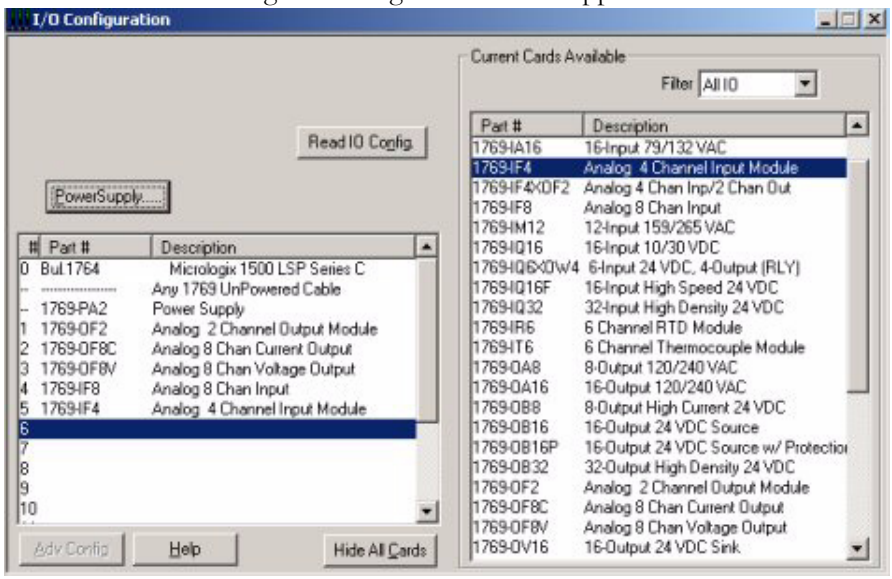

This screen allows you to manually enter expansion modules into expansion slots, or to automatically read the configuration of the controller. To read the existing controller configuration, click on the Read IO Config button.

A communications dialog appears, identifying the current communications configuration so that you can verify the target controller. If the communication settings are correct, click on Read IO Config.

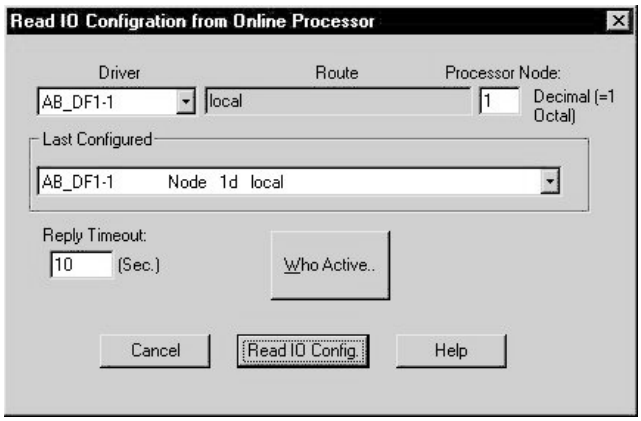

The actual I/O configuration is displayed. In this example, a second tier of I/O is attached to the MicroLogix 1500 processor.

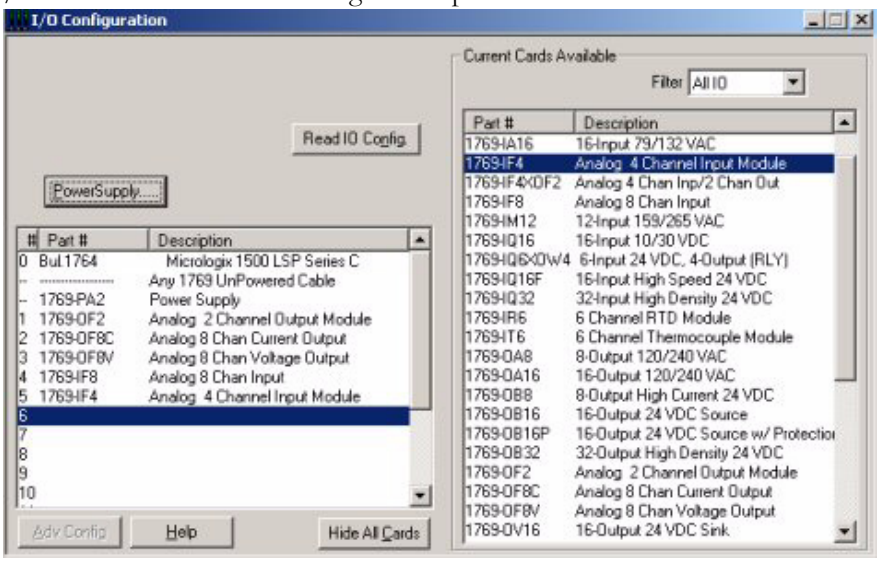

Configuring the Input Modules

For this example, the 1769-IF4 analog input module is installed in slot 1. To configure the module, double-click on the module/slot.

Analog Input Configuration

Each of the four analog input words (channels) are enabled by default. To enable a channel, click its Enable box so that a check mark appears in it. For optimum module performance, disable any channel that is not hardwired to a real input. Then, choose your Filter Frequency, Input Range, and Data Format for each channel.

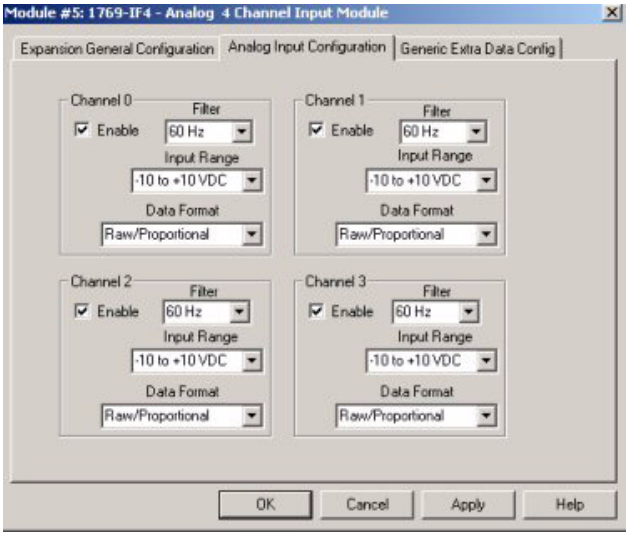

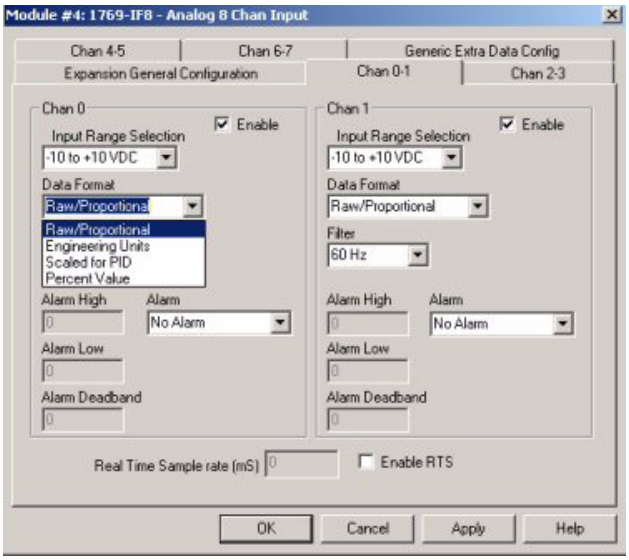

TIP For maximum noise immunity, choose 50 Hz. For the highest speed (fastest signal detection), choose 250 Hz.

Configuring the Output Modules

For this example, the 1769-OF2 analog output module is installed in slot 2. To configure the 1769-OF2, double-click on the module/slot.

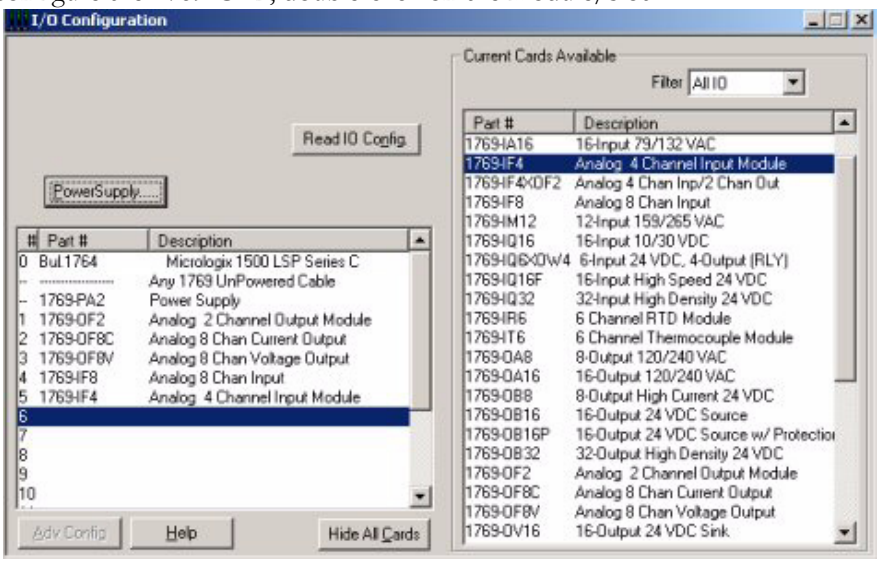

The following general configuration screen appears for the 1769-OF2, -OF8C, and -OF8V output modules.

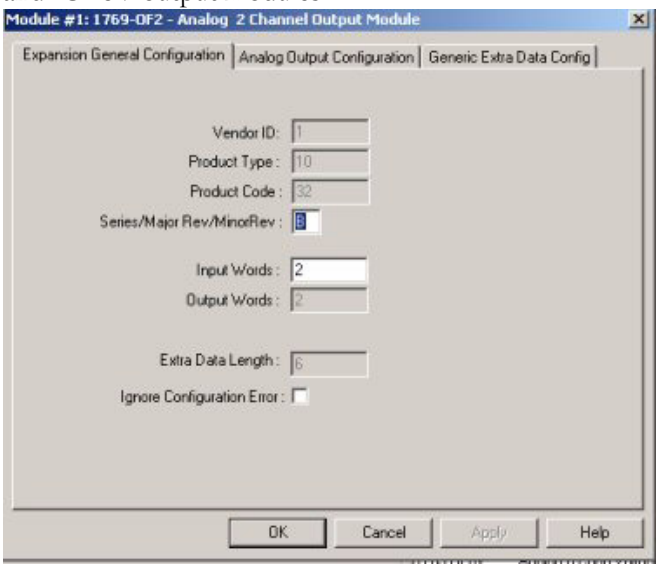

Analog Output Configuration

Both of the output words (channels) are enabled by default. To enable a channel, click its Enable box so that a check mark appears in it. For optimum module performance, disable any channel that is not hardwired to a real input. Then, choose your Filter Frequency, Input Range, and Data Format for each channel.

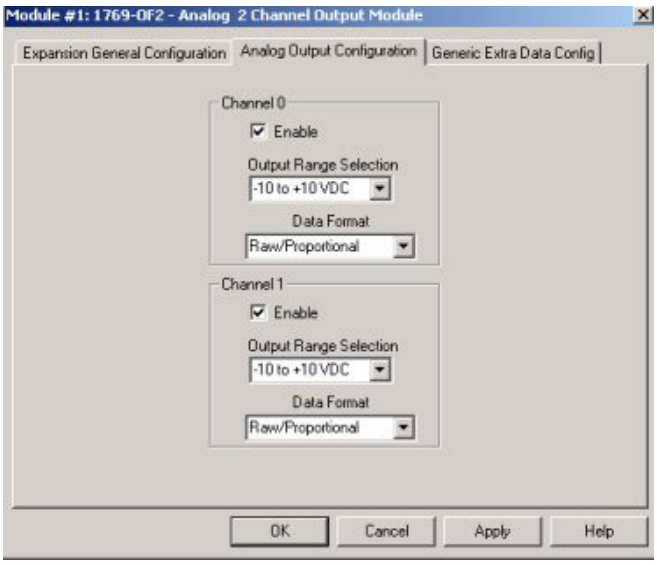

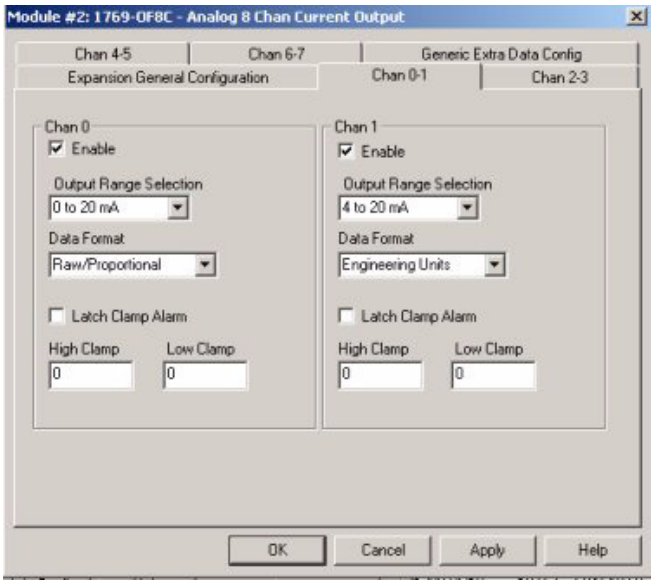

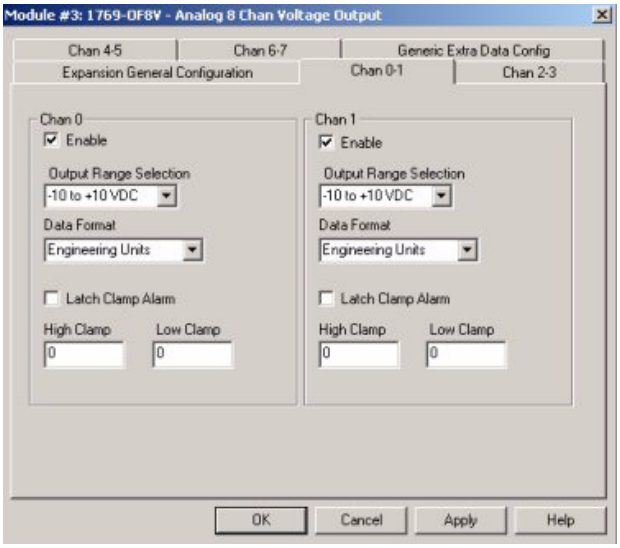
Module #3: 1769-OF8V - Analog 8 Chan Voltage Output
Chan 4-5
Chan 6-7
Generic Extra Data Config
Expansion General Configuration
Chan 0-1
Chan 2-3
Chan 0
Enable
Output Range Selection
-10 to +10 VDC
Data Format
Engineering Units
Latch Clamp Alarm
High Clamp
Low Clamp
0
0
Chan 1
Enable
Output Range Selection
-10 to +10 VDC
Data Format
Engineering Units
Latch Clamp Alarm
High Clamp
Low Clamp
0
0
OK
Cancel
Apply
Help

Notes:

Configuration Using the RSLogix 5000 Generic Profile for CompactLogix Controllers

To configure a 1769 analog I/O module for a CompactLogix Controller in RSLogix 5000 using the Generic Profile, you must first begin a new project in RSLogix 5000. Click on the new project icon or on the FILE pull down menu and select NEW. The following screen appears:

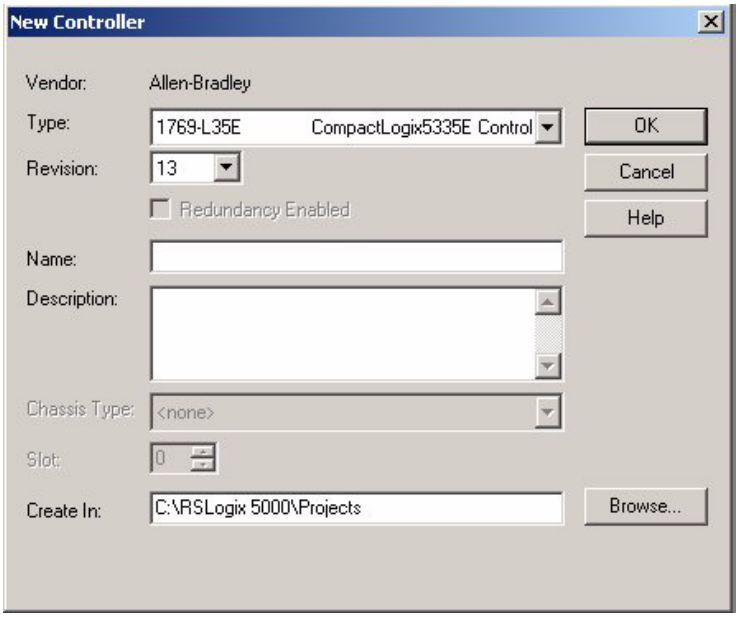

Choose your controller type and enter a name for your project, then click OK. The following main RSLogix 5000 screen appears:

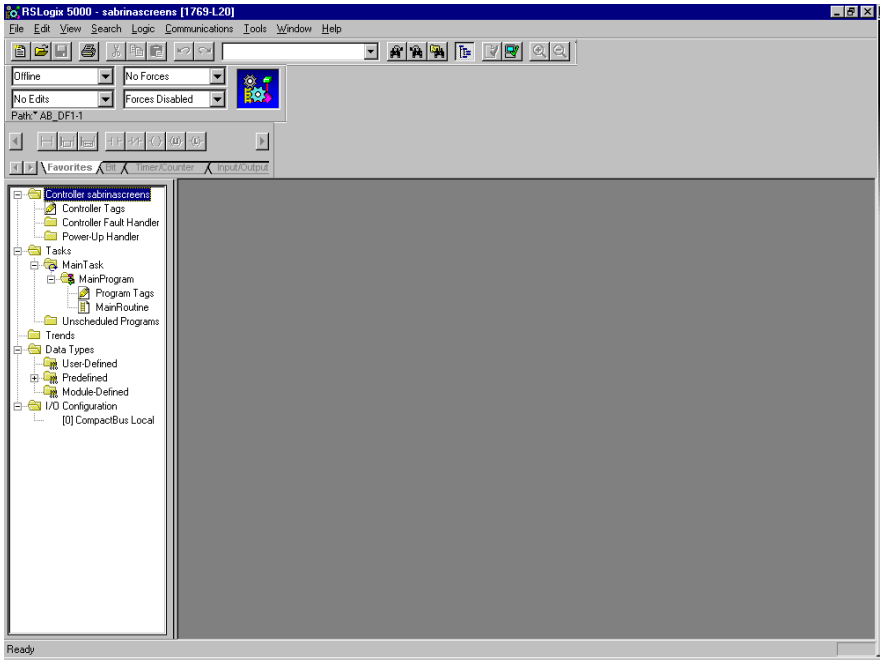

The last entry in the controller organizer on the left of the screen shown above is a line labeled "[0] CompactBus Local". Right click on this line, select "New Module" and the following screen appears:

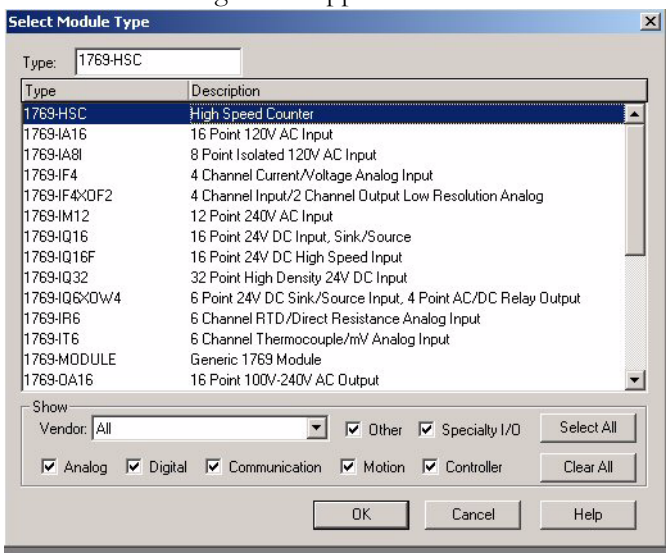

This screen narrows your search for I/O modules to configure into your system. Click the OK button and the following default Generic Profile screen appears:

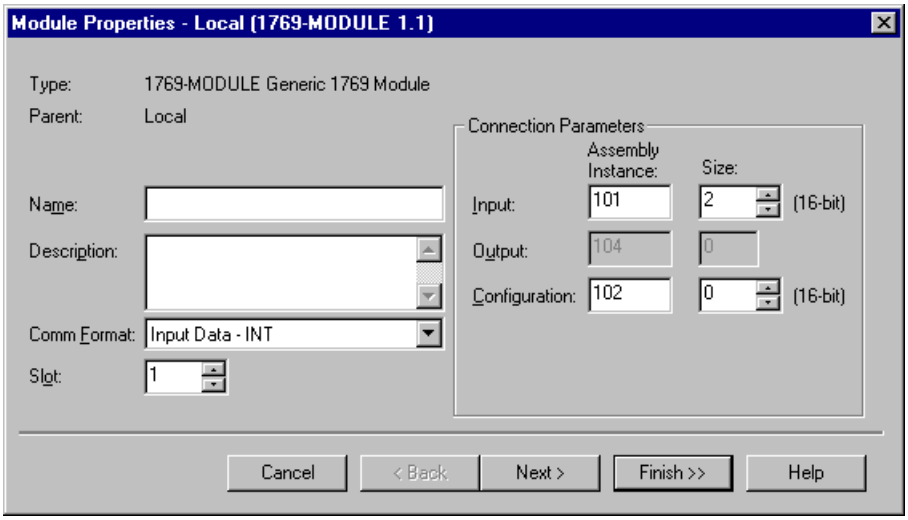

This is the default Generic Profile screen. The first area to fill in for the Generic Profile screen is the name. This helps to easily identify the module type configured on your local Compact Bus. The "Description" field is optional and may be used to provide more details concerning this I/O module in your application.

The next parameter to configure is the "Comm Format". Click the down arrow for this parameter to reveal the choices. For the 1769-OF8C and -OF8V modules, "Data – INT" is used. "Input Data –INT" is used for the 1769-IF8 module.

The slot number must be selected next, even though it begins with the first available slot number, 1, and increments automatically for each subsequent Generic Profile you configure.

Use the following table for the “Comm Format”, “Assembly Instance” and “Size” values for the 1769-IF8, -OF8C, and -OF8V modules if you have an earlier version of RSLogix5000, version 15.

1769 I/O Modules[1]	Comm Format	Parameter	Assembly Instance	Size (16-bit)
IF8	Input Data – INT	Input	101	12
		Output	100	1
		Config	102	50
OF8C and OF8V	Data – INT	Input	101	11
		Output	100	9
		Config	102	64

(1) 1769-OF2 and -IF4 modules do not use the generic profile.

Note the Comm Format, Assembly Instance numbers and their associated sizes for each analog I/O module type and enter them into the Generic Profile.

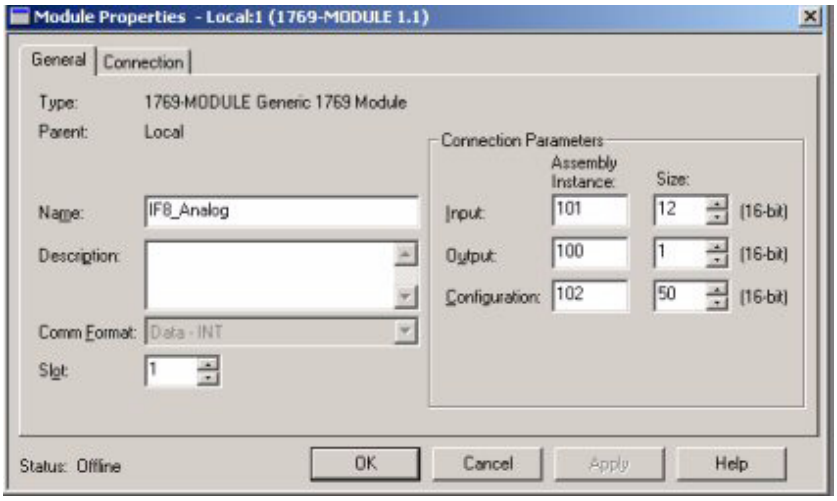

At this point, you may click “Finish” to complete the configuration of your I/O module. If you click “Next”, the following screen appears:

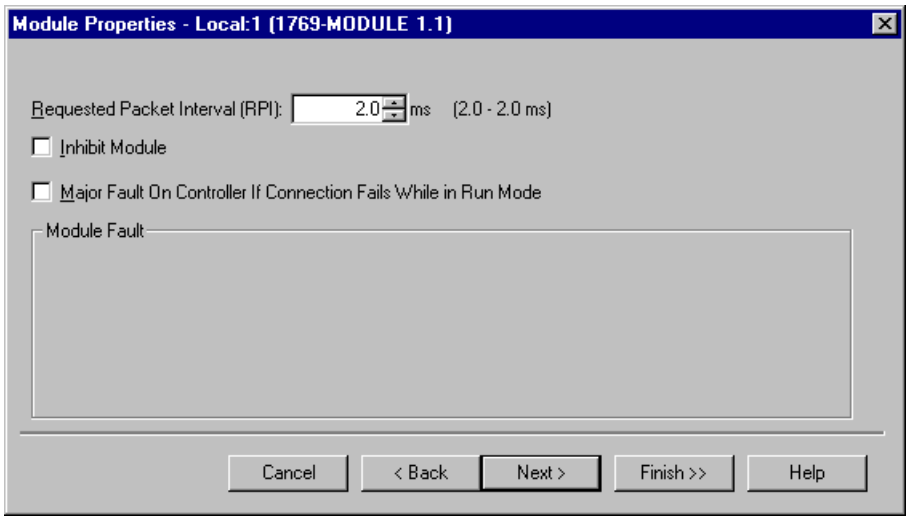

You may choose to inhibit the module or have the controller fault if the connection to this I/O module fails. The defaults for these two parameters are not to inhibit the module and not to fault the controller should an I/O module connection fail.

TIP Refer to the Help screens in RSLogix 5000, under “Connection Tab Overview” for a complete explanation of these features.

You may now click “Finish” to complete the configuration of your analog output module. If you click “Next”, you will see the Module Information screen, which is only filled in when you are online with your controller. If you clicked “Next” to get the Module Information screen, click “Finish” to complete the configuration of your I/O module.

Configure each analog I/O module in this manner.

Configuring I/O Modules

Once you have created Generic Profiles for each analog I/O module in your system, you must then enter configuration information into the Tag database that has been automatically created from the Generic Profile information you entered for each of these modules. This configuration information is downloaded to each module at program download, going to run, and at power up.

This section shows how and where to enter configuration data for each analog I/O module, once Generic Profiles have been created for them.

You must first enter the Controller Tag database, by double-clicking on "Controller Tags" in the upper portion of the controller organizer. The example to follow demonstrates entering configuration data for 1769-OF2 and -IF4 modules.

For demonstration purposes, Generic Profiles have been created for 1769-IF8, -OF8C, and -OF8V modules. The Controller Tags screen looks like the following:

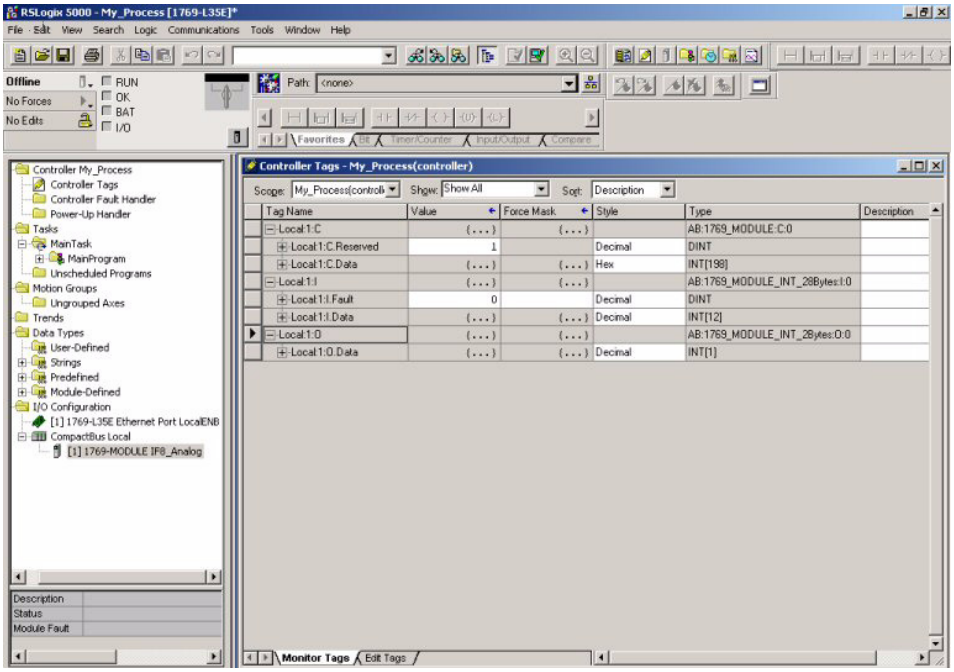

Tag addresses are automatically created for configured I/O modules. All local I/O addresses are preceded by the word Local. These addresses have the following format:

- Input Data: Local:s.I
- Output Data: Local:s.O
- Configuration Data: Local:s.C

  where s is the slot number assigned the I/O modules in the Generic Profiles.

In order to configure an I/O module, you must open up the configuration tag for that module by clicking on the plus sign to the left of its configuration tag in the tag data base.

Configuring Analog Output Modules

To configure the 1769-OF8C or -OF8V module in slot 1, click on the plus sign left of Local:1.C. Configuration data is entered under the Local:1.C.Data tag. Click the plus sign to the left of Local:1.C.Data to reveal the 8 integer data words where configuration data may be entered for the 1769-OF8C or -OF8V module.

Configuring Analog Input Modules

To configure the input modules in slot 2, click on the plus sign left of Local:2.C. Click on the plus sign to the left of Local:2.C.Data to reveal the 4 integer data words where the configuration data may be entered for the module. The tag addresses for these 4 words are Local:2.C.Data[0] through Local:2.C.Data[3].

Notes:

Configuring Modules in a Remote DeviceNet System with a 1769-ADN DeviceNet Adapter

Overview

In this example, the 1769-IF4 and 1769-OF8C modules are in a remote DeviceNet system controlled by a 1769-ADN DeviceNet adapter. RSNetWorx for DeviceNet software, version 2.23 or later, is used to configure the network and the I/O modules.

The configuration method described here must be done prior to configuring the DeviceNet adapter in the DeviceNet scanner's scanlist. This applies if you are configuring an I/O module offline, then downloading to the adapter, or if you do the configuration online. After the adapter is placed in the scanner's scanlist, you can only configure or re-configure the I/O module using explicit messages or by removing the adapter from the scanner's scanlist, modifying the configuration of the I/O module, and then adding the adapter back into the scanner's scanlist.

For additional information on configuring DeviceNet scanners and adapters, refer to the documentation for those products. The DeviceNet Adapter User Manual, publication 1769-UM001, contains examples on modifying I/O module configurations with explicit messages while the system is running.

IMPORTANT You must use a Series B 1769-ADN adapter with the 1769-IF8, -OF8C, and -OF8V modules.

TIP After setting up each slot, be sure to choose Apply.

Add the DeviceNet Adapter to the Scanlist

In this part of the example, the 1769-ADN adapter is added to the DeviceNet scanner's scanlist.

1. Start the RSNetWorx for DeviceNet software.

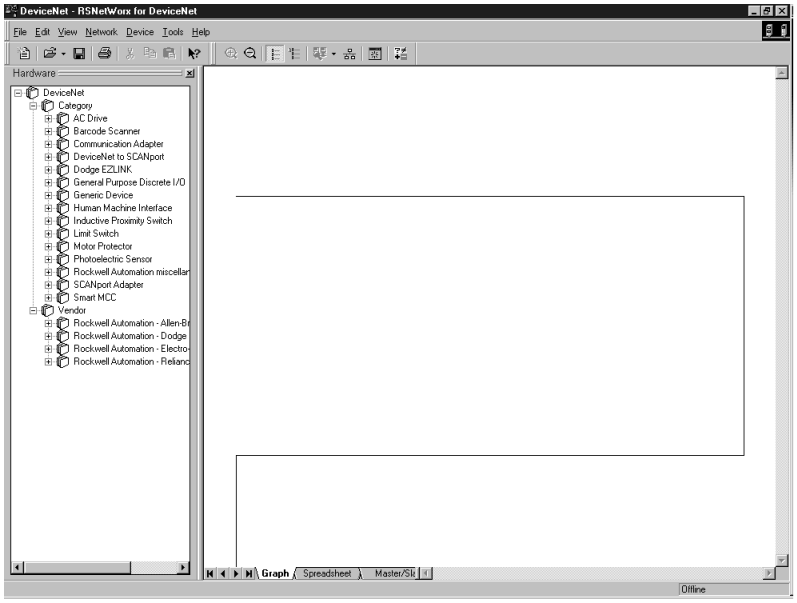

2. In the left column under Category, click the + sign next to Communication Adapters.

3. In the list of products, double-click the 1769-ADN to place it on the network.

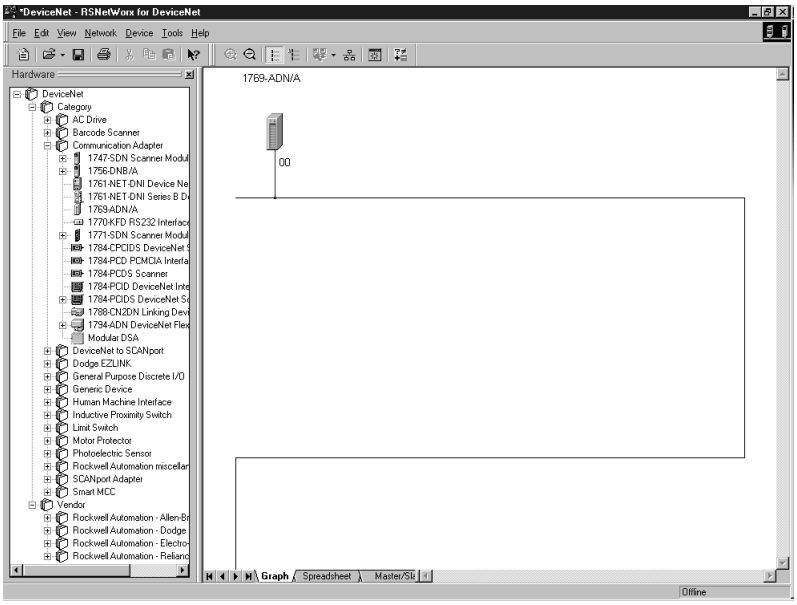

TIP If 1769-ADN is not an option, you have an earlier version of RSNetWorx for DeviceNet software.

4. To configure I/O for the adapter, double-click the adapter icon that appears on the network.

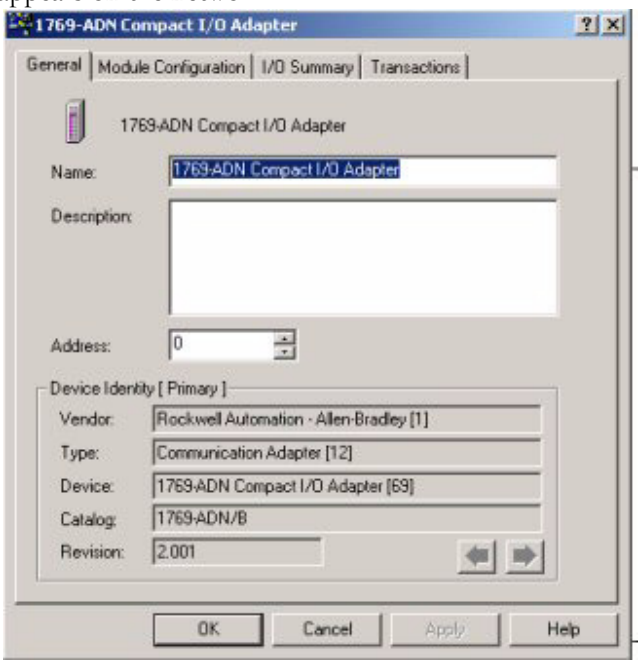

5. Click the Module Configuration tab.

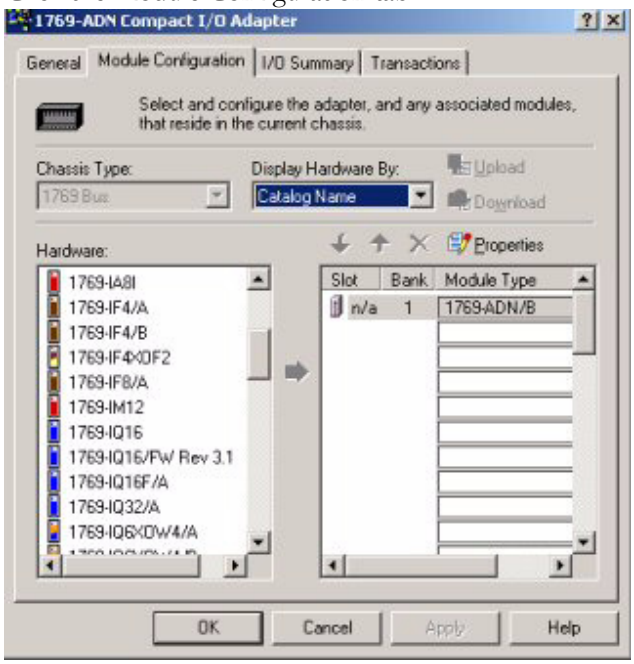

TIP

The I/O Summary tab provides the configured sized and format of the I/O data.

The Transaction tab lets you send services supported by the device. The Clear/Reset Memory transaction returns the module's configuration to the factory defaults, that is, empty. This operation cannot be undone.

Configure the 1769-IF4 Input Module Example

The 1769-ADN adapter appears in slot 0. Your I/O modules, power supplies, end caps, and interconnect cables must be entered in the proper order, following the 1769 I/O rules contained in the DeviceNet Adapter User Manual, publication 1769-UM001A. To simplify this example, we placed the 1769-IF4 in slot 1 to show how it is configured.

1. To place the input module into slot 1, click Module Configuration.

   A list of all possible 1769 products appears.

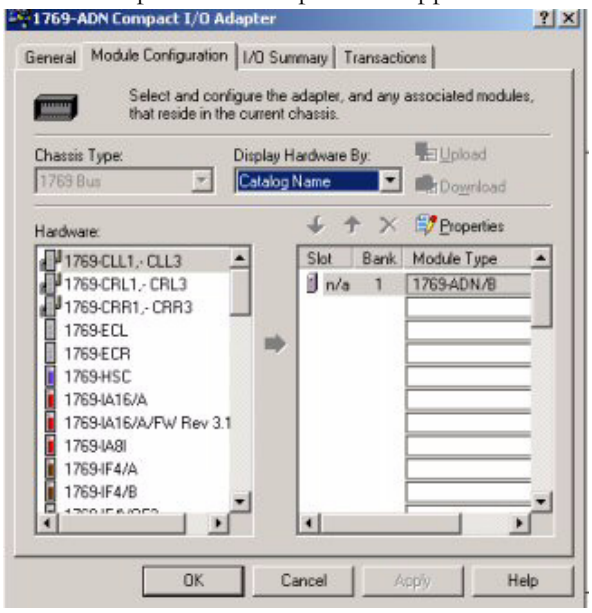

2. Select the 1769-IF4/B.

   Slot 1 appears to the right of the 1769-IF4.

3. Under the General tab, select the appropriate bank.

   Bank 1 was selected in this example.

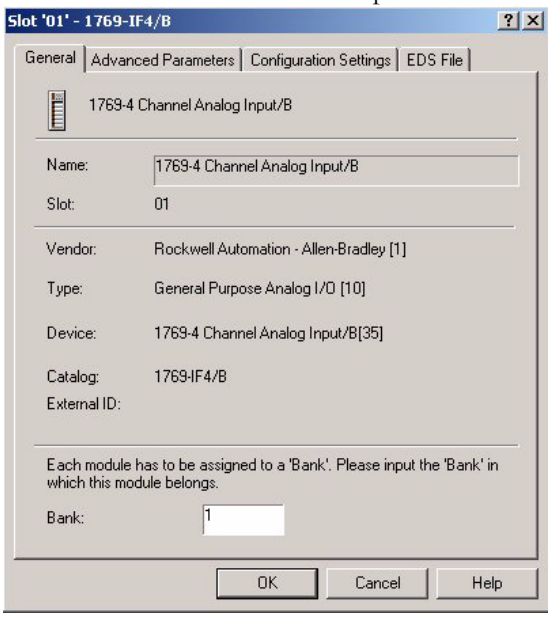

4. Double-click this slot 1 box.

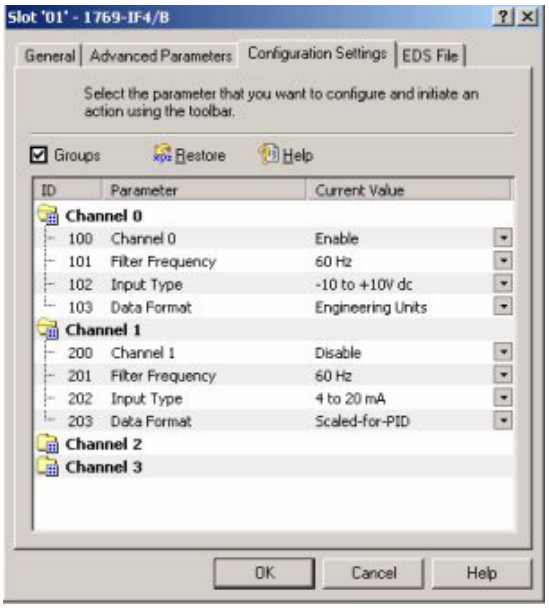

By default, the 1769-IF4 module contains six input words and no output words.

5. Click the Data Description button to see what the six input words represent.

   The first four words are the actual analog input data, while the last two words contain status and over- and under-range bits for the four channels.

6. Click OK or Cancel to exit this screen and return to the Configuration screen.

7. If your application requires only four data words and not the status information, click the Set for I/O only button

   The input size changes to four words. The revision number for the series B 1769-IF4 module is two. With this setting, you may leave the electronic keying to Exact Match. It is not recommended to disable keying, but if you are not sure of the exact revision of your module, selecting Compatible Module allows your system to operate, while still requiring a 1769-IF4 module in slot 1.

   The series B 1769-IF4 module differs from the series A module only in that it allows external 24V dc power. The external power connection allows you to draw 24V dc power for the module from your external source, should your 1769 power supply not provide enough 24V dc power for your particular set of 1769 I/O modules.

If you are using external 24V dc power for your 1769-IF4 module, you must click the white box to the left of "Using External +24v Power Source", so that a check mark appears in the box. Do not click on the box if you are not using external 24V dc power.

Each of the four analog input channels are disabled by default. To enable a channel, click its Enable box, so that a check mark appears in it. Then, choose your Filter frequency, Input Range, and Data Format for each channel. See chapter 4 of this manual for a complete description of each of these configuration categories.

1769-IF4 Example of External Power

In this example, channels 0 through 4 are used and external power is being supplied from an external 24V dc power source. In addition, channels 0 and 1 are driven by 4 to 20 mA transducers, while channels 2 and 3 are driven by devices generating 0 to 10V dc analog signals.

Throughput is not a concern for this application. However, noise immunity is. Therefore, the filter frequency for maximum noise immunity, 50 Hz, has been chosen. The analog input on channel 0 is used as the PV (input) value for a PID loop. Therefore, the Data Format for this channel is Scaled-for-PID. Channels 1 through 3 are not being used with a PID loop and have been configured for the Raw/Proportional Data Format for maximum resolution.

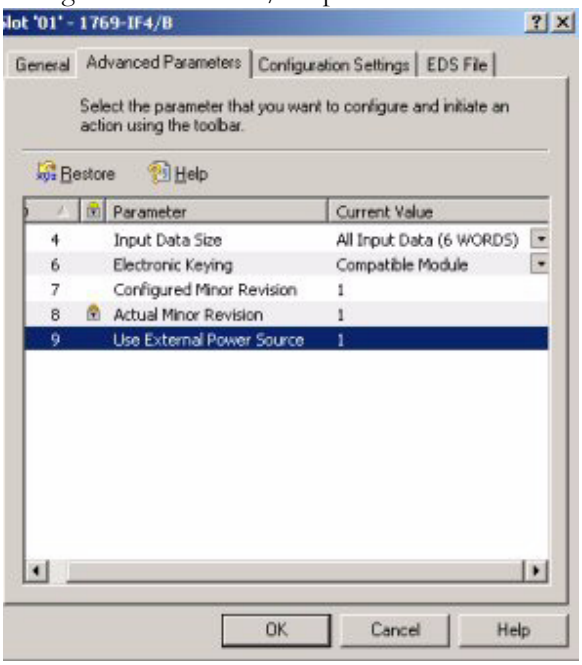

Click OK, and your configuration for the 1769-IF4 analog input module is complete.

Configure the 1769-OF8C Output Module Example

After leaving the 1769-IF4 configuration screen, the I/O Bank 1 screen for the 1769-ADN adapter should look like the following:

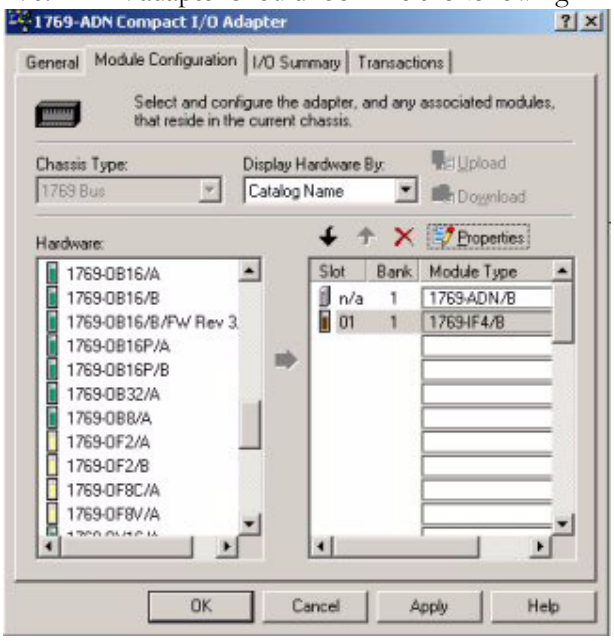

1. Just as you did for the 1769-IF4 module, click on the drop-down arrow next to the empty slot and this time choose the 1769-OF8C.

2. Click on the Slot 2 button that appears to the right of the 1769-OF8C module.

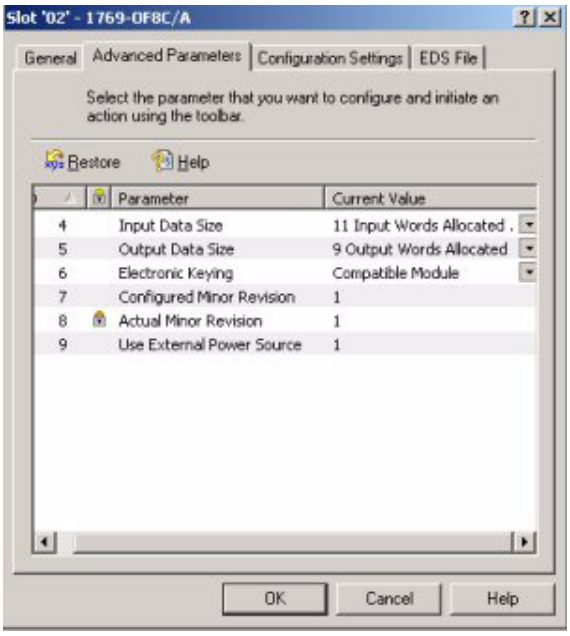

By default, the 1769-OF8C module contains eleven input words and nine output words.

3. Click on the Configuration Settings button to see what the eleven input and nine output words represent.

   The eleven input words contain channel diagnostic data for the eight channels. The nine output words contain the actual analog output data for the eight channels along with one additional word containing the control bits for unlatching alarms.

4. Click OK or Cancel to exit this screen and return to the Configuration screen.

5. Select No Input Data under Input Data Size if your application requires only the data words and not the status information.

   The Input Size changes to 0, while the Output Size remains at nine words. The Revision number for the series B 1769-OF8C module is two. With this, you may leave the Electronic Keying to Exact Match. It is not recommended to disable keying, but if you are unsure of the exact revision of your module, selecting Compatible Module allows your system to operate, while still requiring a 1769-OF8C module in slot 2.

1769-OF8C Example of External Power

The series B 1769-OF8C module differs from the series A module only in that it allows external 24V dc power. The external power connection allows you to draw 24V dc power for the module from your external source, should your 1769 power supply not provide enough 24V dc power for your particular set of 1769 I/O modules.

If you are using external 24V dc power for your 1769-OF8C module, you must click the white box to the left of “Using External +24v Power Source”, so that a check mark appears in the box. Do not click on the box if you are not using external 24V dc power.

1769-OF8C Example of Output Channels

Each of the two analog output channels are disabled by default. To enabled a channel, click its Enable box so that a check mark appears in it. Then, choose your Output Range, Data Format, and the state or your outputs should the controlling processor be placed into the program mode, fault, or lose communications.

Program State and Fault State each have two options:

- Hold Last State

  Hold last state will hold the analog output at the last value received before the processor was placed in program mode or before it faulted.

- User-defined State

  When selecting user-defined state, you must specify a value for the analog output to revert to should the processor be placed in program mode or fault. The values used for user-defined state must be valid values determined by the selected Data Format and Output Range. If communications fail, you may also choose whether your Program State or Fault State options take place for each channel.

In this example, channels 0 and 1 are enabled and configured for 4 to 20 mA Output Ranges. The Data Format for channel 0 is Scaled-for-PID, because it is the CV (output) value from your PID instruction. Hold last state was chosen for all possible conditions other than Run mode for channel 0.

Channel 1 is also enabled and configured for 4 to 20 mA Output Range. Raw/Proportional Data Format was chosen for maximum resolution. In addition, a requirement of the system is that this analog output must always be at 4 mA if the system is not in control of it.

Therefore, a value of 6241 (decimal) must be used in the event the controlling processor is placed into program mode, faults, or loses communications. The decimal number 6241 represents 4 mA, when using the Raw/Proportional Data Format.

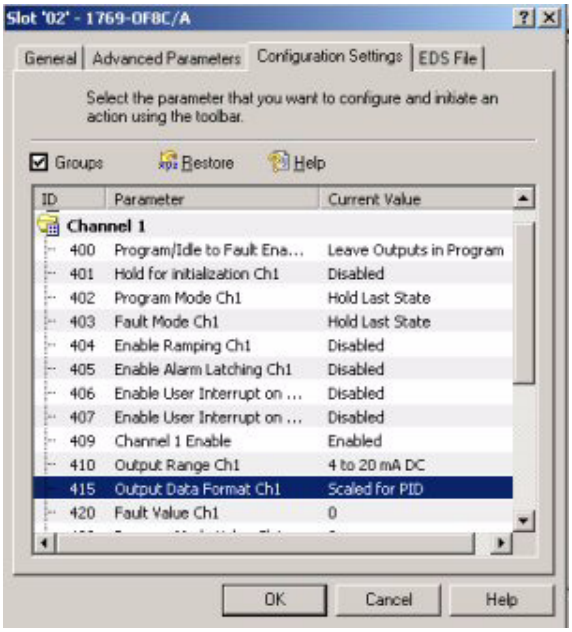

Click OK, and your configuration for the 1769-OF8C analog output module is complete.

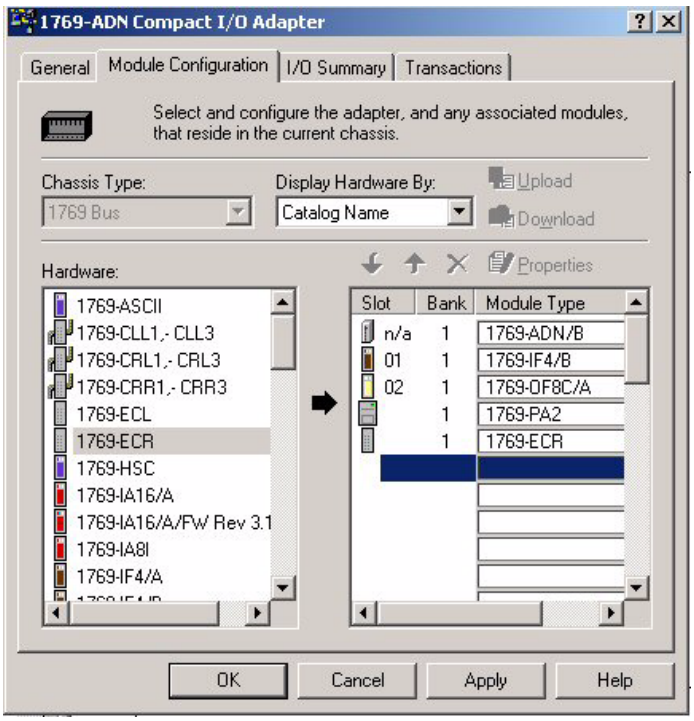

IMPORTANT Be sure to add appropriate power supplies and end caps.

Two's Complement Binary Numbers

The processor memory stores 16-bit binary numbers. Two's complement binary is used when performing mathematical calculations internal to the processor. Analog input values from the analog modules are returned to the processor in 16-bit two's complement binary format. For positive numbers, the binary notation and two's complement binary notation are identical.

As indicated in the figure on the next page, each position in the number has a decimal value, beginning at the right with 2^0 and ending at the left with 2^{15}. Each position can be 0 or 1 in the processor memory. A 0 indicates a value of 0; a 1 indicates the decimal value of the position. The equivalent decimal value of the binary number is the sum of the position values.

Positive Decimal Values

The far left position is always 0 for positive values. This limits the maximum positive decimal value to 32767 (all positions are 1 except the far left position).

Figure E.1 Positive Decimal Values

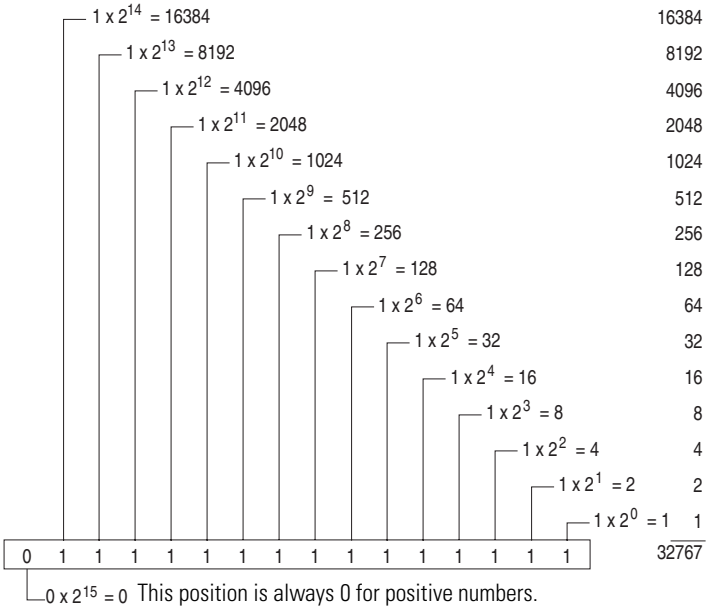

EXAMPLE

0000 1001 0000 1110 = $2^{11}+2^8+2^3+2^2+2^1$ = 2048+256+8+4+2 = 2318

0010 0011 0010 1000 = $2^{13}+2^9+2^8+2^5+2^3$ = 8192+512+256+32+8 = 9000

Negative Decimal Values

In two's complement notation, the far left position is always 1 for negative values. The equivalent decimal value of the binary number is obtained by subtracting the value of the far left position, 32768, from the sum of the values of the other positions. In Figure E.2 all positions are 1 and the value is 32767 - 32768 = -1.

Figure E.2 Negative Decimal Values

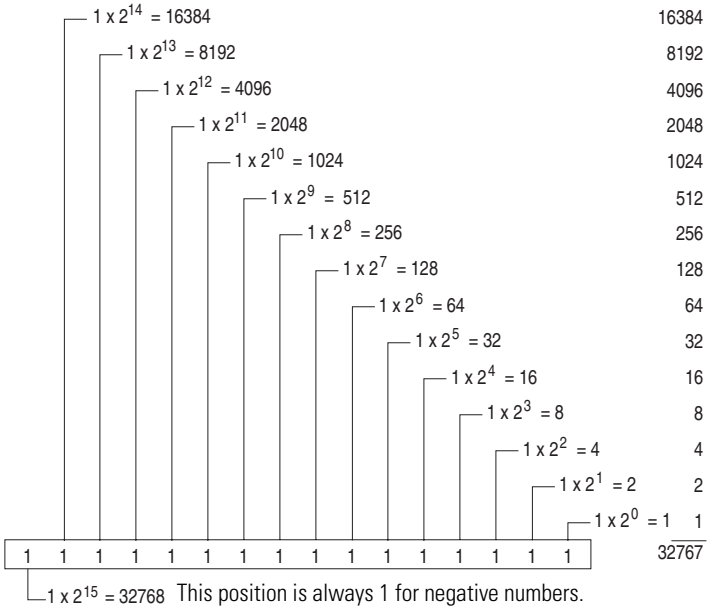

EXAMPLE

1111 1000 0010 0011 = $(2^{14}+2^{13}+2^{12}+2^{11}+2^{5}+2^{1}+2^{0}) - 2^{15}$ =
(16384+8192+4096+2048+32+2+1) - 32768 =
30755 - 32768 = -2013

The following terms and abbreviations are used throughout this manual. For definitions of terms not listed here refer to *Allen-Bradley's Industrial Automation Glossary*, Publication AG-7.1.

A/D Converter– Refers to the analog to digital converter inherent to the module. The converter produces a digital value whose magnitude is proportional to the magnitude of an analog input signal.

alternate last state – A configuration selection that instructs the module to convert a user-specified value from the channel fault or program/idle word to the output value when the module enters the fault or program mode.

analog input module – A module that contains circuits that convert analog voltage or current input signals to digital values that can be manipulated by the processor.

attenuation – The reduction in the magnitude of a signal as it passes through a system.

bus connector – A 16-pin male and female connector that provides electrical interconnection between the modules.

channel – Refers to analog input or output interfaces available on the module's terminal block. Each channel is configured for connection to a variable voltage or current input or output device, and has its own data and diagnostic status words.

channel update time – The time required for the module to sample and convert the input signals of one enabled input channel and update the channel data word.

common mode rejection – For analog inputs, the maximum level to which a common mode input voltage appears in the numerical value read by the processor, expressed in dB.

common mode rejection ratio – The ratio of a device's differential voltage gain to common mode voltage gain. Expressed in dB, CMRR is a comparative measure of a device's ability to reject interference caused by a voltage common to its input terminals relative to ground. $CMRR=20\ Log_{10\ (V1/V2)}$

common mode voltage – For analog inputs, the voltage difference between the negative terminal and analog common during normal differential operation.

common mode voltage range – For analog inputs, the largest voltage difference allowed between either the positive or negative terminal and analog common during normal differential operation.

configuration word – Contains the channel configuration information needed by the module to configure and operate each channel.

D/A Converter– Refers to the digital to analog converter inherent to the output module. The converter produces an analog dc voltage or current signal whose instantaneous magnitude is proportional to the magnitude of a digital value.

dB – (decibel) A logarithmic measure of the ratio of two signal levels.

data echo – The analog value currently being converted by the D/A converter and shown in words 2 and 3 of the output module's input data file. Under normal operating conditions, the data echo value is the same value that is being sent from the bus master to the output module.

data word – A 16-bit integer that represents the value of the analog input or output channel. The channel data word is valid only when the channel is enabled and there are no channel errors. When the channel is disabled the channel data word is cleared (0).

differential operation – The difference in voltage between a channel's positive terminal and negative terminal.

digital filter – A low-pass filter incorporated into the A/D converter. The digital filter provides very steep roll-off above it's cut-off frequency, which provides high frequency noise rejection.

filter – A device that passes a signal or range of signals and eliminates all others.

filter frequency – (-3 dB frequency) The user-selectable frequency.

full scale – The magnitude of voltage or current over which normal operation is permitted.

full scale error – (gain error) The difference in slope between the actual and ideal analog transfer functions.

full scale range – (FSR) The difference between the maximum and minimum specified analog input values.

hold last state – A configuration selection that instructs the module to keep the outputs at the last converted value prior to the condition that caused the control system to enter the fault or program mode.

input image – The input from the module to the controller. The input image contains the module data words and status bits.

LSB – (Least Significant Bit) The bit that represents the smallest value within a string of bits. For analog modules, 16-bit, two's complement binary codes are used in the I/O image in the card.

For analog inputs, the LSB is defined as the rightmost bit, bit 0, of the 16-bit field. For analog outputs, the three rightmost bits are not significant, and the LSB is defined as the third bit from the right, bit 2, of the 16-bit field.

linearity error – An analog input or output is composed of a series of voltage or current values corresponding to digital codes. For an ideal analog input or output, the values lie in a straight line spaced by a voltage or current corresponding to 1 LSB. Any deviation of the converted input or actual output from this line is the linearity error of the input or output. The linearity is expressed in percent of full scale input or output. See the variation from the straight line due to linearity error (exaggerated) in the example below.

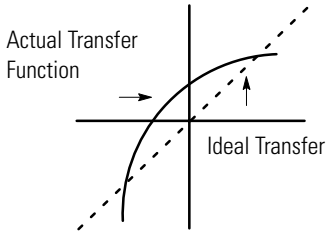

number of significant bits – The power of two that represents the total number of completely different digital codes an analog signal can be converted into or generated from.

module scan time – same as *module update time*

module update time – For input modules, the time required for the module to sample and convert the input signals of all enabled input channels and make the resulting data values available to the processor. For output modules, the time required for the module to receive the digital code from the processor, convert it to the analog output signal, and send it to the output channel.

multiplexer – An switching system that allows several signals to share a common A/D or D/A converter.

normal mode rejection – (differential mode rejection) A logarithmic measure, in dB, of a device's ability to reject noise signals between or among circuit signal conductors.

normal operating range – Input or output signals are within the configured range. See page 1-2 for a list of input and output types/ranges.

overall accuracy – The worst-case deviation of the output voltage or current from the ideal over the full output range is the overall accuracy. For inputs, the worst-case deviation of the digital representation of the input signal from the ideal over the full input range is the overall accuracy. this is expressed in percent of full scale.

Gain error, offset error, and linearity error all contribute to input and output channel accuracy.

output accuracy – The difference between the actual analog output value and what is expected, when a given digital code is applied to the d/a converter. Expressed as a ± percent of full scale. The error will include gain, offset and drift elements, and is defined at 25°C, and also over the full operating temperature range (0 to 60°C).

output image – The output from the controller to the output module. The output image contains the analog output data.

analog output module – An I/O module that contains circuits that output an analog dc voltage or current signal proportional to a digital value transferred to the module from the processor.

repeatability – The closeness of agreement among repeated measurements of the same variable under the same conditions.

resolution – The smallest detectable change in a measurement, typically expressed in engineering units (e.g. 1 mV) or as a number of bits. For example a 12-bit system has 4096 possible output states. It can therefore measure 1 part in 4096.

status word – Contains status information about the channel's current configuration and operational state. You can use this information in your ladder program to determine whether the channel data word is valid.

step response time – For inputs, this is the time required for the channel data word signal to reach a specified percentage of its expected final value, given a large step change in the input signal.

update time – see "module update time"

Numerics

1769-ADN
configuration example D-1–D-10
user manual Preface-2
-3 dB frequency 3-7, 3-24

A

A/D
converter 1-7
definition 1-1
abbreviations 1-1
alarm deadband 3-31
alarms
process alarm 3-30
analog input data 3-3, 3-18
analog input module
definition 1-1
overview 1-1
attenuation
cut-off frequency 3-7
definition 1-1

B

bus connector
definition 1-1
locking 2-6
bus interface 1-5

C

calibration 1-10
1769-IF4 A-3
1769-OF2 A-7
channel
definition 1-1
channel diagnostics 5-3
channel reconfiguration time 3-8, 3-24
channel scan time 3-8, 3-24
channel status LED 1-6
channel step response 3-6, 3-23
channel switching time 3-8, 3-24
channel update time
definition 1-1
CMRR. See common mode rejection ratio
common mode rejection 3-6, 3-23, A-3
definition 1-1
common mode rejection ratio
definition 1-1
common mode voltage
definition 1-1
common mode voltage range
definition 1-1
specification A-3
common mode voltage rating 3-6, 3-23
configuration errors 5-6
configuration word
1769-IF4 3-5, 3-22
1769-OF2 4-6
definition 1-2
contacting Rockwell Automation 5-12
current draw
1769-IF4 2-2, A-3
1769-OF2 2-2, A-3
cut-off frequency 3-7, 3-24

D

D/A converter 1-9
definition 1-2
data echo 4-4, 4-21
definition 1-2
data loopback 4-4, 4-21
See also *data echo.*
data word
definition 1-2
dB
definition 1-2
decibel. See dB.
definition of terms 1-1
DeviceNet adapter
configuration example ??–D-10
user manual publication number Preface-2
diagnostic bits 4-2, 4-20
differential mode rejection. See normal mode rejection.
differential operation
definition 1-2
digital filter 3-6, 3-23
definition 1-2
DIN rail mounting 2-8

E

electrical noise 2-4
EMC Directive 2-1
end cap terminator 2-6
error codes 5-6
error definitions 5-4

errors
configuration 5-6
critical 5-4
extended error information field 5-5
hardware 5-5
module error field 5-5
non-critical 5-4
European Union Directives 2-1
extended error codes 5-6
extended error information field 5-5
external power switch 2-10

F

fault condition
at power-up 1-6
fault mode 4-8
fault value 4-11, 4-31
filter 3-6, 3-23
definition 1-2
filter frequency 3-6, 3-23
and channel step response 3-6, 3-23
and channel update time 3-7, 3-24
definition 1-2
finger-safe terminal block 2-16
frequency
cut-off frequency 3-7, 3-24
response graphs 3-7, 3-24
FSR. See full scale range.
full scale
definition 1-2
full scale error
definition 1-2
full scale range
1769-IF4 specifications A-3
1769-OF2 specifications A-7
definition 1-2

G

gain error. See full scale error.
generic profile
configuration example C-1
grounding 2-10

H

hardware errors 5-5
heat considerations 2-4
hold last state
bits 4-2, 4-21
definition 1-2
fault mode 4-8
program/idle mode 4-9, 4-29, 4-30

I

inhibit function 5-12
input data file 4-2, 4-19
input data formats
engineering units 3-10, 3-28
percent range 3-10, 3-28
raw/proportional data 3-10, 3-27
scaled for PID 3-10, 3-28
valid formats/ranges 3-11, 3-28
input filter selection 3-6, 3-23
input image
definition 1-2
input module
channel configuration 3-5, 3-22
enable channel 3-6, 3-23
input module status
general status bits 3-3, 3-18
over-range flag bits 3-3, 3-19
under-range flag bits 3-3, 3-19
input type/range selection 3-9, 3-27
installation 2-1–2-9
grounding 2-10
heat and noise considerations 2-4

L

least significant bit. See LSB.

M

module error field 5-5
module inhibit function 5-12
module scan time
definition 1-3
module update time 3-8, 3-24
definition 1-3
examples 3-9, 3-26
mounting 2-6–2-8
multiplexer
definition 1-3
multiplexing 1-7

N

negative decimal values E-2
noise rejection 3-6, 3-23
normal mode rejection
definition 1-3
ratio A-3
number of significant bits
definition 1-3

O

open-circuit detection 3-3, 3-19, 5-3
operation
system 1-6
out-of-range detection 5-3
over-range flag bits 3-3, 3-19, 4-3, 4-20
under-range flag bits 3-3, 3-19, 4-3, 4-20
output data file 4-2, 4-18
output data formats
engineering units 4-7
percent full range 4-8
raw/proportional data 4-7
scaled for PID 4-7
valid formats/ranges 4-12, 4-33, 4-34
output image
definition 1-4
output module
channel configuration 4-6, 4-24
configuration data file 4-5, 4-22
enable channel 4-7, 4-25
output module status
diagnostic bits 4-2, 4-20
general status bits 4-3, 4-19
hold last state bits 4-2, 4-21
over-range flag bits 4-3, 4-20
under-range flag bits 4-3, 4-20
output range selection 4-8
overall accuracy
definition 1-4
over-range flag bits 3-3, 3-19, 4-3, 4-20

P

panel mounting 2-7–2-8
positive decimal values E-1
power-up diagnostics 5-3
power-up sequence 1-6
process alarms
1769-IF8 modules 3-30
program alteration 5-2
program/idle mode 4-9, 4-29, 4-30
program/idle to fault enable 4-10, 4-31
program/idle value 4-11, 4-32

R

reconfiguration time 3-8, 3-24
removing terminal block 2-15
replacing a module 2-9
resolution
definition 1-4
input channel 3-13
output channel 4-15
RSLogix 500
configuration example B-1–??
RSLogix 5000
configuration example C-1–??
RSNetworx
configuration example ??–D-10

S

safety circuits 5-2
scan time 3-8, 3-24, 1-3
spacing 2-6
specifications A-1
input
1769-IF8 A-5
output
1769-OF8C A-9
1769-OF8V A-11
status word
definition 1-4
step response 3-6, 3-23
step response time
definition 1-4
switching time 3-8, 3-24
system operation 1-6

T

terminal block
removing 2-15
wiring 2-16
terminal door label 2-18
terminal screw torque 2-16
troubleshooting
safety considerations 5-1
two's complement binary numbers E-1

U

under-range flag bits 3-3, 3-19, 4-3, 4-20
update time. See channel update time.
update time. See module update time.

W

wire size 2-16
wiring 2-1
differential inputs 2-19
input module 2-19–2-21
input terminal layout 2-19
mixed transmitter type 2-21
module 2-16
modules 2-17
ouput terminal layout 2-24
output module 2-24
routing considerations 2-4
single-ended sensor/transmitter types 2-20
terminal block 2-16

How Are We Doing?

Your comments on our technical publications will help us serve you better in the future.
Thank you for taking the time to provide us feedback.

You can complete this form and mail (or fax) it back to us or email us at
RADocumentComments@ra.rockwell.com

Pub. Title/Type Compact I/O Analog Modules

Cat. No. 1769-IF4, -IF8, -OF2, -OF8C, and -OF8V Pub. No. 1769-UM002B-EN-P Pub. Date July 2005 Part No.

Please complete the sections below. Where applicable, rank the feature (1=needs improvement, 2=satisfactory, and 3=outstanding).

Overall Usefulness	1 2 3	How can we make this publication more useful for you?
Completeness (all necessary information is provided)	1 2 3	Can we add more information to help you? procedure/step illustration feature example guideline other explanation definition
Technical Accuracy (all provided information is correct)	1 2 3	Can we be more accurate? text illustration
Clarity (all provided information is easy to understand)	1 2 3	How can we make things clearer?
Other Comments		You can add additional comments on the back of this form.

Your Name

Your Title/Function

Location/Phone

Would you like us to contact you regarding your comments?

____No, there is no need to contact me

____Yes, please call me

____Yes, please email me at _____

____Yes, please contact me via _____

Return this form to: Rockwell Automation Technical Communications, 1 Allen-Bradley Dr., Mayfield Hts., OH 44124-9705

Fax: 440-646-3525 Email: RADocumentComments@ra.rockwell.com

PLEASE FASTEN HERE (DO NOT STAPLE)

Other Comments

PLEASE FOLD HERE

PLEASE REMOVE

NO POSTAGE
NECESSARY
IF MAILED
IN THE
UNITED STATES

BUSINESS REPLY MAIL

FIRST-CLASS MAIL PERMIT NO. 18235 CLEVELAND OH

POSTAGE WILL BE PAID BY THE ADDRESSEE

Rockwell Automation

1 ALLEN-BRADLEY DR
MAYFIELD HEIGHTS OH 44124-9705

www.rockwellautomation.com

Power, Control and Information Solutions Headquarters

Americas: Rockwell Automation, 1201 South Second Street, Milwaukee, WI 53204-2496 USA, Tel: (1) 414.382.2000, Fax: (1) 414.382.4444
Europe/Middle East/Africa: Rockwell Automation, Vorstlaan/Boulevard du Souverain 36, 1170 Brussels, Belgium, Tel: (32) 2 663 0600, Fax: (32) 2 663 0640
Asia Pacific: Rockwell Automation, Level 14, Core F, Cyberport 3, 100 Cyberport Road, Hong Kong, Tel: (852) 2887 4788, Fax: (852) 2508 1846

Publication 1769-UM002B-EN-P - July 2005
Supersedes Publication 1769-UM002A-EN-P - October 2000

Copyright © 2005 Rockwell Automation, Inc. All rights reserved. Printed in the U.S.A.

THIS PAGE WAS INTENTIONALLY LEFT BLANK

THIS PAGE WAS INTENTIONALLY LEFT BLANK

Installation Instructions

Allen-Bradley

Stratix 2000 Ethernet Unmanaged Switches

Catalog Numbers 1783-US03T01F, 1783-US06T01F, 1783-US05T, 1783-US08T

Topic	Page
About the Stratix 2000 Ethernet Unmanaged Switches	6
Install the Switch	10
Status Indicators	22
Specifications	24
Additional Resources	28

Important User Information

Solid-state equipment has operational characteristics differing from those of electromechanical equipment. Safety Guidelines for the Application, Installation and Maintenance of Solid State Controls (Publication SGI-1.1 available from your local Rockwell Automation sales office or online at http://www.rockwellautomation.com/literature/) describes some important differences between solid-state equipment and hard-wired electromechanical devices. Because of this difference, and also because of the wide variety of uses for solid-state equipment, all persons responsible for applying this equipment must satisfy themselves that each intended application of this equipment is acceptable.

In no event will Rockwell Automation, Inc. be responsible or liable for indirect or consequential damages resulting from the use or application of this equipment.

The examples and diagrams in this manual are included solely for illustrative purposes. Because of the many variables and requirements associated with any particular installation, Rockwell Automation, Inc. cannot assume responsibility or liability for actual use based on the examples and diagrams.

No patent liability is assumed by Rockwell Automation, Inc. with respect to use of information, circuits, equipment, or software described in this manual.

Reproduction of the contents of this manual, in whole or in part, without written permission of Rockwell Automation, Inc., is prohibited.

Throughout this manual, when necessary, we use notes to make you aware of safety considerations.

	WARNING: Identifies information about practices or circumstances that can cause an explosion in a hazardous environment, which may lead to personal injury or death, property damage, or economic loss.
	ATTENTION: Identifies information about practices or circumstances that can lead to personal injury or death, property damage, or economic loss. Attentions help you identify a hazard, avoid a hazard and recognize the consequences.
	SHOCK HAZARD: Labels may be on or inside the equipment, for example, drive or motor, to alert people that dangerous voltage may be present.
	BURN HAZARD: Labels may be on or inside the equipment, for example, drive or motor, to alert people that surfaces may reach dangerous temperatures.
IMPORTANT	Identifies information that is critical for successful application and understanding of the product.

North American Hazardous Location Approval

The following information applies when operating this equipment in hazardous locations.	**Informations sur l'utilisation de cet équipement en environnements dangereux.**
Products marked "CL I, DIV 2, GP A, B, C, D" are suitable for use in Class I Division 2 Groups A, B, C, D, Hazardous Locations and nonhazardous locations only. Each product is supplied with markings on the rating nameplate indicating the hazardous location temperature code. When combining products within a system, the most adverse temperature code (lowest "T" number) may be used to help determine the overall temperature code of the system. Combinations of equipment in your system are subject to investigation by the local Authority Having Jurisdiction at the time of installation.	Les produits marqués "CL I, DIV 2, GP A, B, C, D" ne conviennent qu'à une utilisation en environnements de Classe I Division 2 Groupes A, B, C, D dangereux et non dangereux. Chaque produit est livré avec des marquages sur sa plaque d'identification qui indiquent le code de température pour les environnements dangereux. Lorsque plusieurs produits sont combinés dans un système, le code de température le plus défavorable (code de température le plus faible) peut être utilisé pour déterminer le code de température global du système. Les combinaisons d'équipements dans le système sont sujettes à inspection par les autorités locales qualifiées au moment de l'installation.
WARNING: **Explosion Hazard -** • Do not disconnect equipment unless power has been removed or the area is known to be nonhazardous. • Do not disconnect connections to this equipment unless power has been removed or the area is known to be nonhazardous. Secure any external connections that mate to this equipment by using screws, sliding latches, threaded connectors, or other means provided with this product. • Substitution of components may impair suitability for Class I, Division 2. • If this product contains batteries, they must only be changed in an area known to be nonhazardous.	**AVERTISSEMENT:** **Risque d'Explosion –** • Couper le courant ou s'assurer que l'environnement est classé non dangereux avant de débrancher l'équipement. • Couper le courant ou s'assurer que l'environnement est classé non dangereux avant de débrancher les connecteurs. Fixer tous les connecteurs externes reliés à cet équipement à l'aide de vis, loquets coulissants, connecteurs filetés ou autres moyens fournis avec ce produit. • La substitution de composants peut rendre cet équipement inadapté à une utilisation en environnement de Classe I, Division 2. • S'assurer que l'environnement est classé non dangereux avant de changer les piles.

European Hazardous Location Approval

WARNING: This equipment is intended for use in potentially explosive atmospheres as defined by European Union Directive 94/9/EC and has been found to comply with the Essential Health and Safety Requirements relating to the design and construction of Category 3 equipment intended for use in Zone 2 potentially explosive atmospheres, given in Annex II to this Directive.

Compliance with the Essential Health and Safety Requirements has been assured by compliance with EN 60079-15 and EN 60079-0.

WARNING:

- This equipment is not resistant to sunlight or other sources of UV radiation.
- This equipment must be installed in an enclosure providing at least IP54 protection when applied in Zone 2 environments.
- This equipment shall be used within its specified ratings defined by Rockwell Automation.
- Provision shall be made to prevent the rated voltage from being exceeded by transient disturbances of more than 40% when applied in Zone 2 environments.
- Secure any external connections that mate to this equipment by using screws, sliding latches, threaded connectors, or other means provided with this product.
- Do not disconnect equipment unless power has been removed or the area is known to be nonhazardous.

Environment and Enclosure

ATTENTION: This equipment is intended for use in a Pollution Degree 2 industrial environment, in overvoltage Category II applications (as defined in IEC 60664-1), at altitudes up to 2000 m (6562 ft) without derating.

This equipment is considered Group 1, Class A industrial equipment according to IEC/CISPR 11. Without appropriate precautions, there may be difficulties with electromagnetic compatibility in residential and other environments due to conducted and radiated disturbances.

This equipment is supplied as open-type equipment. It must be mounted within an enclosure that is suitably designed for those specific environmental conditions that will be present and appropriately designed to prevent personal injury resulting from accessibility to live parts. The enclosure must have suitable flame-retardant properties to prevent or minimize the spread of flame, complying with a flame spread rating of 5VA, V2, V1, V0 (or equivalent) if non-metallic. The interior of the enclosure must be accessible only by the use of a tool. Subsequent sections of this publication may contain additional information regarding specific enclosure type ratings that are required to comply with certain product safety certifications.

In addition to this publication, see:

- Industrial Automation Wiring and Grounding Guidelines, Rockwell Automation publication 1770-4.1, for additional installation requirements.
- NEMA Standard 250 and IEC 60529, as applicable, for explanations of the degrees of protection provided by different types of enclosure.

Prevent Electrostatic Discharge

ATTENTION: This equipment is sensitive to electrostatic discharge, which can cause internal damage and affect normal operation. Follow these guidelines when you handle this equipment:

- Touch a grounded object to discharge potential static.
- Wear an approved grounding wriststrap.
- Do not touch connectors or pins on component boards.
- Do not touch circuit components inside the equipment.
- Use a static-safe workstation, if available.
- Store the equipment in appropriate static-safe packaging when not in use.

About the Stratix 2000 Ethernet Unmanaged Switches

The Ethernet unmanaged switches can be used to divide an Ethernet network into segments, and to direct network traffic more efficiently than using repeating hubs. This allows for a larger network size, regardless of the amount of network traffic.

Connecting one of the switches' ports to a single device segments the network, letting you dedicate bandwidth to that device. Unmanaged switches also enable multiple simultaneous communication between devices on different ports.

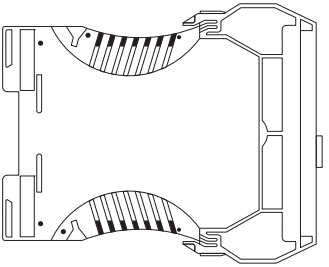

The switches are available in the following port configurations for attaching local devices.

Cat. No.	Port Configuration
1783-US03T01F	3-port copper 1-port fiber
1783-US05T	5-port copper
1783-US06T01F	6-port copper 1-port fiber
1783-US08T	8-port copper

The 3-port copper 1-port fiber switch (catalog number 1783-US03T01F) is shown in this publication.

The individual ports autonegotiate link speeds (10 Mbps or 100 Mbps). To improve data throughput, traffic is restricted to ports in a data exchange, while other data is simultaneously exchanged on other ports.

IMPORTANT The device you connect to a switch should have its Ethernet port configured for autonegotiate to avoid confusion between half- and full-duplex communication. You can also set the device's Ethernet port to half-duplex. Failure to do so may result in higher error rates.

In addition to a power status indicator, each port has these indicators.

- Each copper port has two link/status/activity indicators (only one of which is active at a time).
- The fiber optic port has one link/status/activity indicator.

When this indicator is lit	Link speed is
Amber (copper port only)	10 Mbps
Green	100 Mbps

The switches operate on low-voltage AC or DC power.

Features supported by the Ethernet unmanaged switches include the following:

- 10 Mbps or 100 Mbps, full- or half-duplex communication, per copper port autonegotiation
- Automatic crossover detection (auto MDIX)
- LC-type fiber optic connector; multimode cable

Use Caution When Handling Switches with Fiber Optic Ports

Observe the following when using the unmanaged switches equipped with fiber optic ports (catalog numbers 1783-US03T01F and 1783-US06T01F).

ATTENTION: Do not look into the optical port. Under certain conditions, viewing the optical port may expose the eye to hazards. When viewed under some conditions, the optical port may expose the eye beyond the maximum permissible exposure recommendations.

Required Tools

You need these tools to install the switch.

Item	Description
Screwdriver	6 mm (0.25 in.) width blade
	3 mm (0.12 in.) width blade, for use with electrical connector

Required System Components

The switches require either of these types of power supplies:

- 24V DC rated voltage (10...35V DC; maximum 4 W power consumption)
- 20V AC rated voltage (10...24V AC; maximum 6VA power consumption)

ATTENTION: To comply with the CE Low-voltge Directive (LVD), this equipment must be powered from a source compliant with Safety Extra Low-voltge (SELV) or Protected Extra Low Voltage (PELV).

To comply with UL restrictions, this equipment must be powered from a source compliant with Class 2.

See the procedure on page 13 to wire the switch.

Install the Switch

Follow these procedures to install the switch.

WARNING: An electrical arc can occur:

- if you connect or disconnect the communication cable with power applied to this module or any device on the network.
- if you connect or disconnect wiring while the field-side power is on

This can cause an explosion in hazardous location installations. Be sure that power is removed or the area is nonhazardous before proceeding.

Mount the Switch

Mount the switch vertically on a horizontal DIN rail, either free-standing or at the rear of the control cabinet. You can mount the switch adjacent to another Stratix 2000 switch.

ATTENTION: Failure to mount the switches vertically on a horizontal DIN rail may result in overheating and switch failure.

Make sure that the switch is oriented so that the ports face forward. The Power status indicator should be oriented to the right. See the illustrations on page 12.

ATTENTION: Maintain 50 mm (2 in.) of space on the right and left sides, and the top and bottom of the switch from enclosure walls, wireways, and adjacent equipment, for ventilation and electrical isolation.

Follow these steps to mount the switch on a DIN rail.

1. Use the 6 mm (0.25 in.) screwdriver to open the latch at either the top or bottom of the switch.
2. Hold the latch open and hook the latch over the DIN rail.
3. Remove the screwdriver and allow the latch to close.

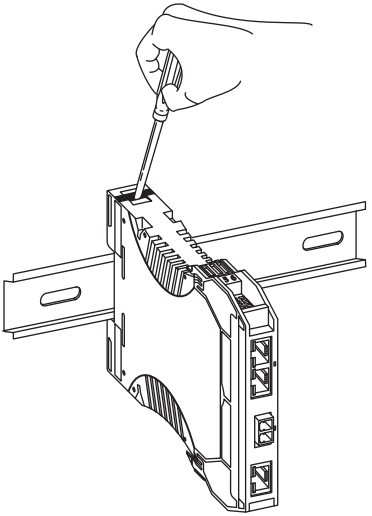

31746-M

Product Dimensions

The following illustrations show the switch dimensions.

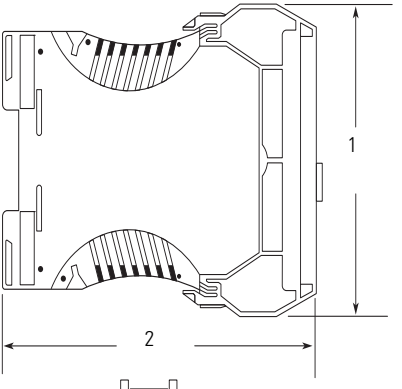

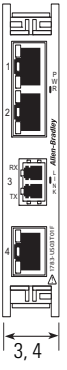

Item	Description	Item	Description
1	108 mm (4.25 in.)	3	22.5 mm (0.89 in.)
2	127.8 mm (5.03 in.)	4	Other versions of the switch (not shown here, catalog numbers 1783-US06T01F and 1783-US08T) are 45 mm (1.77 in.) wide

Wire the Switch

ATTENTION: To comply with the CE Low Voltage Directive (LVD), this equipment must be powered from a source compliant with Safety Extra Low-voltage (SELV) or Protected Extra Low Voltage (PELV).

To comply with UL restrictions, this equipment must be powered from a source compliant with Class 2.

Provide low-voltge AC or DC power to the switch by using the screw terminals at the top and bottom of the switch. The AC connector is at the top of the switch. The DC connector is at the bottom of the switch.

Wire the Switch for AC Operation

This table shows pinouts for the low-voltge AC power supply cable.

Terminal	Designation
4	(Ground) functional earth ground Terminal 1 of the DC connector may be used in place of terminal 4 of the AC connector
5	~ 20 (20V AC nom)
6	~ 20 (20V AC nom)

Follow these steps to wire the switch.

1. Make sure that power to the power supply is turned off.
2. Make sure you have the proper gauge of wire for your power supply.

   Minimum wire gauge is 1.5 mm^2 (16 AWG).

3. Strip approximately 9 mm (0.35 in.) from each end of the wire.
4. If the connector is already installed in the switch (at the top of the switch; see item 1), use a screwdriver to gently pry the connector from the switch.

5. If the connector is not already installed in the switch, wire the connector before replacing it in the switch.

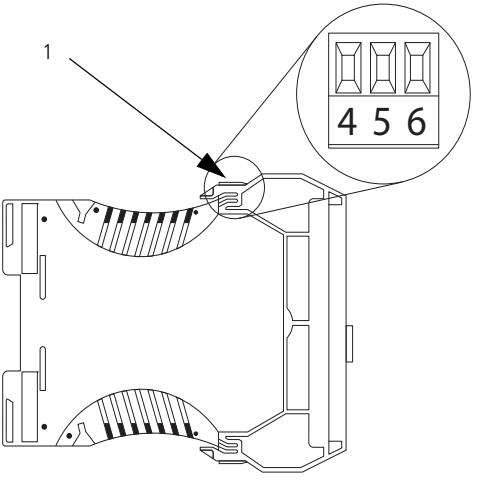

31749-M

Item	Description
1	Screw terminal connection from low-voltge AC power supply to switch

6. Use the 3 mm (0.12 in.) screwdriver to loosen the screw terminals on the connector.
7. Connect one AC output (20V AC nominal) from the low-voltge AC power supply to terminal 5 (~20) and tighten the screw.
8. Connect the other AC output (20V AC nominal) from the low-voltge AC power supply to terminal 6 (~20) and tighten the screw.

9. Connect functional earth ground to terminal 4 and tighten the screw.

IMPORTANT Maximum recommended torque for all screw connections is 0.8 N•m (7 lb•in) .

Refer to the grounding considerations on page 20.

10. Plug the connector into the switch.
11. Tug gently on the wires to make sure the connections are secure.

Wire the Switch for DC Operation

This table shows pinouts for the DC power supply cable.

Terminal	Designation
1	Ground (functional earth ground) Terminal 4 of the AC connector may be used in place of terminal 1 of the DC connector
2	DC+ (24V DC nom)
3	DC- (0V DC)

1. Make sure that power to the power supply is turned off.
2. Make sure you have the proper gauge of wire for your power supply.

   Minimum wire gauge is 1.5 mm^2 (16 AWG).

3. Strip approximately 9 mm (0.35 in.) from each end of the wire.
4. If the connector is already installed in the switch, use a screwdriver to gently pry the connector from the switch.

If the connector is not already installed in the switch (at the bottom of the switch; see item 1 below), wire the connector before replacing it in the switch.

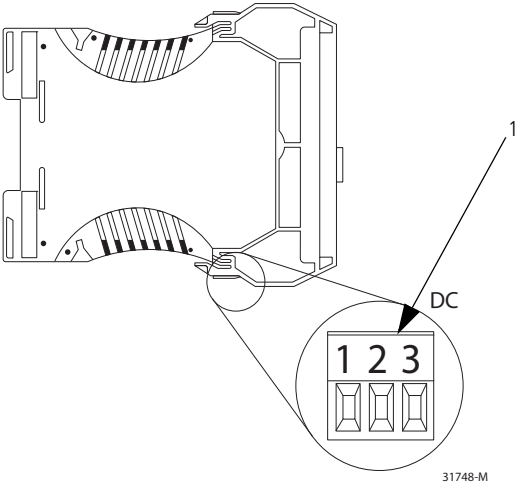

Item	Description
1	Screw terminal connection from DC power supply to switch

5. Use the 3 mm (0.12 in.) screwdriver to loosen the screw terminals on the connector.
6. Connect DC+ (24V DC nominal) from the power supply to terminal 2 and tighten the screw.
7. Connect DC- (0V DC) from the power supply to terminal 3 and tighten the screw.
8. Connect functional earth ground to terminal 1 and tighten the screw.

IMPORTANT Maximum recommended torque for all screw connections is 0.8 N•m (7 lb•in).

Refer to the grounding considerations on page 20.

9. Plug the connector into the switch.
10. Tug gently on the wires to be sure the connections are secure.

Connect the Copper Ethernet Ports

Follow these steps to connect the copper Ethernet ports on the switch.

1. Locate the copper Ethernet RJ45 ports on the front of the switch.

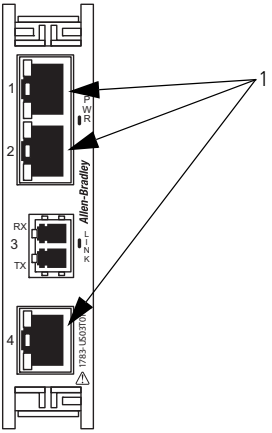

Item	Description
1	Copper Ethernet ports

2. Connect one end of an Ethernet cable to one of the copper ports on the front panel of the switch.
3. Connect the other end of the Ethernet cable to a device in your Ethernet network.

Connect the Fiber Optic Ethernet Port

Follow these steps to connect the fiber-optic Ethernet port on the switch.

ATTENTION: Do not look into the optical port. Under certain conditions, viewing the optical port may expose the eye to hazards. When viewed under some conditions, the optical port may expose the eye beyond the maximum permissible exposure recommendations.

TIP For fiber optic specifications, see page 24.

1. Locate the fiber-optic Ethernet port on the front of the switch.

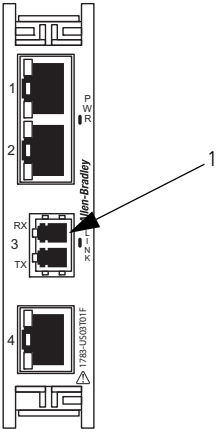

Item	Description
1	Fiber optic Ethernet ports

2. Connect the duplex LC-connector end of the fiber optic cable to the fiber-optic Ethernet port.
3. Connect the other end of the cable to a device in your network, or to another switch if connecting switches together.

Grounding Considerations

ATTENTION: For proper grounding, you must always connect the power supply functional-ground screw when connecting the power supply. You must provide an acceptable grounding path for each device in your application. For more information on proper grounding guidelines, refer to Industrial Automation Wiring and Grounding Guidelines, publication 1770-4.1.

This product is intended to be mounted to a well-grounded mounting surface, such as a metal panel. The functional-earth ground connection to the product is through the specified pin on the AC and DC connection terminals.

IMPORTANT Only one of these ground connections is required.

- Pin 1 on the DC connection terminals
- Pin 4 on the AC connection terminals

Connect the functional earth (FE) ground to the ground pin of either the DC (pin 1) or AC (pin 4) power connector on one of the connectors at the top and bottom of the switch.

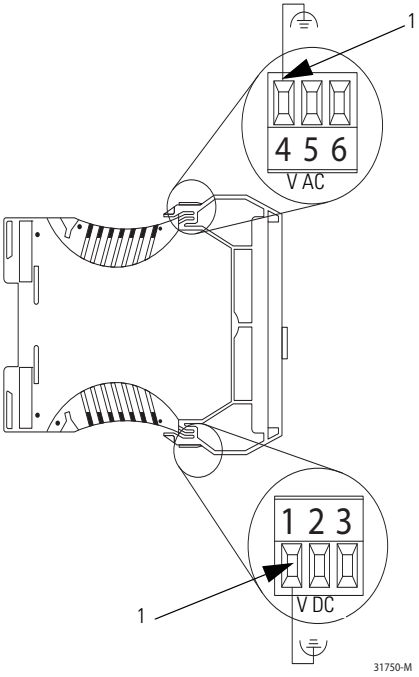

Item	Description
1	Connect the functional earth (FE) ground to the ground pin of either the DC (pin 1) or AC (pin 4) connector

Refer to Industrial Automation Wiring and Grounding Guidelines, publication 1770-4.1, f or additional information.

Status Indicators

To aid in troubleshooting, the switch contains these indicators:

- A power indicator labeled PWR
- Two-link status indicators on each copper Ethernet port (on the RJ45 connector)

  These indicators are not labeled on the switch faceplate.

Switches with a fiber-optic Ethernet port have an additional Ethernet link-status indicator labeled LINK.

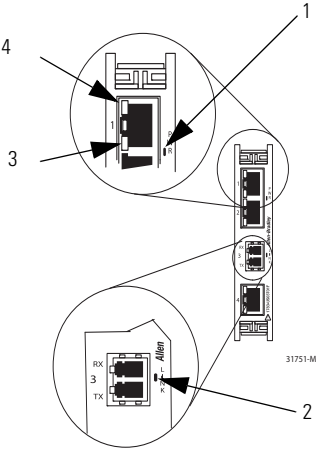

Item	Description	Item	Description
1	PWR status indicator	3	Lower-copper port status indicator (green)
2	Fiber optic Ethernet port LINK status indicator	4	Upper-copper port status indicator (amber)

Status Indicators

Indicator	Status	Description
PWR	Solid green	The switch is powered
Upper copper port status indicator only	Solid amber	10 Mbps Ethernet link
	Flashing amber	There is activity on the 10 Mbps Ethernet link connected to this copper port
Lower copper port status indicator only	Solid green	100 Mbps Ethernet link
	Flashing green	There is activity on the 100 Mbps Ethernet link connected to this copper port
LINK	Solid green	An Ethernet link exists on the fiber optic port
	Flashing green	There is activity on the Ethernet link on the fiber optic port

Specifications

Technical Specifications - Stratix 2000 Switches

Attribute	1783-US03T01F, 1783-US06T01F, 1783-US05T, 1783-US08T
Enclosure type rating	Meets IP20
Inrush current, max	2.2 A
AC power-supply voltage rating	20V AC (10…24V AC)
DC power-supply voltage rating	24V DC (10…35V DC)
Isolation voltage	30V (continuous), Basic Insulation Type, between communication ports and power ports No isolation between individual communication ports Type tested at 500V AC for 60 s
Power consumption, max	4 W (6VA) Current 400 mA at 10V DC max
Wire size	Communication connectors: RJ45 connector according to IEC 60603-7, 2 or 4 pair Category 5e min cable according to TIA 568-B.1 or Category 5 cable according to ISO/IEC 24702 Power connectors: 1.5…2.5 mm^2 (16...14 AWG) solid or stranded copper wire rated at 75 °C (167 °F) or greater 1.2 mm (3/64 in.) insulation max
Torque, max recommended	0.8 N•m (7 lb•in) on power connectors
Fiber-optic Ethernet data rate	100 Mbps
Fiber-optic connecting mode	Full duplex
Fiber-optic wavelength	1310 nm
Fiber-optic cable length, max	Graded index multimode fiber; 2000 m (6562 ft)
Fiber-optic link budget	8 dB with 62.5 / 125 µm multimode cable 4 dB with 50 / 125 µm multimode cable
Fiber-optic connector type	LC

Technical Specifications - Stratix 2000 Switches

Attribute	1783-US03T01F, 1783-US06T01F, 1783-US05T, 1783-US08T
Wiring category(1)	2 - on power ports 2 - on communication ports
North American temp code	T4
IEC temp code	T4

(1) Use this Conductor Category information for planning conductor routing. Refer to Industrial Automation Wiring and Grounding Guidelines, publication 1770-4.1.

Environmental Specifications - Stratix 2000 Switches

Attribute	1783-US03T01F, 1783-US06T01F, 1783-US05T, 1783-US08T
Temperature, operating • IEC 60068-2-1 (Test Ad, Operating Cold) • IEC 60068-2-2 (Test Bd, Operating Dry Heat) • IEC 60068-2-14 (Test Nb, Operating Thermal Shock)	0…60 °C (32…140 °F)
Temperature, nonoperating • IEC 60068-2-1 (Test Ab, Unpackaged Nonoperating Cold) • IEC 60068-2-2 (Test Bb, Unpackaged Nonoperating Dry Heat) • IEC 60068-2-14 (Test Na, Unpackaged Nonoperating Thermal Shock)	-40…85 °C (-40…185 °F)
Relative humidity • IEC 60068-2-30 (Test Db, Unpackaged Damp Heat)	5…95% noncondensing
Vibration • IEC 60068-2-6 (Test Fc, Operating)	2 g @ 10…500 Hz

Environmental Specifications - Stratix 2000 Switches

Attribute	1783-US03T01F, 1783-US06T01F, 1783-US05T, 1783-US08T
Operating shock • IEC 60068-2-27 (Test Ea, Unpackaged Shock)	15 g
Nonoperating shock • IEC 60068-2-27 (Test Ea, Unpackaged Shock)	30 g
Emissions • CISPR 11	Group 1, Class A
ESD immunity • IEC 61000-4-2	**1783-US06T01F:** 4 kV contact discharges 8 kV air discharges **1783-US03T01F, 1783-US05T, 1783-US08T:** 6 kV contact discharges 8 kV air discharges
Radiated RF immunity • IEC 61000-4-3	10V/m with 1 kHz sine-wave 80% AM from 80…2000 MHz 10V/m with 200 Hz 50% Pulse 100% AM at 900 MHz 10V/m with 200 Hz 50% Pulse 100% AM at 1890 MHz 1V/m with 1 kHz sine-wave 80% AM from 2000…2700 MHz
EFT/B immunity • IEC 61000-4-4	±2 kV at 5 kHz on power ports ±2 kV at 5 kHz on communication ports
Surge transient immunity • IEC 61000-4-5	±1 kV line-line(DM) and ±2 kV line-earth(CM) on power ports ±2 kV line-earth(CM) on communication ports
Conducted RF immunity • IEC 61000-4-6	10V rms with 1 kHz sine-wave 80% AM from 150 kHz…80 MHz

Certifications - Stratix 2000 Switches

Certifications (when product is marked)[1]	1783-US03T01F, 1783-US06T01F, 1783-US05T, 1783-US08T
c-UL-us	• UL Listed Industrial Control Equipment, certified for US and Canada. See UL File E65584. • UL Listed for Class I, Division 2 Group A,B,C,D Hazardous Locations, certified for U.S. and Canada. See UL File E194810.
CE	European Union 2004/108/EC EMC Directive, compliant with: • EN 61326-1; Meas./Control/Lab., Industrial Requirements • EN 61000-6-2; Industrial Immunity • EN 61000-6-4; Industrial Emissions • EN 61131-2; Programmable Controllers (Clause 8, Zone A & B)
C-Tick	Australian Radiocommunications Act, compliant with: • AS/NZS CISPR 11; Industrial Emissions
Ex	European Union 94/9/EC ATEX Directive, compliant with: • EN 60079-15; Potentially Explosive Atmospheres, Protection “n” • EN 60079-0; General Requirements • II 3 G Ex nA II T4 X

(1) See the Product Certification link at http://www.ab.com for Declarations of Conformity, Certificates, and other certification details.

Additional Resources

These documents contain additional information concerning related Rockwell Automation products.

Resource	Description
EtherNet/IP Industrial Protocol White Paper, publication ENET-WP001A	Describes how to implement services and data objects on a TCP/UDP/IP based Ethernet network.
Industrial Automation Wiring and Grounding Guidelines, publication 1770-4.1	Provides general guidelines for installing a Rockwell Automation industrial system.
Product Certifications website, http://www.ab.com	Provides declarations of conformity, certificates, and other certification details.

You can view or download publications at http://www.rockwellautomation.com/literature. To order paper copies of technical documentation, contact your local Rockwell Automation distributor or sales representative.

Allen-Bradley, Rockwell Software, Rockwell Automation, and Stratix 2000 are trademarks of Rockwell Automation, Inc.

Trademarks not belonging to Rockwell Automation are property of their respective companies.

Rockwell Otomasyon Ticaret A.Ş., Kar Plaza İş Merkezi E Blok Kat:6 34752 İçerenköy, İstanbul, Tel: +90 (216) 5698400

www.rockwellautomation.com

Power, Control and Information Solutions Headquarters

Americas: Rockwell Automation, 1201 South Second Street, Milwaukee, WI 53204-2496 USA, Tel: (1) 414.382.2000, Fax: (1) 414.382.4444
Europe/Middle East/Africa: Rockwell Automation NV, Pegasus Park, De Kleetlaan 12a, 1831 Diegem, Belgium, Tel: (32) 2 663 0600, Fax: (32) 2 663 0640
Asia Pacific: Rockwell Automation, Level 14, Core F, Cyberport 3, 100 Cyberport Road, Hong Kong, Tel: (852) 2887 4788, Fax: (852) 2508 1846

Publication 1783-IN001D-EN-P - January 2011 PN-100458

Supersedes Publication 1783-IN001C-EN-P - July 2010 Copyright © 2011 Rockwell Automation, Inc. All rights reserved. Printed in the U.S.A.

THIS PAGE WAS INTENTIONALLY LEFT BLANK

THIS PAGE WAS INTENTIONALLY LEFT BLANK

Allen-Bradley

Compact I/O Analog Modules

1769-IF4, -IF8, -OF2, -OF8C, and -OF8V

User Manual

Rockwell Automation

Important User Information

Solid state equipment has operational characteristics differing from those of electromechanical equipment. *Safety Guidelines for the Application, Installation and Maintenance of Solid State Controls* (Publication SGI-1.1 available from your local Rockwell Automation sales office or online at http://www.ab.com/manuals/gi) describes some important differences between solid state equipment and hard-wired electromechanical devices. Because of this difference, and also because of the wide variety of uses for solid state equipment, all persons responsible for applying this equipment must satisfy themselves that each intended application of this equipment is acceptable.

In no event will Rockwell Automation, Inc. be responsible or liable for indirect or consequential damages resulting from the use or application of this equipment.

The examples and diagrams in this manual are included solely for illustrative purposes. Because of the many variables and requirements associated with any particular installation, Rockwell Automation, Inc. cannot assume responsibility or liability for actual use based on the examples and diagrams.

No patent liability is assumed by Rockwell Automation, Inc. with respect to use of information, circuits, equipment, or software described in this manual.

Reproduction of the contents of this manual, in whole or in part, without written permission of Rockwell Automation, Inc. is prohibited.

Throughout this manual we use notes to make you aware of safety considerations.

WARNING

Identifies information about practices or circumstances that can cause an explosion in a hazardous environment, which may lead to personal injury or death, property damage, or economic loss.

IMPORTANT

Identifies information that is critical for successful application and understanding of the product.

ATTENTION

Identifies information about practices or circumstances that can lead to personal injury or death, property damage, or economic loss. Attentions help you:

- identify a hazard
- avoid a hazard
- recognize the consequence

SHOCK HAZARD

Labels may be located on or inside the drive to alert people that dangerous voltage may be present.

BURN HAZARD

Labels may be located on or inside the drive to alert people that surfaces may be dangerous temperatures.

The 1769-IF8, -OF8C, and -OF8V modules have been added to this manual since the last printing.

To help you find new and updated information in this release of the manual, we have included change bars as shown next to this paragraph.

Notes:

Preface

Who Should Use This Manual Preface-1
How to Use This Manual Preface-1
Manual Contents Preface-1
Related Documentation Preface-2
Conventions Used in This Manual Preface-2
Rockwell Automation Support Preface-3
Local Product Support Preface-3
Technical Product Assistance Preface-3
Your Questions or Comments on the Manual Preface-3

Chapter 1

Overview

How to Use Analog I/O 1-1
General Description 1-2
Hardware Features 1-3
General Diagnostic Features 1-5
System Overview 1-5
System Operation 1-6
Module Operation 1-7
Module Field Calibration 1-10

Chapter 2

Installation and Wiring

Compliance to European Union Directives 2-1
EMC Directive 2-1
Low Voltage Directive 2-1
Power Requirements 2-2
General Considerations 2-2
Hazardous Location Considerations 2-3
Prevent Electrostatic Discharge 2-3
Remove Power 2-4
Reducing Noise 2-4
Protecting the Circuit Board from Contamination 2-4
System Assembly 2-4
Mounting 2-6
Minimum Spacing 2-6
Panel Mounting 2-7
DIN Rail Mounting 2-8
Replacing a Single Module within a System 2-9
External Power Switch 2-10

Field Wiring Connections 2-10
Grounding 2-10
System Wiring Guidelines 2-11
Labeling the Terminals 2-15
Removing the Finger-Safe Terminal Block 2-15
Wiring the Finger-Safe Terminal Block 2-16
Wiring the Modules 2-17
Terminal Door Label 2-18
Analog Input Modules Wiring. 2-19
Analog Output Modules Wiring 2-24

Chapter 3

Module Data, Status, and Channel Configuration for the Input Modules

1769-IF4 Input Module Addressing 3-1
1769-IF4 Input Image 3-2
1769-IF4 Configuration File 3-2
1769-IF4 Input Data File. 3-2
1769-IF4 Input Data Values 3-3
1769-IF4 Configuration Data File. 3-4
Channel Configuration 3-5
Enable/Disable Channel 3-6
Input Filter Selection 3-6
Input Type/Range Selection 3-9
Input Data Selection Formats 3-10
Effective Resolution 3-13
1769-IF8 Input Module Addressing 3-16
1769-IF8 Input Image 3-17
1769-IF8 Output Image. 3-17
1769-IF8 Configuration File 3-17
1769-IF8 Input Data File. 3-18
1769-IF8 Input Data Values 3-18
1769-IF8 Output Data File 3-20
1769-IF8 Configuration Data File. 3-20
Channel Configuration 3-22
Enable/Disable Channel 3-23
Input Filter Selection 3-23
Input Type/Range Selection 3-27
Input Data Selection Formats 3-27
1769-IF8 Real Time Sampling. 3-29
1769-IF8 Process Alarms 3-30

Chapter 4

Module Data, Status, and Channel Configuration for the Output Modules

1769-OF2 Output Module Memory Map 4-1
1769-OF2 Output Data File 4-2
1769-OF2 Input Data File 4-2
1769-OF2 Diagnostic Bits (D0 and D1) 4-2
1769-OF2 Hold Last State Bits (H0 and H1) 4-2
1769-OF2 Over-Range Flag Bits (O0 and O1) 4-3
1769-OF2 Under-Range Flag Bits (U0 and U1) 4-3
1769-OF2 General Status Bits (S0 and S1) 4-3
1769-OF2 Output Data Loopback/Echo 4-4
1769-OF2 Configuration Data File 4-5
1769-OF2 Channel Configuration 4-6
1769-OF2 Enable/Disable Channel 4-7
1769-OF2 Output Data Format Selection 4-7
1769-OF2 Output Type/Range Selection 4-8
1769-OF2 Fault Mode (FM0 and FM1) 4-8
1769-OF2 Program/Idle Mode (PM0 and PM1) 4-9
1769-OF2 Program/Idle to Fault Enable (PFE0 and PFE1) . . 4-10
1769-OF2 Fault Value (Channel 0 and 1) 4-11
1769-OF2 Program/Idle Value (Channel 0 and 1) 4-11
1769-OF2 Module Resolution 4-15
1769-OF8C Output Module Memory Map 4-16
1769-OF8V Output Module Memory Map 4-17
1769-OF8C and -OF8V Output Data File 4-18
Channel Alarm Unlatch 4-18
1769-OF8C and -OF8V Input Data File 4-19
1769-OF8C and -OF8V Data Values 4-19
1769-OF8C and -OF8V Output Data Loopback/Echo 4-21
1769-OF8C and -OF8V Configuration Data File 4-22
1769-OF8C and -OF8V Channel Configuration 4-24
1769-OF8C and -OF8V Enable/Disable Channel 4-25
Clamping/Limiting 4-25
Clamp/Limit Alarms 4-26
Ramping 4-26
Hold for Initialization 4-28
Open Wire Detection (1769-OF8C Only) 4-29
1769-OF8C and -OF8V Fault Mode (FM) 4-29
1769-OF8C and -OF8V Program/Idle Mode (PM) 4-30
1769-OF8C and -OF8V Program/Idle to Fault Enable (PFE). 4-31
1769-OF8C and -OF8V Fault Value 4-31
1769-OF8C and -OF8V Program/Idle Value 4-32

Module Diagnostics and Troubleshooting

Chapter 5

Safety Considerations 5-1
Indicator Lights 5-1
Activating Devices When Troubleshooting 5-1
Stand Clear of the Machine 5-2
Program Alteration 5-2
Safety Circuits. 5-2
Module Operation vs. Channel Operation 5-2
Power-up Diagnostics 5-3
Channel Diagnostics. 5-3
Out-of-Range Detection (Input and Output Modules) 5-3
Open-Circuit Detection (Input Modules Only) 5-3
Output Wire Broken/High Load Resistance (Output Modules Only) 5-4
Non-critical vs. Critical Module Errors. 5-4
Module Error Definition Table 5-4
Module Error Field 5-5
Extended Error Information Field 5-5
Error Codes 5-6
Module Inhibit Function 5-12
Contacting Rockwell Automation 5-12

Specifications

Appendix A

General Specifications for 1769-IF4, -IF8, -OF2, -OF8C, and -OF8V Modules A-1
1769-IF4 Input Specifications A-3
1769-IF8 Input Specifications A-5
1769-OF2 Output Specifications. A-7
1769-OF8C Output Specifications A-9
1769-OF8V Output Specifications A-11

Module Addressing and Configuration with MicroLogix 1500

Appendix B

Input Module Addressing B-1
Input Modules Input Image B-2
Input Modules' Configuration File B-3
Configuring Analog I/O Modules in a MicroLogix 1500 System . . . B-4
Configuring the Input Modules. B-6
Configuring the Output Modules B-7

Configuration Using the RSLogix 5000 Generic Profile for CompactLogix Controllers

Appendix C

Configuring I/O Modules C-6
Configuring Analog Output Modules. C-7
Configuring Analog Input Modules C-7

Appendix D

Configuring Modules in a Remote DeviceNet System with a 1769-ADN DeviceNet Adapter

Overview. D-1
Add the DeviceNet Adapter to the Scanlist D-2
Configure the 1769-IF4 Input Module Example D-4
1769-IF4 Example of External Power D-6
Configure the 1769-OF8C Output Module Example D-7
1769-OF8C Example of External Power D-8
1769-OF8C Example of Output Channels. D-9

Appendix E

Two's Complement Binary Numbers

Positive Decimal Values. E-1
Negative Decimal Values E-2

Glossary

Read this preface to familiarize yourself with the rest of the manual. This preface covers the following topics:

- who should use this manual
- how to use this manual
- related publications
- conventions used in this manual
- Rockwell Automation support

Who Should Use This Manual

Use this manual if you are responsible for designing, installing, programming, or troubleshooting control systems that use Allen-Bradley Compact™ I/O.

How to Use This Manual

As much as possible, we organized this manual to explain, in a task-by-task manner, how to install, configure, program, operate and troubleshoot a control system using the 1769 analog I/O modules.

Manual Contents

If you want...	See
An overview of the analog input and output modules	Chapter 1
Installation and wiring guidelines	Chapter 2
Input module addressing, configuration and status information	Chapter 3
Output module addressing, configuration and status information	Chapter 4
Information on module diagnostics and troubleshooting	Chapter 5
Specifications for the input and output modules	Appendix A
Information on addressing and configuration using MicroLogix 1500 and RSLogix 500	Appendix B
Information on configuring the module using CompactLogix and RSLogix 5000	Appendix C
Information on configuring the module using 1769-ADN DeviceNet Adapter and RSNetWorx	Appendix D
Information on understanding two's complement binary numbers	Appendix E
Definitions of terms used in this manual	Glossary

Related Documentation

The table below provides a listing of publications that contain important information about MicroLogix 1500 systems.

For	Read this document	Document number
A user manual containing information on how to install, use and program your MicroLogix 1500 controller.	MicroLogix™ 1500 User Manual	1764-UM001
A user manual containing information on how to install, and use your 1769-ADN DeviceNet Adapter.	DeviceNet Adapter User Manual	1769-UM001
A user manual containing information on how to install, use and program your CompactLogix controller.	CompactLogix User Manual	1769-UM007
An overview of 1769 Compact Discrete I/O modules	1769 Compact Discrete Input/Output Modules Product Data	1769-2.1
An overview of the MicroLogix 1500 System, including 1769 Compact I/O.	MicroLogix™ 1500 System Overview	1764-SO001
In-depth information on grounding and wiring Allen-Bradley programmable controllers.	Allen-Bradley Programmable Controller Grounding and Wiring Guidelines	1770-4.1

If you would like a manual, you can:

- download a free electronic version from the internet at **www.ab.com/literature**
- purchase a printed manual by:
  - contacting your local distributor or Rockwell Automation representative
  - calling 1.800.963.9548 (USA/Canada) or 001.330.725.1574 (Outside USA/Canada)

Conventions Used in This Manual

The following conventions are used throughout this manual:

- Bulleted lists (like this one) provide information not procedural steps.
- Numbered lists provide sequential steps or hierarchical information.
- *Italic* type is used for emphasis.
- Text in this `font` indicates words or phrases you should type.

Rockwell Automation Support

Rockwell Automation offers support services worldwide, with over 75 Sales/Support Offices, 512 authorized distributors and 260 authorized Systems Integrators located throughout the United States alone, plus Rockwell Automation representatives in every major country in the world.

Local Product Support

Contact your local Rockwell Automation representative for:

- sales and order support
- product technical training
- warranty support
- support service agreement

Technical Product Assistance

If you need to contact Rockwell Automation for technical assistance, please review the information in Chapter 5, *Module Diagnostics and Troubleshooting* first. Then call your local Rockwell Automation representative.

Your Questions or Comments on the Manual

If you find a problem with this manual, please notify us. If you have any suggestions for how this manual could be made more useful to you, please contact us at the address below:

Rockwell Automation
Automation Control and Information Group
Technical Communication, Dept. A602V
P.O. Box 2086
Milwaukee, WI 53201-2086

Notes:

Overview

This chapter explains how analog data is used, and describes the 1769-IF4 and -IF8 analog input modules and the 1769-OF2, -OF8C, and -OF8V analog output modules. Included is information about:

- the use of analog I/O
- the modules' hardware and diagnostic features
- an overview of the 1769 analog input system operation
- an overview of the 1769 analog output system operation

How to Use Analog I/O

Analog refers to the representation of numerical quantities by the measurement of continuous physical variables. Analog applications are present in many forms. The following application shows a typical use of analog data.

In this application, the processor controls the amount of fluid in a holding tank by adjusting the valve opening. The valve is initially open 100%. As the fluid level in the tank approaches the preset point, the processor modifies the output to close the valve 90%, 80%, and so on, continuously adjusting the valve to maintain the fluid level.

Figure 1.1 Analog I/O Application Example

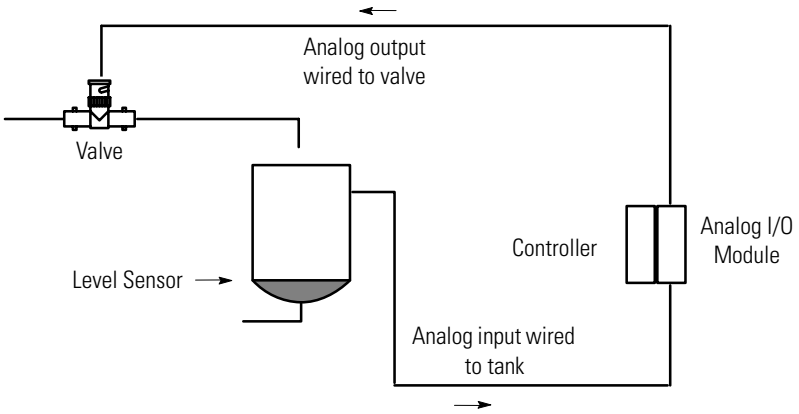

General Description

The 1769-IF4 and -IF8 analog input modules convert and digitally store analog data for retrieval by controllers, such as the CompactLogix™ or MicroLogix™ 1500. The module supports connections from any combination of up to four voltage or current analog sensors for the 1769-IF4 and up to eight for the 1769-IF8. The high-impedance input channels can be wired as either single-ended or differential inputs.

The 1769-OF2 output module provides two single-ended analog output channels, each individually configurable for voltage or current. The 1769-OF8C and -OF8V output modules each provide eight single-ended analog output channels.

Both modules provide the following input/output types/ranges:

Table 1.1 Normal and Full Ranges

Normal Operating Input Range	Full Module Range
±10V dc	± 10.5V dc
1 to 5V dc	0.5 - 5.25V dc
0 to 5V dc	-0.5 - +5.25V dc
0 to 10V dc	-0.5 - +10.5V dc
0 to 20 mA	0 - 21 mA
4 to 20 mA	3.2 - 21 mA

The data can be configured on board each module as:

- Engineering Units
- Scaled-for-PID
- Percent
- Raw/Proportional Data

Hardware Features

The modules contain removable terminal blocks. The 1769-IF4 and -IF8 channels can be wired as either single-ended or differential inputs. The 1769-OF2, -OF8C, and -OF8V channels are single-ended only. Module configuration is normally done via the controller's programming software. In addition, some controllers support configuration via the user program. In either case, the module configuration is stored in the memory of the controller. Refer to your controller's user manual for more information.

Figure 1.2 1769-OF2, -OF8C, -OF8V and -IF4 Analog Module's Hardware Features

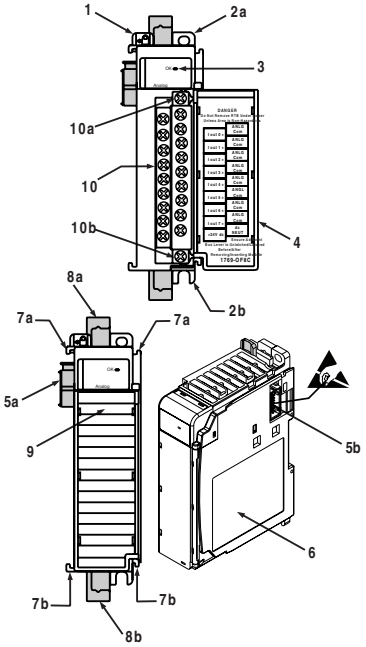

Table 1.2 1769-OF2, -OF8C, -OF8V, and -IF4 Feature Descriptions

Item	Description
1	bus lever (with locking function)
2a	upper panel mounting tab
2b	lower panel mounting tab
3	module status LEDs
4	module door with terminal identification label
5a	movable bus connector with female pins
5b	stationary bus connector with male pins
6	nameplate label
7a	upper tongue-and-groove slots
7b	lower tongue-and-groove slots
8a	upper DIN rail latch
8b	lower DIN rail latch
9	write-on label for user identification tags
10	removable terminal block (RTB) with finger-safe cover
10a	RTB upper retaining screw
10b	RTB lower retaining screw

Figure 1.3 1769-IF8 Analog Module's Hardware Features

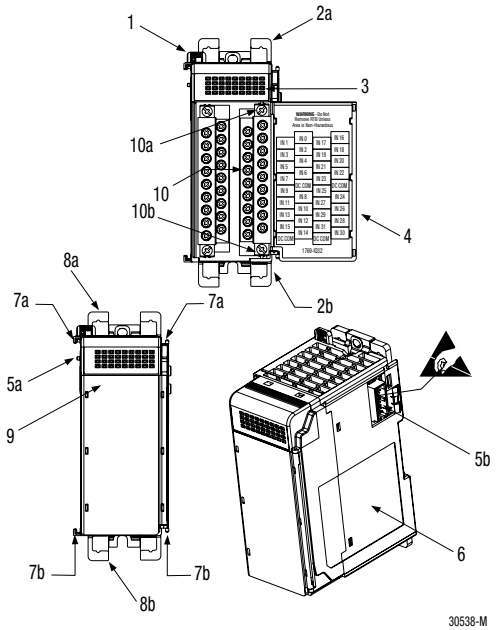

Table 1.3 1769-IF8 Feature Descriptions

Item	Description
1	bus lever (with locking function)
2a	upper panel mounting tab
2b	lower panel mounting tab
3	I/O diagnostic LEDs
4	module door with terminal identification label
5a	movable bus connector with female pins
5b	stationary bus connector with male pins
6	nameplate label
7a	upper tongue-and-groove slots
7b	lower tongue-and-groove slots
8a	upper DIN rail latch
8b	lower DIN rail latch
9	write-on label for user identification tags
10	removable terminal block (RTB) with finger-safe cover
10a	RTB upper retaining screw
10b	RTB lower retaining screw

General Diagnostic Features

The analog modules contain diagnostic features that can help you identify the source of problems that may occur during power-up or during normal channel operation. These power-up and channel diagnostics are explained in chapter 6, *Module Diagnostics and Troubleshooting*.

System Overview

The modules communicate to the controller through the bus interface. The modules also receive 5 and 24V dc power through the bus interface. The 1769-IF4, -OF2, -OF8C, and -OF8V modules feature an external 24V dc power switch, providing you with the option of using an external power supply. See External Power Switch on page 2-10 for details.

You can install as many analog modules as your power supply can support. However, the modules have a power supply distance rating of 8, which means that they may not be located more than 8 modules away from the system power supply.

Figure 1.4 Determine Power Supply Distance

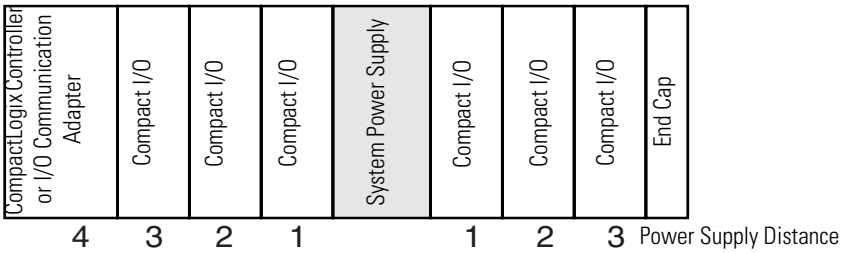

OR

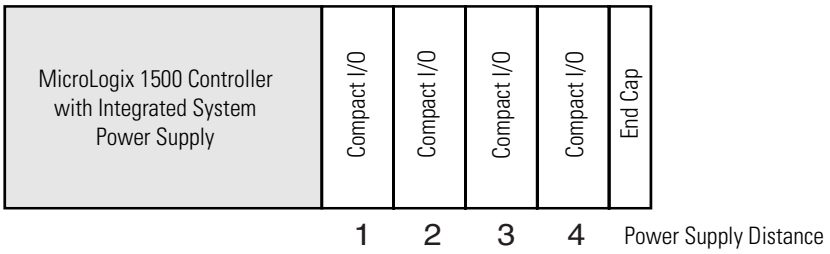

System Operation

At power-up, the module performs a check of its internal circuits, memory, and basic functions. During this time, the module status LED remains off. If no faults are found during power-up diagnostics, the module status LED is turned on.

After power-up checks are complete, the module waits for valid channel configuration data. If an invalid configuration is detected, the module generates a configuration error. Once a channel is properly configured and enabled, it begins the analog-to-digital or digital-to-analog conversion process.

Input Modules

Each time a channel is read by the input modules, that analog data value is tested by the modules for an over-range or under-range condition. If such a condition is detected, a unique bit is set in the channel status word. The channel status word is described in 1769-IF4 Input Data File on page 3-2 and 1769-IF8 Input Data File on page 3-18.

The controller reads the two's complement binary converted analog data from the modules. This typically occurs at the end of the program scan or when commanded by the control program. If the controller and the modules determine that the bus data transfer was made without error, the data is used in your control program.

Output Modules

The output modules monitor channels for over-range and under-range conditions and also for broken output wires and high load resistance (in current mode only). If such a condition is detected, a unique bit is set in the channel status word. The channel status word is described in 1769-OF2 Output Data File on page 4-2 and 1769-OF8C and -OF8V Output Data File on page 4-18.

The output module receives two's complement binary values from the bus master. This typically occurs at the end of the program scan or when commanded by the control program. If the controller and the module determine that the bus transfer was completed without error, the output module converts the data to an analog output signal.

Module Operation

Input Module Block Diagram

The input module's input circuitry consists of four differential analog inputs multiplexed into a single analog-to-digital (A/D) converter. The A/D converter reads the selected input signal and converts it to a digital value which is presented to the controller. The multiplexer sequentially switches each input channel to the module's A/D converter.

Figure 1.5 1769-IF4 Block Diagram

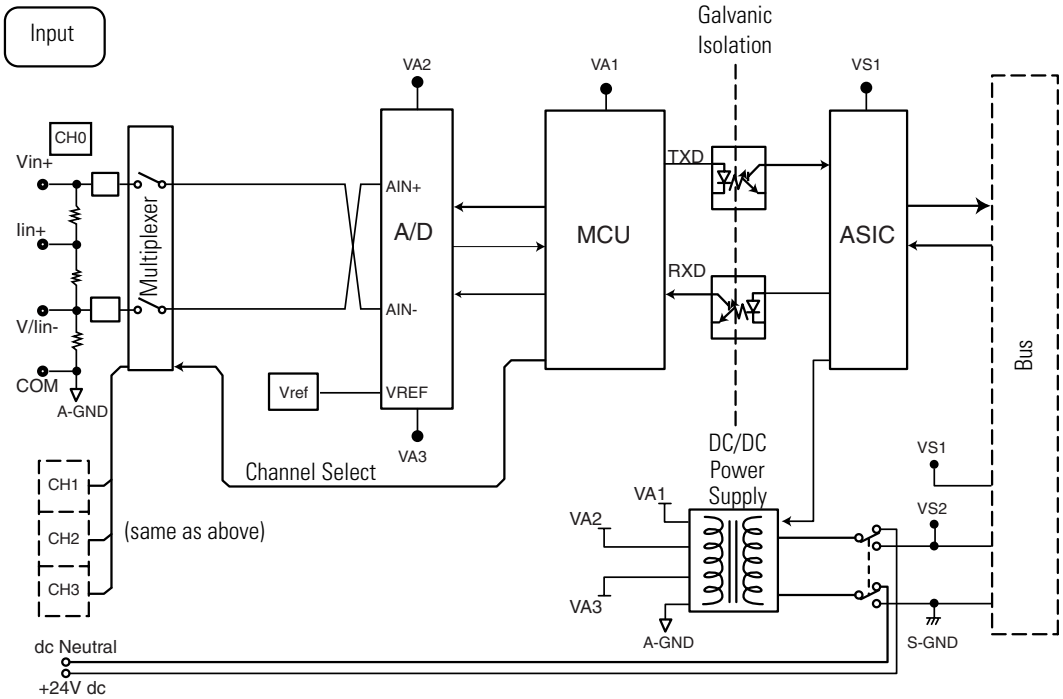

Figure 1.6 1769-IF8 Block Diagram

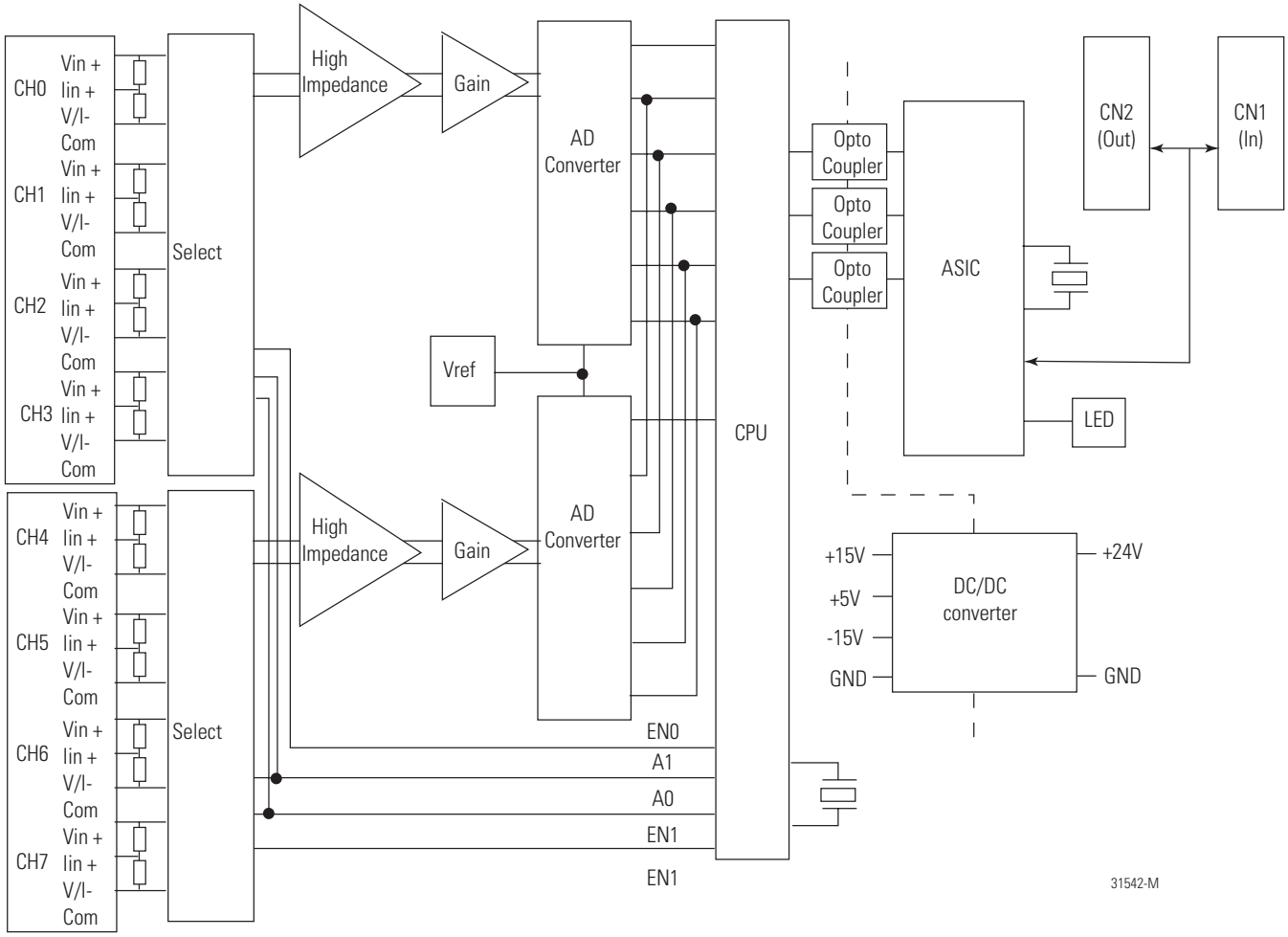

Output Module Block Diagram

The output module uses a digital-to-analog (D/A) converter to read the digital output data from the controller and convert it to an analog output signal.

Figure 1.7 1769-OF2 Block Diagram

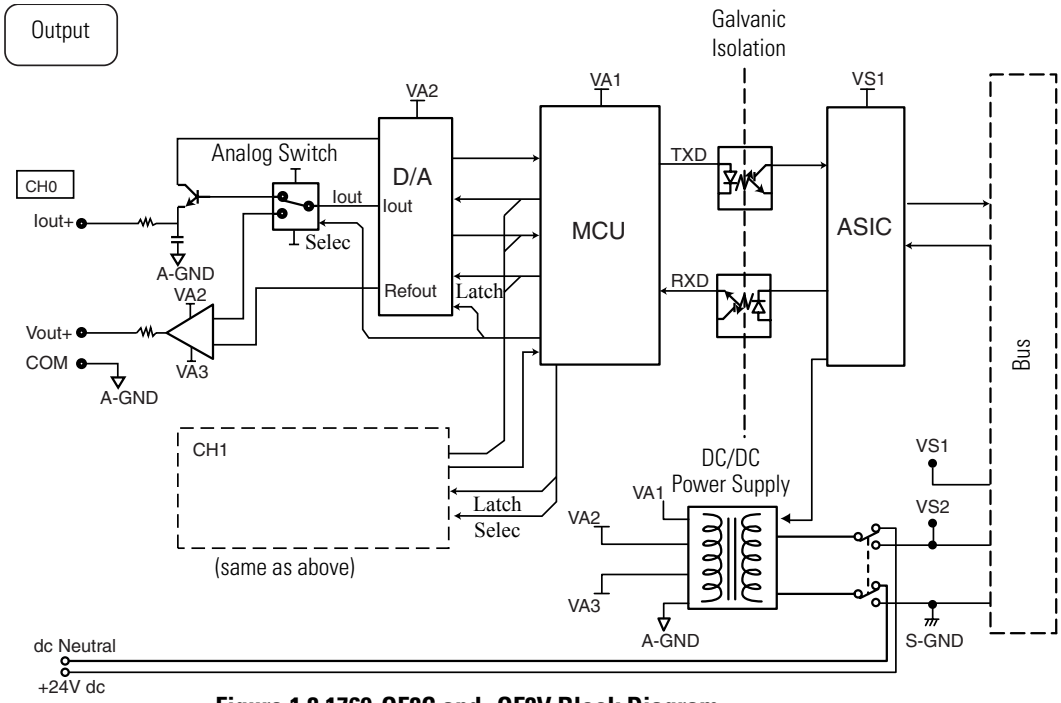

Figure 1.8 1769-OF8C and -OF8V Block Diagram

The following diagram shows only one of eight outputs. For each analog output, only one of the sections shown in broken-line boxes is implemented. The 1769-OF8C module uses only the Current Out section while the 1769-OF8V module uses only the Voltage Out section.

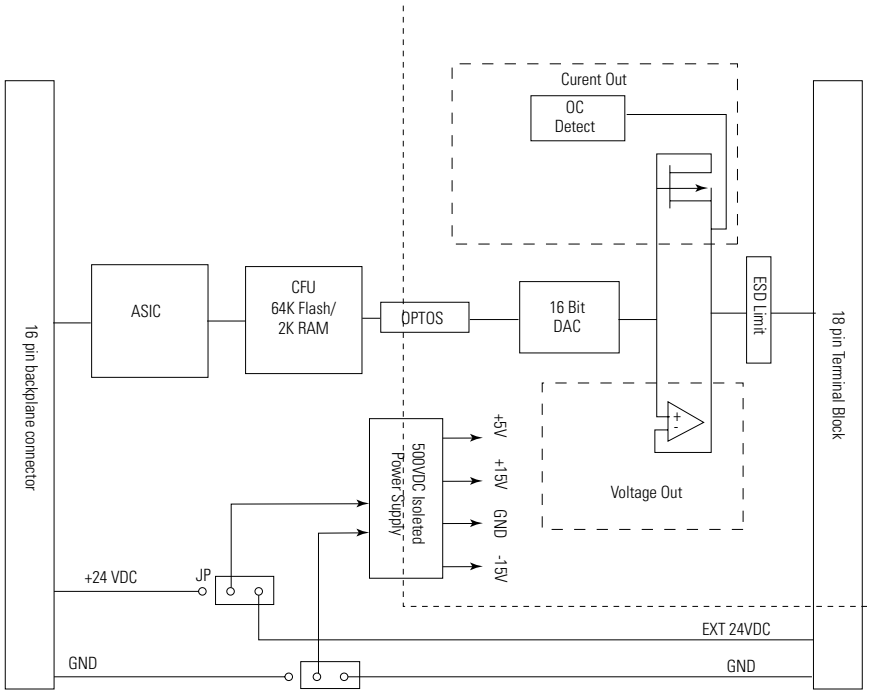

Module Field Calibration

The 1769-IF4 and -IF8 input modules performs autocalibration when a channel is initially enabled. In addition, if a channel is configured differently than the previously scanned channel, an autocalibration cycle is run as part of the reconfiguration process.

The 1769-OF2, -OF8C, and -OF8V output modules's calibration is guaranteed by its design. No field calibration is required.

Installation and Wiring

This chapter tells you how to:

- determine the power requirements for the modules
- avoid electrostatic damage
- install the module
- wire the module's terminal block
- wire input devices
- wire output devices

Compliance to European Union Directives

This product is approved for installation within the European Union and EEA regions. It has been designed and tested to meet the following directives.

EMC Directive

The analog modules are tested to meet Council Directive 89/336/EEC Electromagnetic Compatibility (EMC) and the following standards, in whole or in part, documented in a technical construction file:

- EN 50081-2
  EMC – Generic Emission Standard, Part 2 - Industrial Environment

- EN 50082-2
  EMC – Generic Immunity Standard, Part 2 - Industrial Environment

This product is intended for use in an industrial environment.

Low Voltage Directive

This product is tested to meet Council Directive 73/23/EEC Low Voltage, by applying the safety requirements of EN 61131-2 Programmable Controllers, Part 2 – Equipment Requirements and Tests.

For specific information required by EN61131-2, see the appropriate sections in this publication, as well as the following Allen-Bradley publications:

- *Industrial Automation, Wiring and Grounding Guidelines for Noise Immunity*, publication 1770-4.1
- *Automation Systems Catalog*, publication B113

Power Requirements

The modules receive power through the bus interface from the +5V dc/+24V dc system power supply. Some modules can also be supplied 24V dc power by an external power supply connected to the module's terminal block.

Table 2.1 Maximum Current Draw

Module	5V dc	24V dc
1769-IF4 (Series A)	120 mA	Not applicable
1769-IF4 (Series B)		60 mA[1]
1769-IF8 (Series A)		70 mA
1769-OF2 (Series A)	120 mA	Not applicable
1769-OF2 (Series B)		120 mA[1]
1769-OF8C (Series A)	145 mA	160 mA[1]
1769-OF8V (Series A)		125 mA[1]

(1) If the optional 24V dc Class 2 power supply is used, the 24V dc current draw from the bus is 0 mA.

General Considerations

Compact I/O is suitable for use in an industrial environment when installed in accordance with these instructions. Specifically, this equipment is intended for use in clean, dry environments (Pollution degree 2[1]) and to circuits not exceeding Over Voltage Category II[2] (IEC 60664-1).[3]

(1) Pollution Degree 2 is an environment where, normally, only non-conductive pollution occurs except that occasionally a temporary conductivity caused by condensation shall be expected.

(2) Over Voltage Category II is the load level section of the electrical distribution system. At this level transient voltages are controlled and do not exceed the impulse voltage capability of the product's insulation.

(3) Pollution Degree 2 and Over Voltage Category II are International Electrotechnical Commission (IEC) designations.

Hazardous Location Considerations

This equipment is suitable for use in Class I, Division 2, Groups A, B, C, D or non-hazardous locations only. The following WARNING statement applies to use in hazardous locations.

ATTENTION

EXPLOSION HAZARD

- Substitution of components may impair suitability for Class I, Division 2.
- Do not replace components or disconnect equipment unless power has been switched off or the area is known to be non-hazardous.
- Do not connect or disconnect components unless power has been switched off or the area is known to be non-hazardous.
- This product must be installed in an enclosure.
- All wiring must comply with N.E.C. article 501-4(b).

Prevent Electrostatic Discharge

ATTENTION

Electrostatic discharge can damage integrated circuits or semiconductors if you touch analog I/O module bus connector pins or the terminal block on the input module. Follow these guidelines when you handle the module:

- Touch a grounded object to discharge static potential.
- Wear an approved wrist-strap grounding device.
- Do not touch the bus connector or connector pins.
- Do not touch circuit components inside the module.
- If available, use a static-safe work station.
- When it is not in use, keep the module in its static-shield box.

Remove Power

ATTENTION

Remove power before removing or inserting this module. When you remove or insert a module with power applied, an electrical arc may occur. An electrical arc can cause personal injury or property damage by:

- sending an erroneous signal to your system's field devices, causing unintended machine motion
- causing an explosion in a hazardous environment
- Electrical arcing causes excessive wear to contacts on both the module and its mating connector and may lead to premature failure.

Reducing Noise

Most applications require installation in an industrial enclosure to reduce the effects of electrical interference. Analog inputs and outputs are highly susceptible to electrical noise. Electrical noise coupled to the analog inputs will reduce the performance (accuracy) of the module.

Group your modules to minimize adverse effects from radiated electrical noise and heat. Consider the following conditions when selecting a location for the analog module. Position the module:

- away from sources of electrical noise such as hard-contact switches, relays, and AC motor drives
- away from modules which generate significant radiated heat, such as the 1769-IA16. Refer to the module's heat dissipation specification.

In addition, route shielded, twisted-pair analog input and output wiring away from any high voltage I/O wiring.

Protecting the Circuit Board from Contamination

The printed circuit boards of the analog modules must be protected from dirt, oil, moisture, and other airborne contaminants. To protect these boards, the system must be installed in an enclosure suitable for the environment. The interior of the enclosure should be kept clean and the enclosure door should be kept closed whenever possible.

System Assembly

The module can be attached to the controller or an adjacent I/O module *before* or *after* mounting. For mounting instructions, see Panel Mounting Using the Dimensional Template on page 2-7, or DIN Rail Mounting on page 2-8. To

work with a system that is already mounted, see Replacing a Single Module within a System on page 2-9.

Figure 2.1 Assemble the Compact I/O System

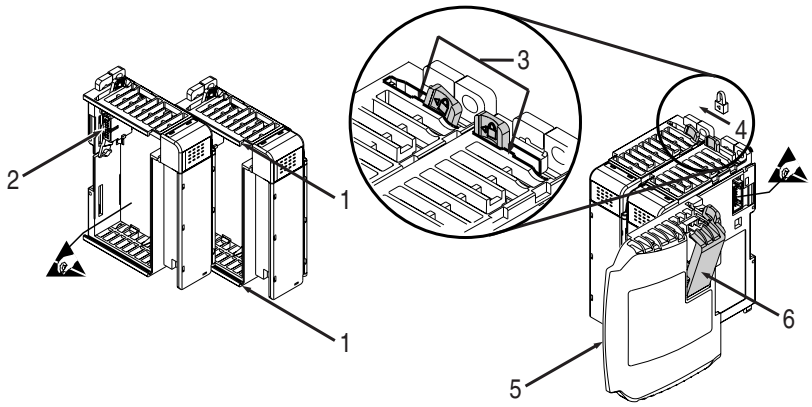

1. Disconnect power.
2. Check that the bus lever of the module to be installed is in the unlocked (fully right) position.
3. Use the upper and lower tongue-and-groove slots (1) to secure the modules together (or to a controller).
4. Move the module back along the tongue-and-groove slots until the bus connectors (2) line up with each other.
5. Push the bus lever back slightly to clear the positioning tab (3). Use your fingers or a small screwdriver.

6. To allow communication between the controller and module, move the bus lever fully to the left (4) until it clicks. Ensure it is locked firmly in place.

ATTENTION

When attaching I/O modules, it is very important that the bus connectors are securely locked together to ensure proper electrical connection.

7. Attach an end cap terminator (5) to the last module in the system by using the tongue-and-groove slots as before.

8. Lock the end cap bus terminator (6).

IMPORTANT

A 1769-ECR or 1769-ECL right or left end cap must be used to terminate the end of the bus.

Mounting

ATTENTION

During panel or DIN rail mounting of all devices, be sure that all debris (metal chips, wire strands, etc.) is kept from falling into the module. Debris that falls into the module could cause damage at power up.

Minimum Spacing

Maintain spacing from enclosure walls, wireways, adjacent equipment, etc. Allow 50 mm (2 in.) of space on all sides for adequate ventilation.

Figure 2.2 Space Requirements

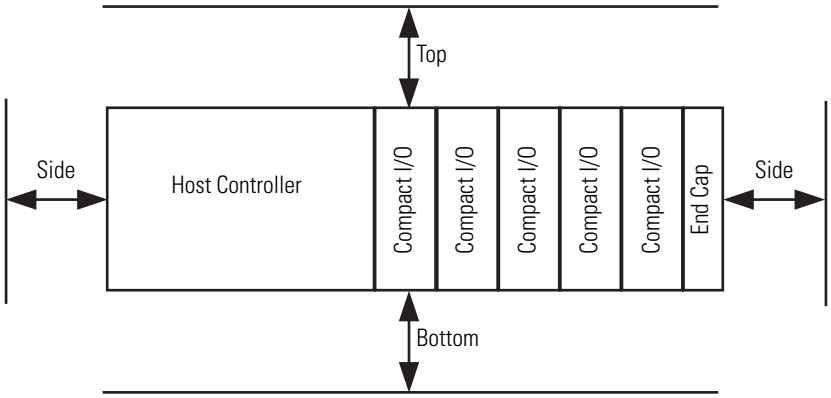

Panel Mounting

Mount the module to a panel using two screws per module. Use M4 or #8 panhead screws. Mounting screws are required on every module.

Figure 2.3 Panel Mounting Using the Dimensional Template

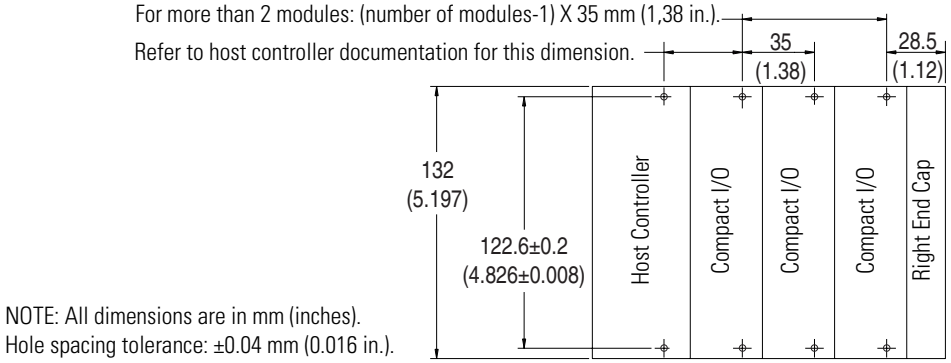

Figure 2.4 Panel Mounting for the 1769-IF8 Using the Dimensional Template

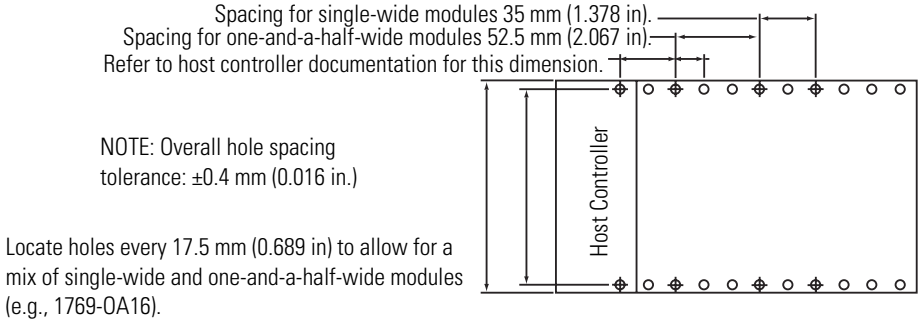

Panel Mounting Procedure Using Modules as a Template

The following procedure allows you to use the assembled modules as a template for drilling holes in the panel. If you have sophisticated panel mounting equipment, you can use the dimensional template provided on page 2-7. Due to module mounting hole tolerance, it is important to follow these procedures:

1. On a clean work surface, assemble no more than three modules.
2. Using the assembled modules as a template, carefully mark the center of all module-mounting holes on the panel.
3. Return the assembled modules to the clean work surface, including any previously mounted modules.
4. Drill and tap the mounting holes for the recommended M4 or #8 screw.
5. Place the modules back on the panel, and check for proper hole alignment.
6. Attach the modules to the panel using the mounting screws.

TIP If mounting more modules, mount only the last one of this group and put the others aside. This reduces remounting time during drilling and tapping of the next group.

7. Repeat steps 1 to 6 for any remaining modules.

DIN Rail Mounting

The module can be mounted using the following DIN rails:
35 x 7.5 mm (EN 50 022 - 35 x 7.5) or 35 x 15 mm (EN 50 022 - 35 x 15).

Before mounting the module on a DIN rail, close the DIN rail latches. Press the DIN rail mounting area of the module against the DIN rail. The latches will momentarily open and lock into place.

Replacing a Single Module within a System

The module can be replaced while the system is mounted to a panel (or DIN rail). Follow these steps in order:

1. Remove power. See important note on 2-4.
2. On the module to be removed, remove the upper and lower mounting screws from the module (or open the DIN latches using a flat-blade or phillips-style screwdriver).
3. Move the bus lever to the right to disconnect (unlock) the bus.
4. On the right-side adjacent module, move its bus lever to the right (unlock) to disconnect it from the module to be removed.
5. Gently slide the disconnected module forward. If you feel excessive resistance, check that the module has been disconnected from the bus, and that both mounting screws have been removed (or DIN latches opened).

TIP It may be necessary to rock the module slightly from front to back to remove it, or, in a panel-mounted system, to loosen the screws of adjacent modules.

6. Before installing the replacement module, be sure that the bus lever on the module to be installed and on the right-side adjacent module are in the unlocked (fully right) position.
7. Slide the replacement module into the open slot.
8. Connect the modules together by locking (fully left) the bus levers on the replacement module and the right-side adjacent module.
9. Replace the mounting screws (or snap the module onto the DIN rail).

External Power Switch

The analog modules have an external 24V dc power switch which gives you the option of using an external power supply. The switch is located in on the lower left portion of the module's circuit board, as shown below. With the switch pressed on the top (default), 24V dc power is drawn from the 1769 system power supply via the 1769 I/O bus. Pressed on the bottom, 24V dc power is drawn from the external power supply.

Wire the external power supply to the module via the module's terminal block. The external power supply must be Class 2 rated, with a 24V dc range of 20.4 to 26.4V dc and a minimum current rating that meets the needs of the modules used in your application. Refer to Maximum Current Draw on page 2-2.

IMPORTANT Only 1769-IF4 and -OF2 Series B modules have the 24V dc power switch.

Figure 2.5 External Power Switch

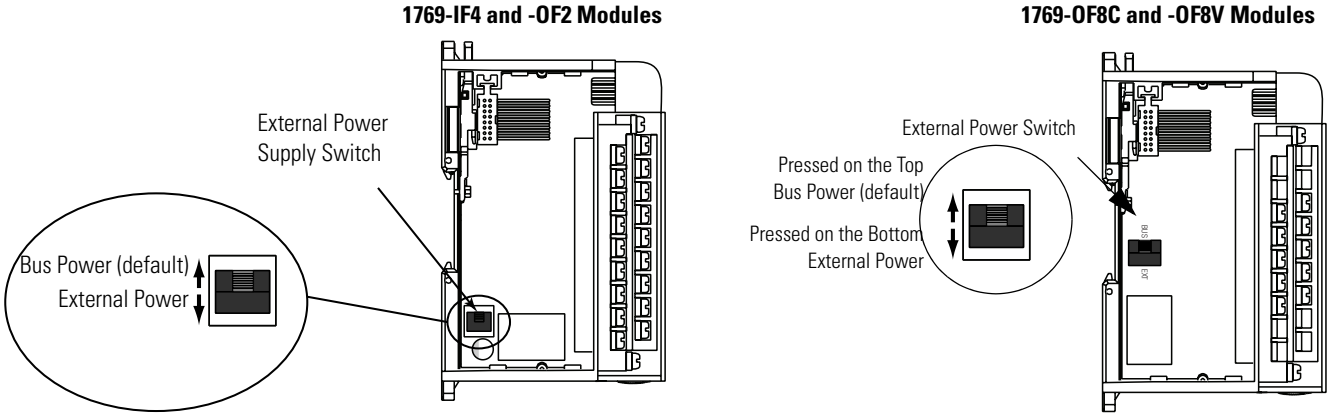

Field Wiring Connections

Grounding

This product is intended to be mounted to a well-grounded mounting surface such as a metal panel. Additional grounding connections from the module's mounting tabs or DIN rail (if used) are not required unless the mounting surface cannot be grounded. Refer to *Industrial Automation Wiring and Grounding Guidelines*, Allen-Bradley publication 1770-4.1, for additional information.

System Wiring Guidelines

Consider the following when wiring your system:

General

- All module commons (ANLG COM) are connected in the analog module. The analog common (ANLG COM) is not connected to earth ground inside the module.
- Channels are not isolated from each other.
- Do not use the analog module's NC terminals as connection points.
- To ensure optimum accuracy, limit overall cable impedance by keeping your cable as short as possible. Locate the I/O system as close to your sensors or actuators as your application will permit.
- Use Belden™ 8761, or equivalent, shielded wire.
- Keep shield connection to ground as short as possible.
- Under normal conditions, the drain wire and shield junction must be connected to earth ground via a panel or DIN rail mounting screw at the analog I/O module end.[1]

1769-IF4 and -IF8 Input Modules

- If multiple power supplies are used with analog inputs, the power supply commons must be connected together.
- The 1769-IF4 and -IF8 modules do not provide loop power for analog inputs. Use a power supply that matches the input transmitter specifications.
- Differential analog inputs are more immune to noise than single-ended analog inputs.
- Voltages on Vin+, V/Iin-, and Iin+ of the 1769-IF4 and -IF8 modules must be within ±10V dc of analog common.

1769-OF2, -OF8C, and -OF8V Output Modules

- Voltage outputs (Vout 0+ and Vout 1+ for 1769-OF2, Vout 0+ through Vout 7+ for 1769-OF8V) of the output modules are referenced to ANLG COM. Load resistance for a voltage output channel must be equal to or greater than 1K Ω
- Current outputs (Iout 0+ and Iout 1+ for 1769-OF2, Iout 0+ through Iout 7+ for 1769-OF8C) of the output modules source current that returns to ANLG COM. Load resistance for a current output channel must remain between 0 and 500 Ω

(1) In environments where high-frequency noise may be present, it may be necessary to directly ground cable shields to earth at the module end and via a 0.1μF capacitor at the sensor end.

Effect of Transducer/Sensor and Cable Length Impedance on Voltage Input Accuracy

For voltage inputs, the length of the cable used between the transducer/sensor and the 1769-IF4 or -IF8 module can affect the accuracy of the data provided by the module.

Figure 2.6 Voltage Input Accuracy

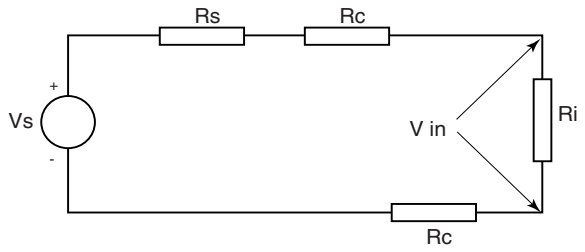

Where:

Rc = DC resistance of the cable (each conductor) depending on cable length

Rs = Source impedance of analog transducer/sensor input

Ri = Impedance of the voltage input (220 KΩ for 1769-IF4 and -IF8)

Vs = Voltage source (voltage at the transducer/sensor input device)

Vin = Measured potential at the module input

%Ai = Percent added inaccuracy in a voltage-based system due to source and cable impedance.

$$Vin = \frac{[Ri \times Vs]}{[Rs + (2 \times Rc) + Ri]}$$

For example, for Belden 8761 two conductor, shielded cable:

Rc = 16 Ω/1000 ft
Rs = 0 (ideal source)

$$\%Ai = \left(1 \angle \frac{Vin}{Vs}\right) \times 100$$

Table 2.2 Effect of Cable Length on Input Accuracy

Length of Cable (m)	dc resistance of the cable, Rc (Ω)	Accuracy impact at the input module
50	2.625	0.00238%
100	5.25	0.00477%
200	10.50	0.00954%
300	15.75	0.0143%

As input source impedance (Rs) and/or resistance (dc) of the cable (Rc) get larger, system accuracy decreases. If you determine that the inaccuracy error is significant, implementing the following equation in the control program can compensate for the added inaccuracy error due to the impedance of the source and cable.

$$Vs = Vin \times \frac{[Rs + (2 \times Rc) + Ri]}{Ri}$$

TIP In a current loop system, source and cable impedance do not impact system accuracy.

Effect of Device and Cable Output Impedance on Output Module Accuracy

The maximum value of the output impedance is shown in the example below, because it creates the largest deviation from an ideal voltage source.

Figure 2.7 Output Module Accuracy

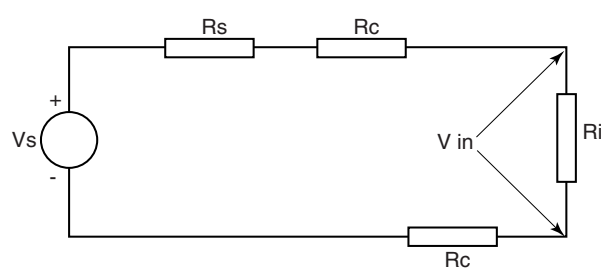

Where:

Rc = DC resistance of the cable (each conductor) depending on cable length

Rs = Source impedance (15 Ω for 1769-OF2 and 1 Ω for 1769-OF8V)

Ri = Impedance of the voltage input (220 KΩ for 1769-IF4)

Vs = Voltage at the output of 1769-OF2

Vin = Measured potential at the module input

%Ai = Percent added inaccuracy in a voltage-based system due to source and cable impedance.

$$Vin = \frac{[Ri \times Vs]}{[Rs + (2 \times Rc) + Ri]}$$

For example, for Belden 8761 two conductor, shielded cable and a 1769-IF4 input module:

Rc = 16 Ω/1000 ft
Rs = 15 Ω
Ri = 220 KΩ

$$\%Ai = \left(1 \angle \frac{Vin}{Vs}\right) \times 100$$

Table 2.3 Effect of Output Impedance and Cable Length on Accuracy

Length of Cable (m)	dc resistance of the cable Rc (Ω)	Accuracy impact at the input module
50	2.625	0.00919%
100	5.25	0.01157%
200	10.50	0.01634%
300	15.75	0.02111%

As output impedance (Rs) and/or resistance (dc) of the cable (Rc) get larger, system accuracy decreases. If you determine that the inaccuracy error is significant, implementing the following equation in the control program can compensate for the added inaccuracy error due to the impedance of the output module and cable.

$$Vs = Vin \times \frac{[Rs + (2 \times Rc) + Ri]}{Ri}$$

TIP In a current loop system, source and cable impedance do not impact system accuracy.

Labeling the Terminals

A removable, write-on label is provided with the module. Remove the label from the door, mark the identification of each terminal with permanent ink, and slide the label back into the door. Your markings (ID tag) will be visible when the module door is closed.

Figure 2.8 Terminal Labels

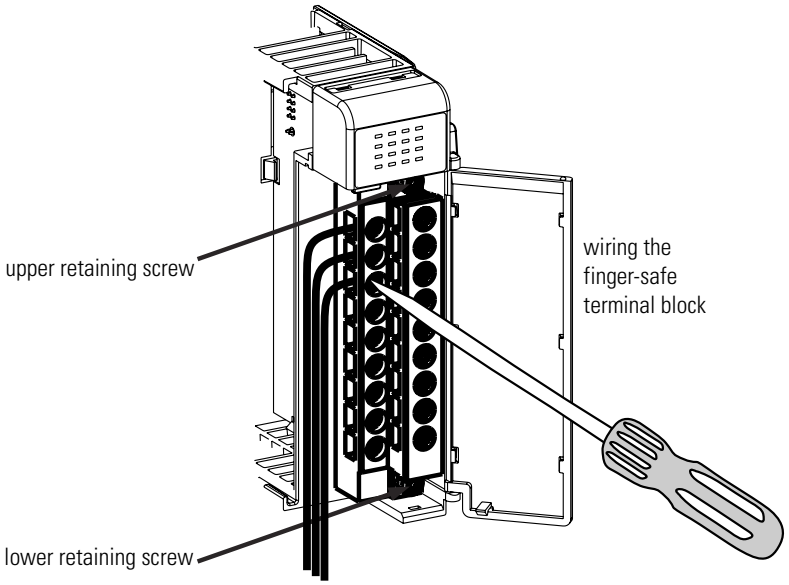

Removing the Finger-Safe Terminal Block

When wiring field devices to the module, it is not necessary to remove the terminal block. If you remove the terminal block, use the write-on label on the side of the terminal block to identify the module slot location and type. RTB position can be indicated by circling either the 'R' for right side or 'L' for left side.

Figure 2.9 Finger-Safe Terminal Block

To remove the terminal block, loosen the upper and lower retaining screws. The terminal block will back away from the module as you remove the screws. When replacing the terminal block, torque the retaining screws to 0.46 Nm (4.1 in-lbs).

Wiring the Finger-Safe Terminal Block

When wiring the terminal block, keep the finger-safe cover in place.

1. Loosen the terminal screws to be wired.
2. Begin wiring at the bottom of the terminal block and move up.
3. Route the wire under the terminal pressure plate. You can use the bare wire or a spade lug. The terminals accept a 6.35 mm (0.25 in.) spade lug.

TIP The terminal screws are non-captive. Therefore, it is possible to use a ring lug [maximum 1/4 inch o.d. with a 0.139 inch minimum i.d. (M3.5)] with the module.

4. Tighten the terminal screw making sure the pressure plate secures the wire. Recommended torque when tightening terminal screws is 0.68 Nm (6 in-lbs).

TIP If you need to remove the finger-safe cover, insert a screwdriver into one of the square, wiring holes and gently pry the cover off. If you wire the terminal block with the finger-safe cover removed, you will not be able to put it back on the terminal block because the wires will be in the way.

Wire Size and Terminal Screw Torque

Each terminal accepts up to two wires.

Table 2.4 Terminal Wire Considerations

Wire Type		Wire Size	Terminal Screw Torque	Retaining Screw Torque
Solid	Cu-90°C (194°F)	#14 to #22 AWG	0.68 Nm (6 in-lbs)	0.46 Nm (4.1 in-lbs)
Stranded	Cu-90°C (194°F)	#16 to #22 AWG	0.68 Nm (6 in-lbs)	0.46 Nm (4.1 in-lbs)

Wiring the Modules

ATTENTION

To prevent shock hazard, care should be taken when wiring the module to analog signal sources. Before wiring any analog module, disconnect power from the system power supply and from any other source to the analog module.

After the analog module is properly installed, follow the wiring procedure below. To ensure proper operation and high immunity to electrical noise, always use Belden™ 8761 (shielded, twisted-pair) or equivalent wire.

ATTENTION

When wiring an analog input, take care to avoid connecting a voltage source to a channel configured for current input. Improper module operation or damage to the voltage source can occur.

Never connect a voltage or current source to an analog output channel.

Figure 2.10 Belden 8761 Wire

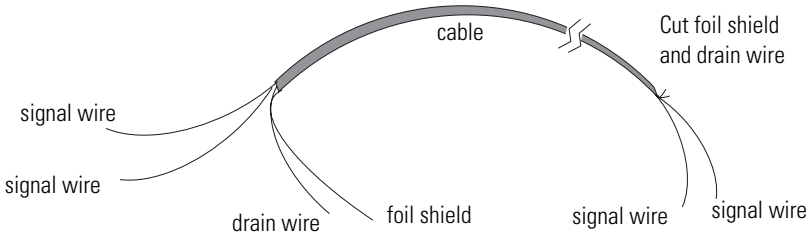

To wire your module follow these steps.

1. At each end of the cable, strip some casing to expose the individual wires.

2. Trim the signal wires to 2-inch lengths. Strip about 3/16 inch (5 mm) of insulation away to expose the end of the wire.

ATTENTION

Be careful when stripping wires. Wire fragments that fall into a module could cause damage at power up.

3. At one end of the cable, twist the drain wire and foil shield together.

   Under normal conditions, this drain wire and shield junction must be connected to earth ground, via a panel or DIN rail mounting screw at the analog I/O module end. Keep the length of the drain wire as short as possible.

   In environments where high frequency noise may be present, it may be necessary to ground the cable shields to earth at the module end via a 0.1 µF capacitor at the sensor end for analog inputs and at the load end for analog outputs.

4. At the other end of the cable, cut the drain wire and foil shield back to the cable.

5. Connect the signal wires to the terminal block as shown in Analog Input Modules Wiring on page 2-19 and Analog Output Modules Wiring on page 2-24. Connect the other end of the cable to the analog input or output device.

6. Repeat steps 1 through 5 for each channel on the module.

Terminal Door Label

A removable, write-on label is provided with the module. Remove the label from the door, mark the identification of each terminal with permanent ink, and slide the label back into the door. Your markings (ID tag) will be visible when the module door is closed.

Analog Input Modules Wiring

Figure 2.11 1769-IF4 Terminal Layout

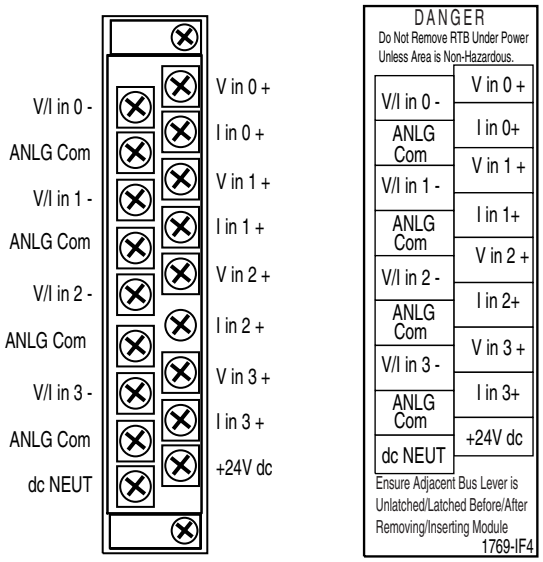

Figure 2.12 1769-IF4 Wiring Diagram Showing Differential Inputs

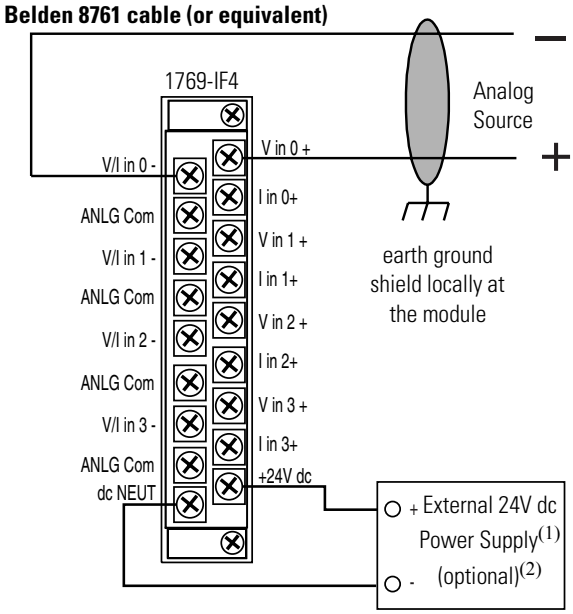

(1) The external power supply must be rated Class 2, with a 24V dc range of 20.4 to 26.4V dc and 60 mA minimum for a single input module.

(2) Series B and later modules provide this option.

Figure 2.13 1769-IF4 Wiring Single-ended Sensor/Transmitter Types

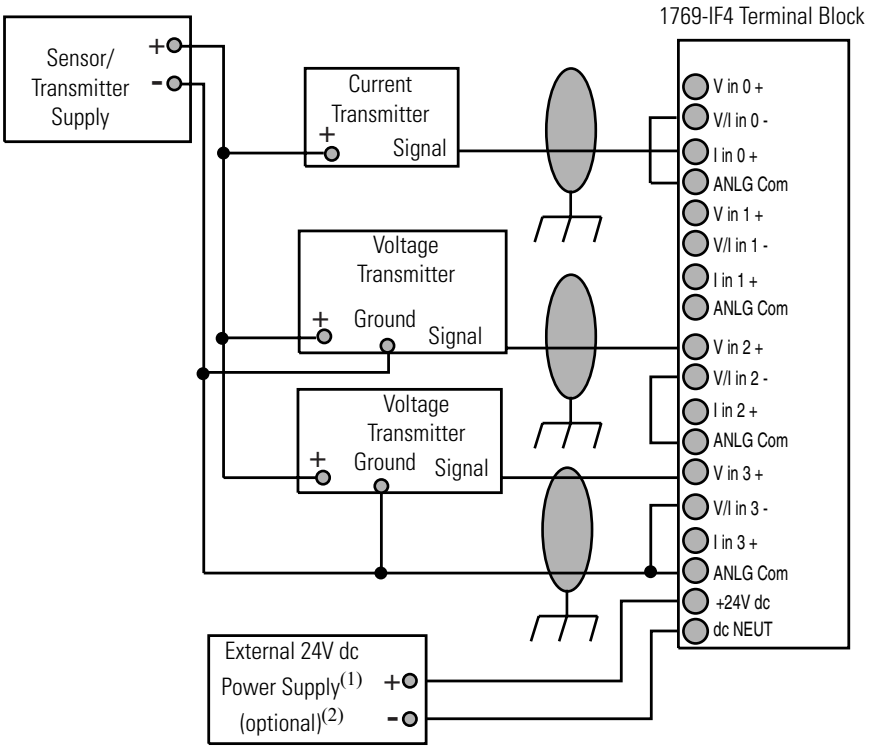

(1) The external power supply must be rated Class 2, with a 24V dc range of 20.4 to 26.4V dc and 60 mA minimum for a single input module.

(2) Series B and later modules provide this option.

Figure 2.14 1769-IF4 Wiring Mixed Transmitter Types

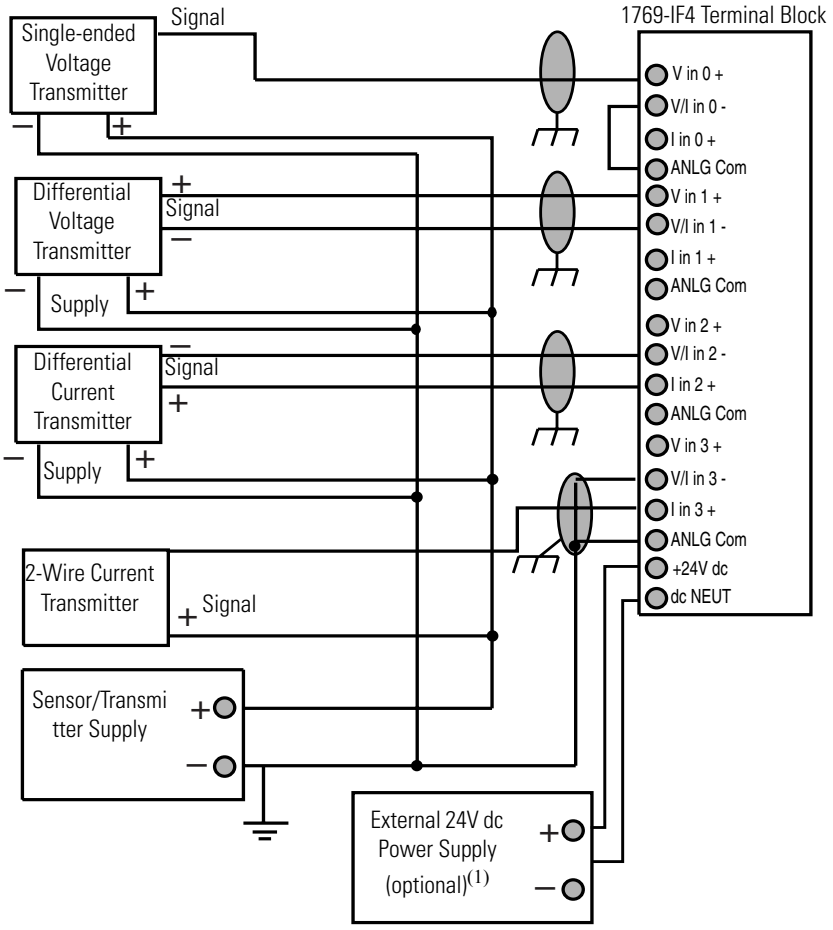

(1) The external power supply must be rated Class 2, with a 24V dc range of 20.4 to 26.4V dc and 60 mA minimum for a single input module.

(2) Series B and later modules provide this option.

Figure 2.15 1769-IF8 Terminal Layout

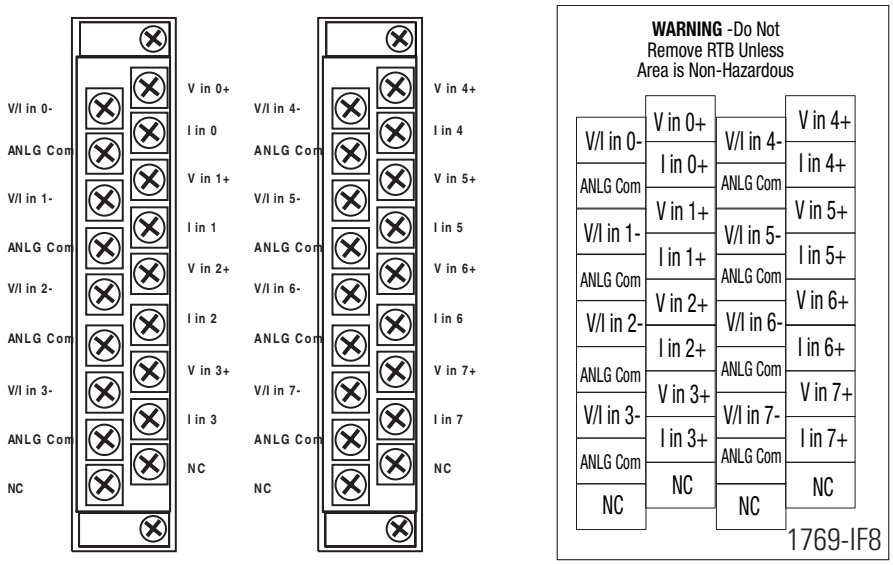

Figure 2.16 1769-IF8 Wiring Differential Inputs

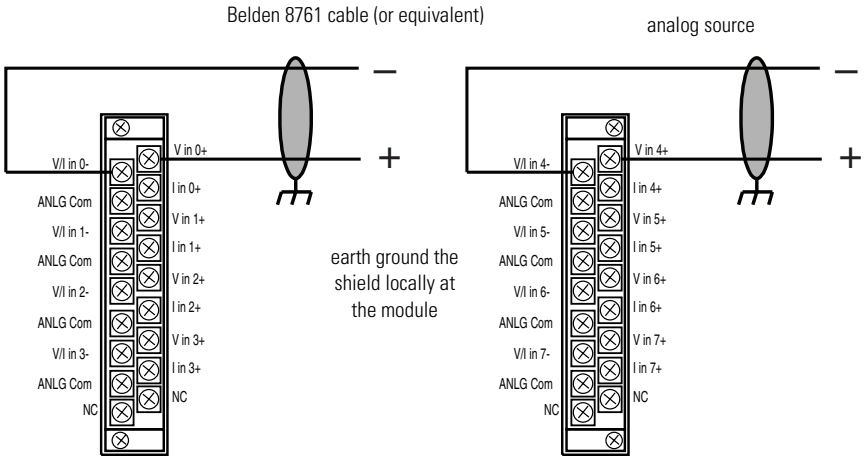

Figure 2.17 1769-IF8 Wiring Single-Ended Sensor/Transmitter Types

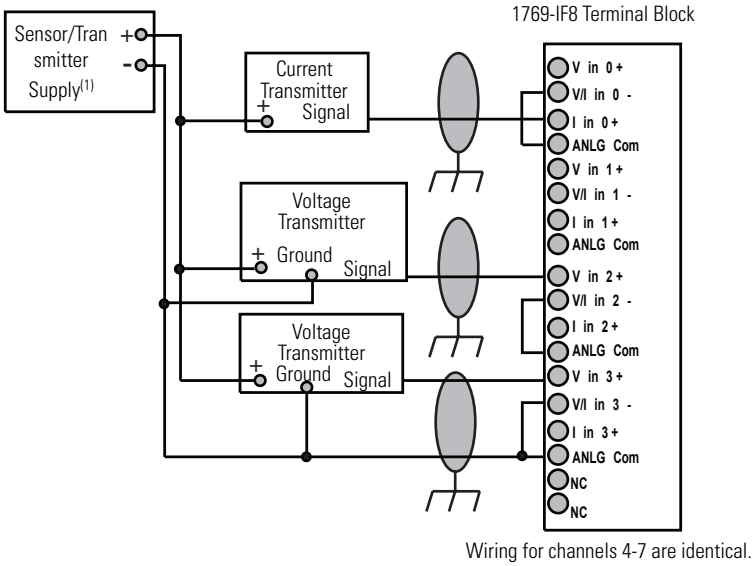

(1) The external power supply must be rated Class 2, with a 24V dc range of 20.4 to 26.4V dc and 60 mA minimum for a single input module.

Figure 2.18 1769-IF8 Wiring Mixed Transmitter Types

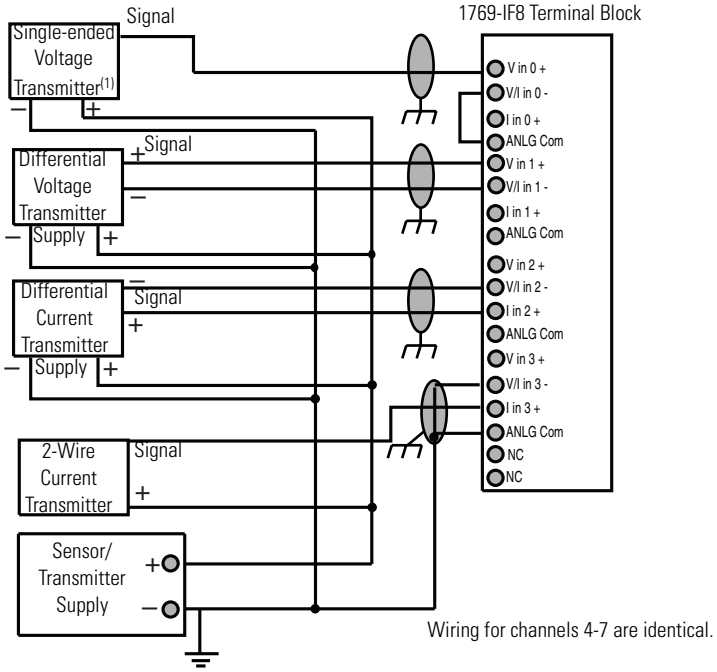

(1) The external power supply must be rated Class 2, with a 24V dc range of 20.4 to 26.4V dc and 60 mA minimum for a single input module.

Analog Output Modules Wiring

Figure 2.19 1769-OF2 Terminal Layout

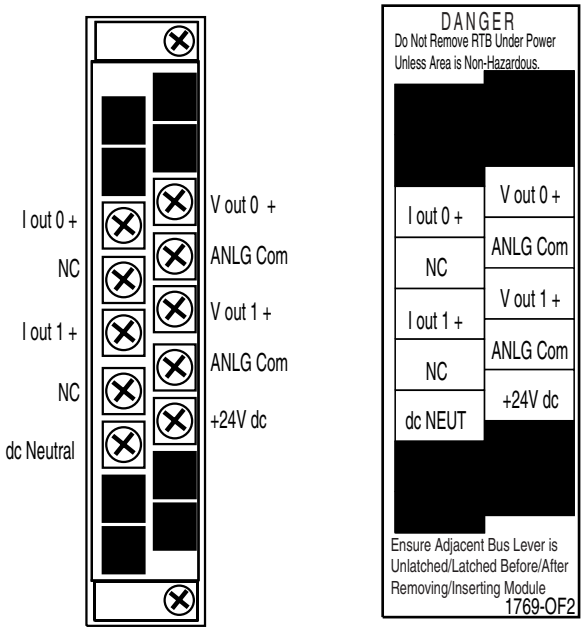

Figure 2.20 1769-OF2 Wiring Diagram

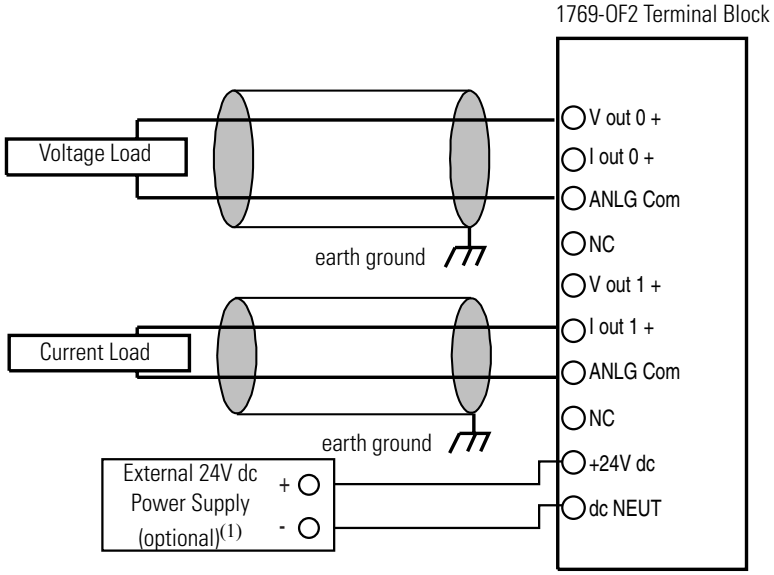

(1) The external power supply must be rated Class 2, with a 24V dc range of 20.4 to 26.4V dc and 120 mA minimum per output module.

Figure 2.21 1769-OF8C Terminal Layout

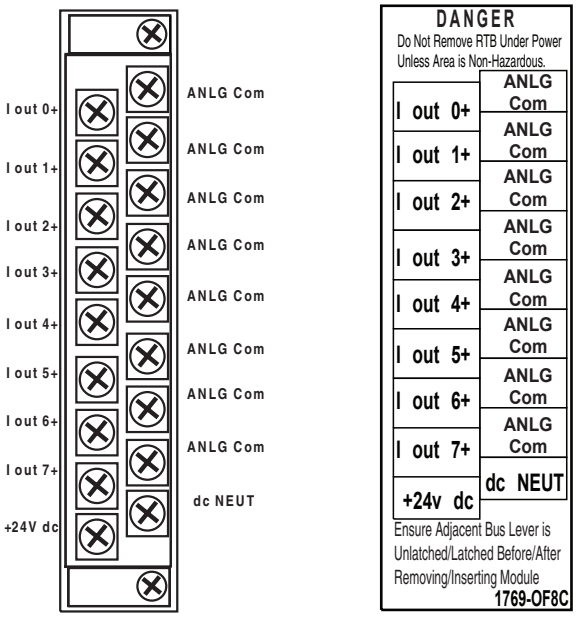

Figure 2.22 1769-OF8C Wiring Diagram

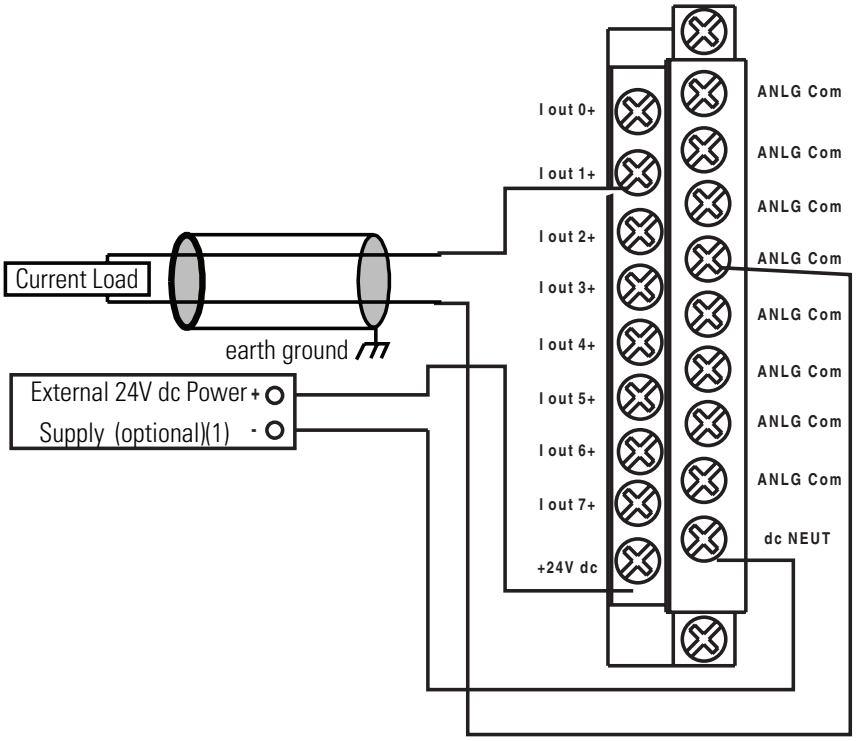

(1) The external power supply must be rated Class 2, with a 24V dc range of 20.4 to 26.4V dc and 120 mA minimum per output module.

Figure 2.23 1769-OF8V Terminal Layout

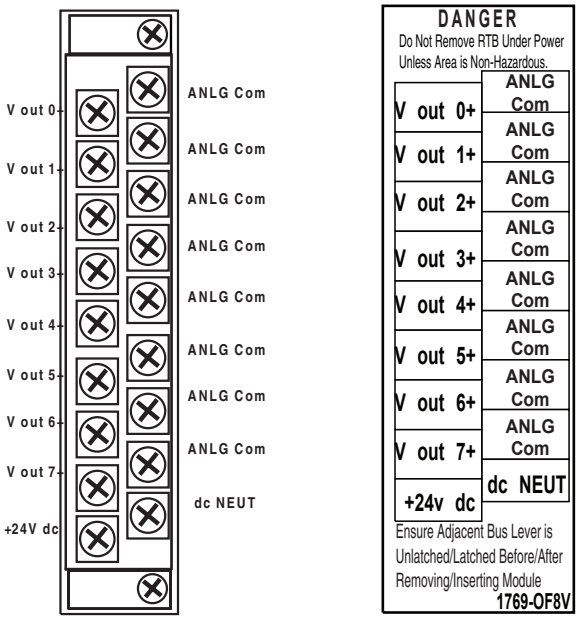

Figure 2.24 1769-OF8V Wiring Diagram

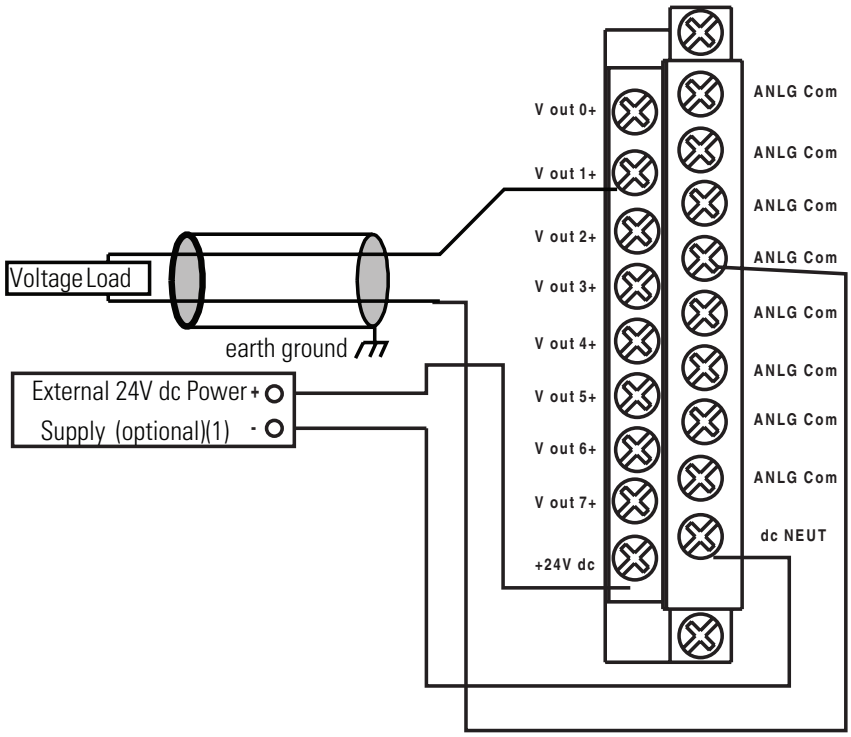

(1) The external power supply must be rated Class 2, with a 24V dc range of 20.4 to 26.4V dc and 120 mA minimum per output module.

Module Data, Status, and Channel Configuration for the Input Modules

This chapter examines the analog input modules' data table, channel status, and channel configuration word. The 1769-IF4 module information follows. For 1769-IF8 module information, see page 3-16.

1769-IF4 Input Module Addressing

The 1769-IF4 memory map shows the input and configuration image tables for the 1769-IF4. Detailed information on the input image table can be found in 1769-IF4 Input Data File on page 3-2.

Figure 3.1 1769-IF4 Memory Map

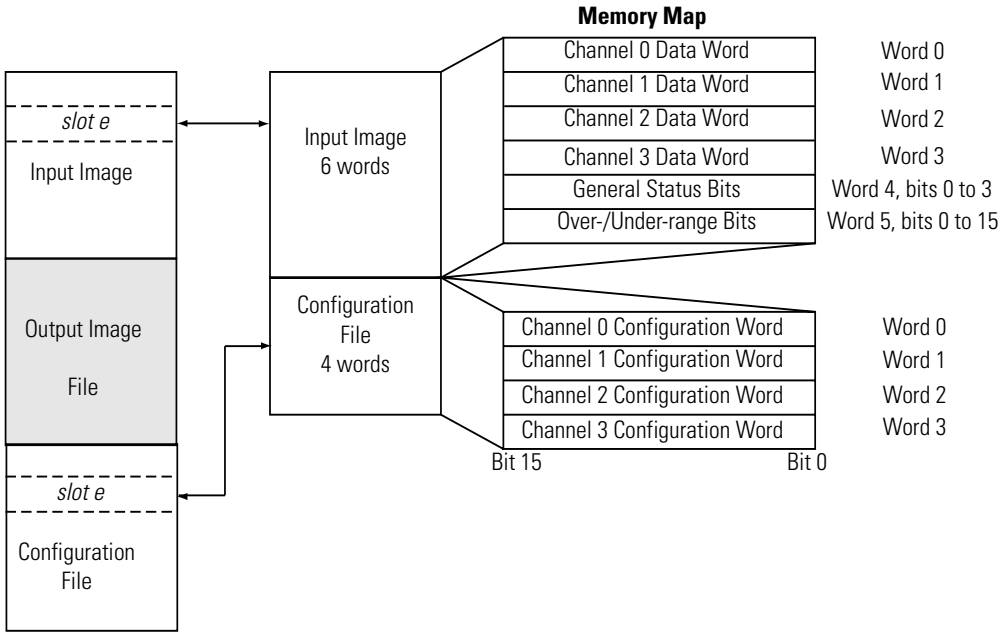

1769-IF4 Input Image

The 1769-IF4 input image file represents data words and status bits. Input words 0 through 3 hold the input data that represents the value of the analog inputs for channels 0 through 3. These data words are valid only when the channel is enabled and there are no errors. Input words 4 and 5 hold the status bits. To receive valid status information, the channel must be enabled.

TIP You can access information in the input image file using the programming software configuration screen.

1769-IF4 Configuration File

The configuration file contains information that you use to define the way a specific channel functions. The configuration file is explained in more detail in 1769-IF4 Configuration Data File on page 3-4.

TIP Not all controllers support program access to the configuration file. Refer to your controller's user manual.

1769-IF4 Input Data File

The input data table lets you access analog input module read data for use in the control program, via word and bit access. The data table structure is shown in table below.

Table 3.1 1769-IF4 Input Data Table

Word/Bit	15	14	13	12	11	10	9	8	7	6	5	4	3	2	1	0
Word 0	SGN	Analog Input Data Value Channel 0														
Word 1	SGN	Analog Input Data Value Channel 1														
Word 2	SGN	Analog Input Data Value Channel 2														
Word 3	SGN	Analog Input Data Value Channel 3														
Word 4	Not Used (Bits set to 0)												S3	S2	S1	S0
Word 5	U0	O0	U1	O1	U2	O2	U3	O3	Set to zero							

1769-IF4 Input Data Values

Words 0 through 3 contain the converted analog input data from the field device. The most significant bit (MSB) is the sign bit.

General Status Bits (S0 through S3)

Word 4, bits 0 through 3 contain the general operational status bits for input channels 0 through 3. If set (1), these bits indicate an error associated with that channel. The over- and under-range bits for channels 0 through 3 are logically ORed to the appropriate general status bit.

Over-Range Flag Bits (O0 through O3)

Over-range bits for channels 3 through 0 are contained in word 5, bits 8, 10, 12, and 14. They apply to all input types. When set (1), this bit indicates input signals beyond the normal operating range. However, the module continues to convert analog data to the maximum full range value. The bit is automatically reset (0) by the module when the over-range condition is cleared and the data value is within the normal operating range.

Under-Range Flag Bits (U0 through U3)

Under-range bits for channels 3 through 0 are contained in word 5, bits 9, 11, 13, and 15. They apply to all input types. When set (1), this bit indicates input signals below the normal operating range. It may also indicate an open circuit condition, when the module is configured for the 4 to 20 mA range. However, the module continues to convert analog data to the minimum full range value. The bit is automatically reset (0) by the module when the under-range condition is cleared and the data value is within the normal operating range.

1769-IF4 Configuration Data File

The configuration file lets you determine how each individual input channel will operate. Parameters such as the input type and data format are set up using this file. This data file is writable and readable. The default value of the configuration data table is all zeros. The structure of the channel configuration file is shown below.

Table 3.2 1769-IF4 Configuration Data Table[1]

Word/Bit	15	14	13	12	11	10	9	8	7	6	5	4	3	2	1	0
Word 0	Enable Channel 0	Input Data Format Select Channel 0			Input Type/Range Select Channel 0				Reserved				Input Filter Select Channel 0			
Word 1	Enable Channel 1	Input Data Format Select Channel 1			Input Type/Range Select Channel 1				Reserved				Input Filter Select Channel 1			
Word 2	Enable Channel 2	Input Data Format Select Channel 2			Input Type/Range Select Channel 2				Reserved				Input Filter Select Channel 2			
Word 3	Enable Channel 3	Input Data Format Select Channel 3			Input Type/Range Select Channel 3				Reserved				Input Filter Select Channel 3			

(1) The ability to change these values using your control program is not supported by all controllers. Refer to your controller manual for details.

The configuration file is typically modified using the programming software configuration screen. For information on configuring the module using MicroLogix 1500 and RSLogix 500, see Appendix B; for CompactLogix and RSLogix 5000, see Appendix C; for 1769-ADN DeviceNet Adapter and RSNetWorx, see Appendix D.

The configuration file can also be modified through the control program, if supported by the controller. The structure and bit settings are shown in Channel Configuration on page 3-5.

Channel Configuration

Each channel configuration word consists of bit fields, the settings of which determine how the channel operates. See the table below and the descriptions that follow for valid configuration settings and their meanings. The default bit status of the configuration file is all zeros.

Table 3.3 Bit Definitions for Channel Configuration Words 0 through 3

Bit(s)	Define	These bit settings																Indicate this
		15	14	13	12	11	10	9	8	7	6	5	4	3	2	1	0	
0 to 3	Input Filter Select									Not Used				0	0	0	0	60 Hz
														0	0	0	1	50 Hz
														0	0	1	0	Not Used
														0	0	1	1	250 Hz
														0	1	0	0	500 Hz
																		Not Used(1)
4 to 7	Reserved																	Reserved(2)
8 to 11	Input Type/Range Select					0	0	0	0									-10 to +10V dc
						0	0	0	1									0 to 5V dc
						0	0	1	0									0 to 10V dc
						0	0	1	1									4 to 20 mA
						0	1	0	0									1 to 5V dc
						0	1	0	1									0 to 20 mA
																		Not Used[1]
12 to 14	Input Data Format Select		0	0	0													Raw/Proportional Data
			0	0	1													Engineering Units
			0	1	0													Scaled for PID(3)
			0	1	1													Percent Range
																		Not Used[1]
15	Enable Channel	1																Enabled
		0																Disabled

(1) Any attempt to write a non-valid (not used) bit configuration into any selection field results in a module configuration error. See Configuration Errors on page 5-6.

(2) If reserved bits are not equal to zero, a configuration error occurs.

(3) This range is applicable to the PID function of the MicroLogix 1500 packaged controller, PLC, or SLC controllers. Logix controllers can use this or one of the other ranges for their PID functions.

Enable/Disable Channel

This configuration selection lets each channel to be individually enabled.

TIP When a channel is not enabled (0), no voltage or current input is provided to the controller by the A/D converter.

Input Filter Selection

The input filter selection field lets you select the filter frequency for each channel and provides system status of the input filter setting for analog input channels 0 through 3. The filter frequency affects the noise rejection characteristics, as explained below. Select a filter frequency considering acceptable noise and step response time.

Noise Rejection

The 1769-IF4 uses a digital filter that provides noise rejection for the input signals. The filter is programmable, allowing you to select from four filter frequencies for each channel. The digital filter provides the highest noise rejection at the selected filter frequency. A lower frequency (60 Hz versus 250 Hz) can provide better noise rejection but it increases channel update time. Transducer power supply noise, transducer circuit noise, or process variable irregularities may also be sources of normal mode noise.

Common Mode Rejection is better than 60 dB at 50 and 60 Hz, with the 50 and 60 Hz filters selected, respectively. The module performs well in the presence of common mode noise as long as the signals applied to the user plus and minus input terminals do not exceed the common mode voltage rating (± 10 V) of the module. Improper earth ground may be a source of common mode noise.

Channel Step Response

The selected channel filter frequency determines the channel's step response. The step response is the time required for the analog input signal to reach 100% of its expected final value. This means that if an input signal changes faster than the channel step response, a portion of that signal will be attenuated by the channel filter.

Table 3.4 Filter Frequency and Step Response

Filter Frequency	Cut-off Frequency	Step Response
50 Hz	13.1 Hz	60 ms
60 Hz	15.7 Hz	50 ms
250 Hz	65.5 Hz	12 ms
500 Hz	131 Hz	6 ms

Channel Cut-Off Frequency

The -3 dB frequency is the filter cut-off frequency. The cut-off frequency is defined as the point on the frequency response curve where frequency components of the input signal are passed with 3 dB of attenuation. All input frequency components at or below the cut-off frequency are passed by the digital filter with less than 3 dB of attenuation. All frequency components above the cut-off frequency are increasingly attenuated as shown in the graphs below.

The cut-off frequency for each channel is defined by its filter frequency selection. Choose a filter frequency so that your fastest changing signal is below that of the filter's cut-off frequency. The cut-off frequency should not be confused with the update time. The cut-off frequency relates to how the digital filter attenuates frequency components of the input signal. The update time defines the rate at which an input channel is scanned and its channel data word is updated.

Figure 3.2 Frequency Response Graphs

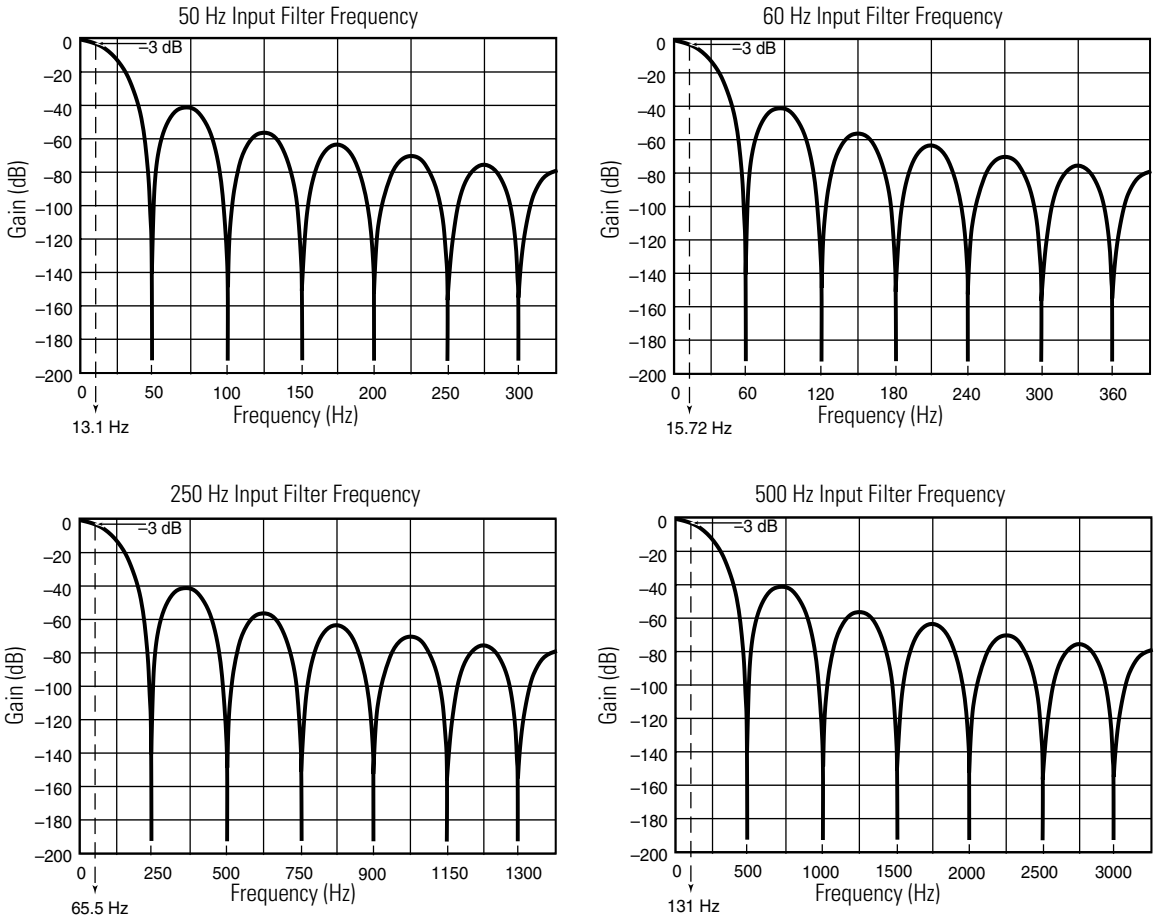

Module Update Time and Scanning Process

The module update time is defined as the time required for the module to sample and convert the input signals of all enabled input channels and provide the resulting data values to the processor. Module update time can be calculated by adding the sum of all enabled channel times. Channel times include channel scan time, channel switching time, and reconfiguration time. The module sequentially samples the channels in a continuous loop.

Figure 3.3 Sequential Sampling

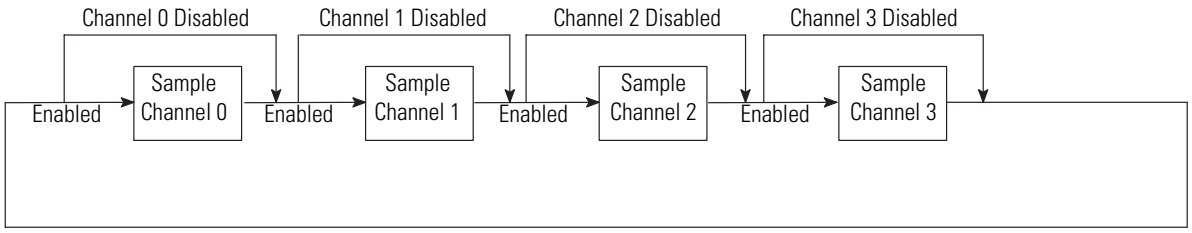

Table 3.5 shows the channel update times. The fastest module update time occurs when only one channel is enabled with a 500 Hz filter (4 ms). If more than one channel is enabled, the update time is faster if both channels have the same configuration. See the first example on page 3-9. The slowest module update time occurs when all four channels are enabled with different configurations. See the second example on page 3-9.

Table 3.5 Channel Update Time

Filter Frequency	Channel Update Time
50 Hz	22 ms
60 Hz	19 ms
250 Hz	6 ms
500 Hz	4 ms

Channel Switching and Reconfiguration Times

The table below provides the channel switching and reconfiguration times for a channel.

Table 3.6 Channel Switching and Reconfiguration Times

	Description	Duration			
		50 Hz	60 Hz	250 Hz	500 Hz
Channel Switching Time	The time it takes the module to switch from one channel to another.	46 ms	39 ms	14 ms	10 ms
Channel-to-Channel Reconfiguration Time	The time it takes the module to change its configuration settings for a difference in configuration between one channel and another.	116 ms	96 ms	20 ms	8 ms

Examples of Calculating Module Update Time

EXAMPLE

1. Two Channels Enabled with Identical Configurations

The following example calculates the 1769-IF4 module update time for two channels enabled with the same configuration and a 500 Hz filter.

Module Update Time = [Ch 0 Update Time + Ch 0 Switching Time] + [Ch 1 Update Time + Ch 1 Switching Time]

28 = [4 ms + 10 ms] + [4 ms + 10 ms]

EXAMPLE

2. Three Channels Enabled with Different Configurations

The following example calculates the module update time for three channels with the following configurations:

- Channel 0: ±10V dc with 60 Hz filter
- Channel 1: ±10V dc with 500 Hz filter
- Channel 2: 4 to 20 mA with 250 Hz filter

Module Update Time =[Ch 0 Reconfiguration Time + Ch 0 Update Time + Ch 0 Switching Time]

+

[Ch 1 Reconfiguration Time + Ch 1 Update Time + Ch 1 Switching Time]

+

[Ch 2 Reconfiguration Time + Ch 2 Scan Time + Ch 2 Switching Time]

216 = [96 ms + 19 ms + 39 ms] + [8 ms + 4 ms + 10 ms] + [20 ms + 6 ms + 14 ms]

Input Type/Range Selection

This selection along with proper input wiring lets you configure each channel individually for current or voltage ranges and provides the ability to read the current range selections.

Input Data Selection Formats

This selection configures channels 0 through 3 to present analog data in any of the following formats:

- Raw/Proportional Data
- Engineering Units
- Scaled-for-PID
- Percent Range

Raw/Proportional Data

The value presented to the controller is proportional to the selected input and scaled into the maximum data range allowed by the bit resolution of the A/D converter and filter selected. The full range for a ±10Vdc user input is -32767 to +32767. See Table 3.7 Valid Input Data on page 3-11.

Engineering Units

The module scales the analog input data to the actual current or voltage values for the selected input range. The resolution of the engineering units is dependent on the range selected and the filter selected. See Table 3.7 Valid Input Data on page 3-11.

Scaled-for-PID

The value presented to the controller is a signed integer with zero representing the lower user range and 16383 representing the upper user range. Allen-Bradley controllers, such as the MicroLogix 1500, use this range in their PID equations. The amount over and under user range (full scale range -410 to 16793) is also included. See Table 3.7 Valid Input Data on page 3-11.

Percent Range

The input data is presented as a percentage of the user range. For example, 0V to 10V dc equals 0% to 100%. See Table 3.7 on page 3-11.

TIP The ±10V dc range does not support the percent user range data format.

Valid Input Data Word Formats/Ranges

The following table shows the valid formats and min./max. data ranges provided by the module.

Table 3.7 Valid Input Data

1769-IF4 Input Range	Input Value	Example Data	Input Range Condition	Raw/Proportional Data	Engineering Unit	Scaled-for-PID	Percent Full Range
				Decimal Range	Decimal Range	Decimal Range	Decimal Range
-10V to +10V dc	Over 10.5V dc	+11.0V dc	Over-range	32767 (max.)	10500 (max.)	16793 (max.)	N/A
	+10.5V dc	+ 10.5V dc	Over-range	32767 (max.)	10500 (max.)	16793 (max.)	N/A
	-10V to +10V dc	+10.0V dc	Normal	31206	10000	16383	N/A
		0.0V dc	Normal	0	0	8192	N/A
		-10.0V dc	Normal	-31206	-10000	0	N/A
	-10.5Vdc	-10.5V dc	Under-range	-32767 (min.)	-10500 (min.)	-410 (min.)	N/A
	Under -10.5V dc	-11.0V dc	Under-range	-32767 (min.)	-10500 (min.)	-410 (min.)	N/A
0V to 5V dc	Over 5.25V dc	5.5V dc	Over-range	32767 (max.)	5250 (max.)	17202 (max.)	10500 (max.)
	5.25V dc	5.25V dc	Over-range	32767 (max.)	5250 (max.)	17202 (max.)	10500 (max.)
	0.0V dc to 5.0V dc	5.0V dc	Normal	31206	5000	16383	10000
		0.0V dc	Normal	0	0	0	0
	-0.5V dc	-0.5V dc	Under-range	-3121 (min.)	-500 (min.)	-1638 (min.)	-1000 (min.)
	Under -0.5V dc	-1.0V dc	Under-range	-3121 (min.)	-500 (min.)	-1638 (min.)	-1000 (min.)
0V to 10V dc	Over 10.5V dc	11.0V dc	Over-range	32767 (max.)	10500 (max.)	17202 (max.)	10500 (max.)
	+10.5V dc	10.5V dc	Over-range	32767 (max.)	10500 (max.)	17202 (max.)	10500 (max.)
	0.0V dc to 10.0V dc	10.0V dc	Normal	31206	10000	16383	10000
		0.0V dc	Normal	0	0	0	0
	-0.5V dc	-0.5V dc	Under-range	-1560 (min.)	-500 (min.)	-819 (min.)	-500 (min.)
	Under -5.0V dc	-1.0V dc	Under-range	-1560 (min.)	-500 (min.)	-819 (min.)	-500 (min.)
4 mA to 20 mA	Over 21.0 mA	22.0 mA	Over-range	32767 (max.)	21000 (max.)	17407 (max.)	10625 (max.)
	21.0 mA	21.0 mA	Over-range	32767 (max.)	21000 (max.)	17407 (max.)	10625 (max.)
	4.0 mA to 20.0 mA	20.0 mA	Normal	31206	20000	16383	10000
		4.0 mA	Normal	6241	4000	0	0
	3.2 mA	3.2 mA	Under-range	4993 (min.)	3200 (min.)	-819 (min.)	-500 (min.)
	Under 3.2 mA	0.0 mA	Under-range	4993 (min.)	3200 (min.)	-819 (min.)	-500 (min.)

Table 3.7 Valid Input Data

1769-IF4 Input Range	Input Value	Example Data	Input Range Condition	Raw/Proportional Data	Engineering Unit	Scaled-for-PID	Percent Full Range
				Decimal Range	Decimal Range	Decimal Range	Decimal Range
1.0V to 5V dc	Over 5.25V dc	5.5V dc	Over-range	32767 (max.)	5250	17407	10625
	+5.25V dc	5.25V dc	Over-range	32767 (max.)	5250	17407	10625
	1.0V to 5.0V dc	5.0V dc	Normal	31206	5000	16383	10000
		1.0V dc	Normal	6243	1000	1	1
	0.5V dc	0.5V dc	Under-range	3121 (min.)	500	-2048	-1250
	Under 0.5V dc	0.0V dc	Under-range	3121 (min.)	500	-2048	-1250
0 mA to 20 mA	Over 21.0 mA	22.0 mA	Over-range	32767	21000	17202	10500
	21.0 mA	21.0 mA	Over-range	32767	21000	17202	10500
	0.0 mA to 20.0 mA	20.0 mA	Normal	31206	20000	16383	10000
		0.0 mA	Normal	0	0	0	0
	Under 0.0 mA	0.0 mA	Under-range	0	0	0	0

Effective Resolution

The effective resolution for an input channel depends upon the filter frequency selected for that channel. The following tables provide the effective resolution for the four frequencies for each of the range selections.

Table 3.8 50Hz / 60Hz Effective Resolution

1769-IF4 Input Range	Raw/Proportional Data Over the Full Input Range		Engineering Units Over the Full Input Range		Scaled-For-PID Over the Full Input Range		Percent Over the Full Input Range	
	Bits and Engineering Units Resolution	Decimal Range and Count Value	Resolution	Decimal Range and Count Value	Resolution	Decimal Range and Count Value	Resolution	Decimal Range and Count Value
-10 to +10V dc	Sign +14 0.64 mV/ 2 counts	±32767 Count by 2	1.00 mV/ 1 count	±10500 Count by 1	1.22 mV/ 1 count	-410 to +16793 Count by 1	Not Applicable	Not Applicable
0 to +5V dc	Sign +13 0.64 mV/ 4 counts	-3121 to +32767 Count by 4	1.00 mV/ 1 count	-500 to +5250 Count by 1	0.92 mV/ 3 counts	-1638 to +17202 Count by 3	1.00 mV/ 2 counts	-1000 to +10500 Count by 2
0 to +10V dc	Sign +14 0.64 mV/ 2 counts	-1560 to +32767 Count by 2	1.00 mV/ 1 count	-500 to +10500 Count by 1	1.22 mV/ 2 counts	-819 to +17202 Count by 2	1.00 mV/ 1 count	-500 to +10500 Count by 1
+4 to +20 mA	Sign +14 1.28 µA/ 2 counts	+4993 to +32767 Count by 2	2.00 µA/ 2 counts	+3200 to +2100 Count by 2	1.95 µA/ 2 counts	-819 to +17407 Count by 2	1.60 µA/ 1 count	-500 to +10625 Count by 1
+1 to +5V dc	Sign +13 0.64 mV/ 4 counts	+3121 to +32767 Count by 4	1.00 mV/ 1 count	+500 to +5250 Count by 1	0.73 mV/ 3 counts	-2048 to +17407 Count by 3	0.80 mV/ 2 counts	-1250 to +10625 Count by 2
0 to +20 mA	Sign +14 1.28 µA/ 2 counts	0 to +32767 Count by 2	2.00 µA/ 2 counts	0 to +21000 Count by 2	2.44 µA/ 2 counts	0 to +17202 Count by 2	2.00 µA/ 1 count	0 to +10500 Count by 1

Table 3.9 250Hz Effective Resolution

1769-IF4 Input Range	Raw/Proportional Data Over the Full Input Range		Engineering Units Over the Full Input Range		Scaled-For-PID Over the Full Input Range		Percent Over the Full Input Range	
	Bits and Engineering Units Resolution	Decimal Range and Count Value	Resolution	Decimal Range and Count Value	Resolution	Decimal Range and Count Value	Resolution	Decimal Range and Count Value
-10 to +10V dc	Sign +11 5.13 mV/ 16 counts	±32767 Count by 16	6.00 mV/ 6 counts	±10500 Count by 6	6.10 mV/ 5 counts	-410 to +16793 Count by 5	Not Applicable	Not Applicable
0 to +5V dc	Sign +10 5.13 mV/ 32 counts	-3121 to +32767 Count by 32	6.00 mV/ 6 counts	-500 to +5250 Count by 6	5.19 mV/ 17 counts	-1638 to +17202 Count by 17	5.50 mV/ 11 counts	-1000 to +10500 Count by 11
0 to +10V dc	Sign +11 5.13 mV/ 16 counts	-1560 to +32767 Count by 16	6.00 mV/ 6 counts	-500 to +10500 Count by 6	5.49 mV/ 9 counts	-819 to +17202 Count by 9	6.00 mV/ 6 counts	-500 to +10500 Count by 6
+4 to +20 mA	Sign +11 10.25 µA/ 16 counts	+4993 to +32767 Count by 2	11.00 µA/ 11 counts	+3200 to +2100 Count by 11	10.74 µA/ 11 counts	-819 to +17407 Count by 11	11.20 µA/ 7 counts	-500 to +10625 Count by 7
+1 to +5V dc	Sign +10 5.13 mV/ 32 counts	+3121 to +32767 Count by 32	6.00 mV/ 6 counts	+500 to +5250 Count by 6	5.37 mV/ 22 counts	-2048 to +17407 Count by 22	5.20 mV/ 13 counts	-1250 to +10625 Count by 13
0 to +20 mA	Sign +11 10.25 µA/ 16 counts	0 to +32767 Count by 16	11.00 µA/ 11 counts	0 to +21000 Count by 11	10.99 µA/ 9 counts	0 to +17202 Count by 9	12.00 µA/ 6 counts	0 to +10500 Count by 6

Table 3.10 500 Hz Effective Resolution

1769-IF4 Input Range	Raw/Proportional Data Over the Full Input Range		Engineering Units Over the Full Input Range		Scaled-For-PID Over the Full Input Range		Percent Over the Full Input Range	
	Bits and Engineering Units Resolution	Decimal Range and Count Value	Resolution	Decimal Range and Count Value	Resolution	Decimal Range and Count Value	Resolution	Decimal Range and Count Value
-10 to +10V dc	Sign +9 20.51 mV/ 64 counts	±32767 Count by 64	21.00 mV/ 21 counts	±10500 Count by 21	20.75 mV/ 17 counts	-410 to +16793 Count by 17	Not Applicable	Not Applicable
0 to +5V dc	Sign +8 20.51 mV/ 128 counts	-3121 to +32767 Count by 128	21.00 mV/ 21 counts	-500 to +5250 Count by 21	20.75 mV/ 68 counts	-1638 to +17202 Count by 68	21.00 mV/ 42 counts	-1000 to +10500 Count by 42
0 to +10V dc	Sign +9 20.51 mV/ 64 counts	-1560 to +32767 Count by 64	21.00 mV/ 21 counts	-500 to +10500 Count by 21	20.75 mV/ 34 counts	-819 to +17202 Count by 34	21.00 mV/ 21 counts	-500 to +10500 Count by 21
+4 to +20 mA	Sign +9 41.02 µA/ 64 counts	+4993 to +32767 Count by 64	42.00 µA/ 42 counts	+3200 to +2100 Count by 42	41.02 µA/ 42 counts	-819 to +17407 Count by 42	41.60 µA/ 26 counts	-500 to +10625 Count by 26
+1 to +5V dc	Sign +8 20.51 mV/ 128 counts	+3121 to +32767 Count by 128	21.00 mV/ 21 counts	+500 to +5250 Count by 21	20.75 mV/ 84 counts	-2048 to +17407 Count by 84	20.8 mV/ 52 counts	-1250 to +10625 Count by 52
0 to +20 mA	Sign +9 41.02 µA/ 64 counts	0 to +32767 Count by 64	42.00 µA/ 42 counts	0 to +21000 Count by 42	41.51 µA/ 34 counts	0 to +17202 Count by 34	42.00 µA/ 21 counts	0 to +10500 Count by 21

1769-IF8 Input Module Addressing

The1769-IF8 memory map shows the output, input, and configuration tables for the 1769-IF8.

Figure 3.4 1769-IF8 Memory Map

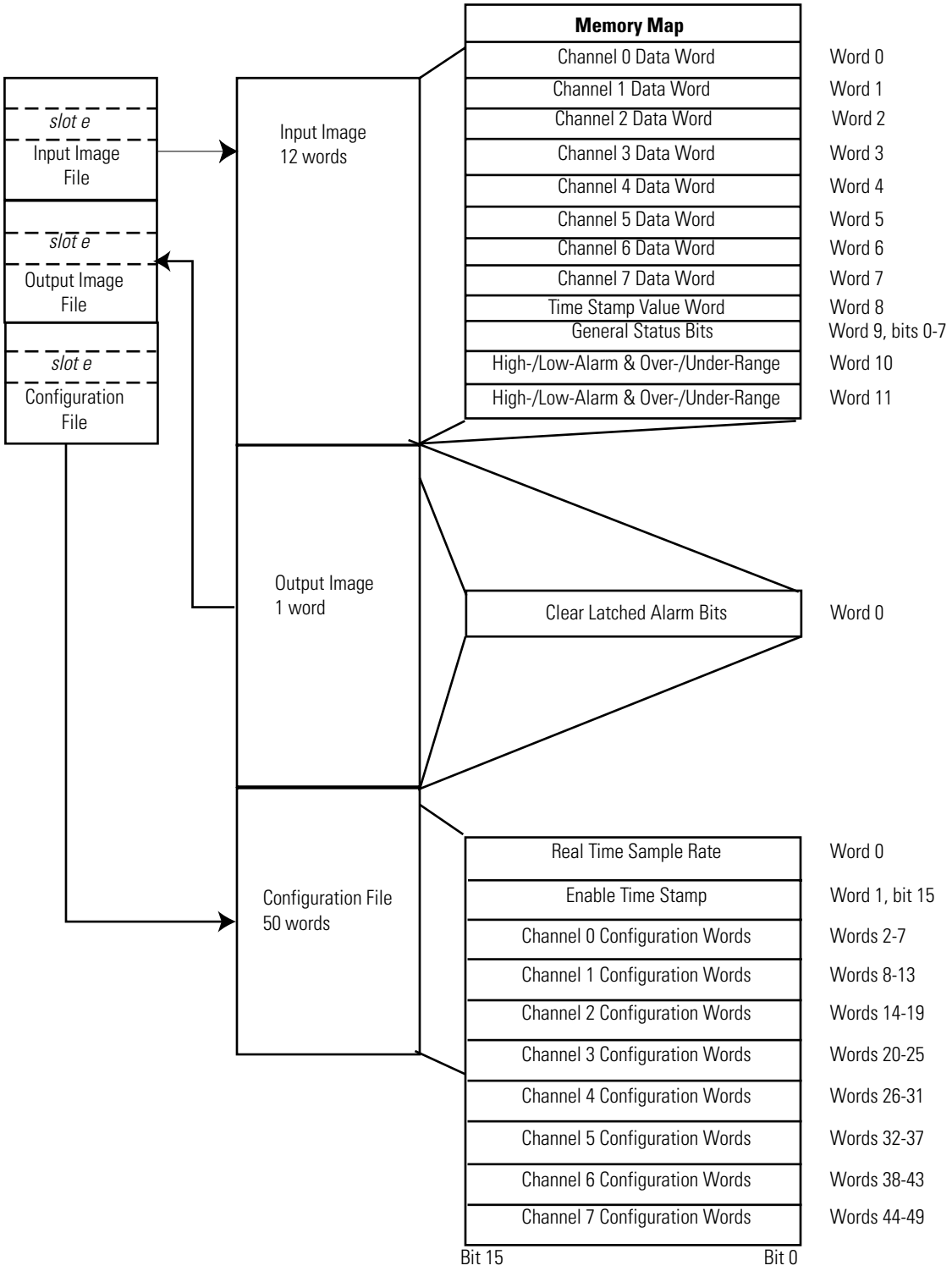

1769-IF8 Input Image

The 1769-IF8 input image file represents data words and status bits. Input words 0 through 7 hold the input data that represents the value of the analog inputs for channels 0 through 7. These data words are valid only when the channel is enabled and there are no errors. Input words 9 and 11 hold the status bits. To receive valid status information, the channel must be enabled.

TIP You can access information in the input image file using the programming software configuration screen.

1769-IF8 Output Image

The 1769-IF8 output image file contains the clear alarm control bits for the high- and low-alarm bits on each input channel. These bits are used to clear alarms when alarms are latched.

TIP You can access information in the output image file using the programming software configuration screen.

1769-IF8 Configuration File

The configuration file contains information that you use to define the way a specific channel functions. The configuration file is explained in more detail in 1769-IF8 Configuration Data File on page 3-20.

TIP Not all controllers support program access to the configuration file. Refer to your controller's user manual.

1769-IF8 Input Data File

The input data table lets you access analog input module read data for use in the control program, via word and bit access. The data table structure is shown in the table below. For each input module, slot x, words 0-7 in the input data file contain the analog values of the inputs.

Table 3.11 1769-IF8 Input Data Table

Word	Bit Position															
	15	14	13	12	11	10	9	8	7	6	5	4	3	2	1	0
0	SGN	Analog Input Data Channel 0														
1	SGN	Analog Input Data Channel 1														
2	SGN	Analog Input Data Channel 2														
3	SGN	Analog Input Data Channel 3														
4	SGN	Analog Input Data Channel 4														
5	SGN	Analog Input Data Channel 5														
6	SGN	Analog Input Data Channel 6														
7	SGN	Analog Input Data Channel 7														
8	Nu	Time Stamp Value														
9	Nu	Nu	Nu	Nu	Nu	Nu	Nu	Nu	S7	S6	S5	S4	S3	S2	S1	S0
10	L3	H3	U3	O3	L2	H2	U2	O2	L1	H1	U1	O1	L0	H0	U0	O0
11	L7	H7	U7	O7	L6	H6	U6	O6	L5	H5	U5	O5	L4	H4	U4	O4

1769-IF8 Input Data Values

Words 0 through 7 contain the converted analog input data from the field device. The most significant bit (MSB) is the sign bit, which is in two's complement format. (Nu indicates not used with the bit set to 0.)

General Status Bits (S0 through S7)

Word 9, bits 0 through 7 contain the general operational status bits for input channels 0 through 7. If set (1), these bits indicate an error associated with that channel. The over- and under-range bits and the high- and low-alarm bits for channels 0 through 7 are logically ORed to the appropriate general status bit.

Low Alarm Flag Bits (L0 through L7)

Word 10, bits 3, 7, 11, and 15 and Word 11, bits 3, 7, 11, 15 contain the low alarm flag bits for input channels 0 through 7. If set (1), these bits indicate the input signal is outside the user-defined range. The module continues to convert analog data to minimum full-range values. The bit is automatically reset (0) when the low alarm condition clears, unless the channel's alarm bits are latched. If the channel's alarm bits are latched, a set (1) low alarm flag bit clears via the corresponding Clear Alarm Latch bit in your output data file.

High Alarm Flag Bits (H0 through H7)

Word 10, bits 2, 6, 10, 14 and Word 11, bits 2, 6, 10, 14 contain the high alarm flag bits for input channels 0 through 7 and applies to all input types. If set (1), the input signal is output the user-defined range. The module continues to convert analog data to maximum full-range values. The bit is automatically reset (0) when the high alarm condition clears, unless the channel's alarm bits are latched. If the channel's alarm bits are latched, a set (1) high alarm flag bit clears via the corresponding Clear Alarm Latch bit in your output data file.

Over-Range Flag Bits (O0 through O7)

Over-range bits for channels 0 through 7 are contained in Word 10, bits 0, 4, 8, 12 and Word 11, bits 0, 4, 8, 12. They apply to all input types. When set (1), this bit indicates input signals beyond the normal operating range. However, the module continues to convert analog data to the maximum full range value. The bit is automatically reset (0) by the module when the over-range condition is cleared and the data value is within the normal operating range.

Under-Range Flag Bits (U0 through U7)

Under-range bits for channels 0 through 7 are contained in Word 10, bits 1, 5, 9, 13 and Word 11, bits 1, 5, 9, 13. They apply to all input types. When set (1), this bit indicates input signals below the normal operating range. It may also indicate an open circuit condition, when the module is configured for the 4 to 20 mA range. However, the module continues to convert analog data to the minimum full range value. The bit is automatically reset (0) by the module when the under-range condition is cleared and the data value is within the normal operating range.

Time Stamp Value (Word 8)

The 1769-IF8 supports a 15-bit rolling timestamp that is updated during each new sampling period of the analog inputs. The timestamp has a 1 ms resolution. The timestamp value is placed in the input image file, word 8, for each module input data update (if the timestamp function is enabled). Enable and/or disable this timestamp in the configuration file.

1769-IF8 Output Data File

The output data table lets you access analog output module write data for use in the control program, via word and bit access. The data table structure is shown in the table below.

Table 3.12 1769-IF8 Output Data Table

Word	Bit Position															
	15	14	13	12	11	10	9	8	7	6	5	4	3	2	1	0
0	CL[1] L7	CL[2] H7	CL L6	CL H6	CL L5	CL H5	CL L4	CL H4	CL L3	CL H3	CL L2	CL H2	CL L1	CL H1	CL L0	CL H0

(1) CL Lx = Cancel Low Process Alarm Latch x. This lets you individually cancel each low process alarm latch. Cancel = 1.

(2) CL Hx = Cancel High Process Alarm Latch x. This lets you individually cancel each high process alarm latch.

These bits are written during run mode to clear any latched low- and high-process alarms. The alarm is unlatched when the unlatch bit is set (1) and the alarm condition no longer exists. If the alarm condition persists, then the unlatch bit has no effect until the alarm condition no longer exists. You need to keep the unlatch bit set until verification from the appropriate input channel status word that the alarm status bit has cleared (0). Then you need to reset (0) the unlatch bit. The module will not latch an alarm condition if a transition from no alarm to alarm occurs while a channel's clear latch bit is set.

1769-IF8 Configuration Data File

The configuration file lets you determine how each individual input channel will operate. Parameters such as the input type and data format are set up using this file. This data file is writable and readable. The default value of the configuration data table is all zeros. The structure of the channel configuration file is shown below.

Table 3.13 1769-IF8 Configuration Data Table

Word	Bit Position															
	15	14	13	12	11	10	9	8	7	6	5	4	3	2	1	0
0	Real Time Sample Value															
1	ETS	Reserved														
2	EC	Reserved				EA	AL	EI[1]	Reserved				Input Filter Sel Chl0			
3	Reserved					Inpt Dta Fm Chl0			Reserved				Inpt Tp/RngeSel Chl0			
4	S	Process Alarm High Data Value Channel 0														
5	S	Process Alarm Low Data Value Channel 0														
6	S	Alarm Dead Band Value Channel 0														
7	Reserved															
8	EC	Reserved				EA	AL	EI[1]	Reserved				Inpt Filter Sel Chl1			
9	Reserved					Inpt Dta Fm Chl1			Reserved				Inpt Tp/RngeSel Chl1			
10	S	Process Alarm High Data Value Channel 1														
11	S	Process Alarm Low Data Value Channel 1														

Table 3.13 1769-IF8 Configuration Data Table

12	S	Alarm Dead Band Value Channel 1					
13	Reserved						
14	EC	Reserved	EA	AL	EI[1]	Reserved	Input Filter Sel Chl2
15	Reserved		Inpt Dta Fm Chl2			Reserved	Inpt Tp/RngeSel Chl2
16	S	Process Alarm High Data Value Channel 2					
17	S	Process Alarm Low Data Value Channel 2					
18	S	Alarm Dead Band Value Channel 2					
19	Reserved						
20	EC	Reserved	EA	AL	EI[1]	Reserved	Input Filter Sel Chl3
21	Reserved		Inpt Dta Fm Chl3			Reserved	Inpt Tp/RngeSel Chl3
22	S	Process Alarm High Data Value Channel 3					
23	S	Process Alarm Low Data Value Channel 3					
24	S	Alarm Dead Band Value Channel 3					
25	Reserved						
26	EC	Reserved	EA	AL	EI[1]	Reserved	Input Filter Sel Chl4
27	Reserved		Inpt Dta Fm Chl4			Reserved	Inpt Tp/RngeSel Chl4
28	S	Process Alarm High Data Value Channel 4					
29	S	Process Alarm Low Data Value Channel 4					
30	S	Alarm Dead Band Value Channel 4					
31	Reserved						
32	EC	Reserved	EA	AL	EI[1]	Reserved	Input Filter Sel Chl5
33	Reserved		Inpt Dta Fm Chl5			Reserved	Inpt Tp/RngeSel Chl5
34	S	Process Alarm High Data Value Channel 5					
35	S	Process Alarm Low Data Value Channel 5					
36	S	Alarm Dead Band Value Channel 5					
37	Reserved						
38	EC	Reserved	EA	AL	EI[1]	Reserved	Input Filter Sel Chl6
39	Reserved		Inpt Dta Fm Chl6			Reserved	Inpt Tp/RngeSel Chl6
40	S	Process Alarm High Data Value Channel 6					
41	S	Process Alarm Low Data Value Channel 6					
42	S	Alarm Dead Band Value Channel 6					
43	Reserved						
44	EC	Reserved	EA	AL	EI[1]	Reserved	Input Filter Sel Chl7
45	Reserved		Inpt Dta Fm Chl7			Reserved	Inpt Tp/RngeSel Chl7
46	S	Process Alarm High Data Value Channel 7					
47	S	Process Alarm Low Data Value Channel 7					
48	S	Alarm Dead Band Value Channel 7					
49	Reserved						

(1) CompactLogix L43 controllers will be able to support these interrupts.

The configuration file is typically modified using the programming software configuration screen. For information on configuring the module using MicroLogix 1500 and RSLogix 500, see Appendix B; for CompactLogix and RSLogix 5000, see Appendix C; for 1769-ADN DeviceNet Adapter and RSNetWorx, see Appendix D.

The configuration file can also be modified through the control program, if supported by the controller. The structure and bit settings are shown in Channel Configuration on page 3-22.

Channel Configuration

Each channel's configuration words consist of bit fields, the settings of which determine how the channel operates. See the table below and the descriptions that follow for valid configuration settings and their meanings. The default bit status of the configuration file is all zeros.

Table 3.14 Bit Definitions for Channel Configuration Words

Define	To Select	Make these bit settings												
		15	14	13	12	11	10	9	8	7-4	3	2	1	0
Input Filter Selection/ -3 dB Frequency	60 Hz										0	0	0	0
	50 Hz										0	0	0	1
	10 Hz										0	0	1	0
	250 Hz										0	0	1	1
	500 Hz										0	1	0	0
Enable Interrupt	Enable								1					
	Disable								0					
Process Alarm Latch	Enable							1						
	Disable							0						
Enable Process Alarms	Enable						1							
	Disable						0							
Enable Channel	Enable	1												
	Disable	0												

Table 3.15 Bit Definitions for Input Range and Input Data

Define	Indicate this	These bit settings								
		15-11	10	9	8	7-4	3	2	1	0
Input Range Select	-10 to +10V dc						0	0	0	0
	0 to 5V dc						0	0	0	1
	0 to 10V dc						0	0	1	0
	4 to 20 mA						0	0	1	1
	1 to 5V dc						0	1	0	0
	0 to 20 mA						0	1	0	1
Input Data Format Select	Raw/Proportional Counts		0	0	0					
	Engineering Units		0	0	1					
	Scaled for PID		0	1	0					
	Percent Range		0	1	1					

Enable/Disable Channel

This configuration selection lets each channel to be individually enabled.

TIP When a channel is not enabled (0), no voltage or current input is provided to the controller by the A/D converter.

Input Filter Selection

The input filter selection field lets you select the filter frequency for each channel and provides system status of the input filter setting for analog input channels 0 through 3. The filter frequency affects the noise rejection characteristics, as explained below. Select a filter frequency considering acceptable noise and step response time.

Noise Rejection

The 1769-IF8 uses a digital filter that provides noise rejection for the input signals. The filter is programmable, allowing you to select from four filter frequencies for each channel. The digital filter provides -3 db (50% amplitude) attenuation at the selected filter frequency. A lower frequency (60 Hz versus 250 Hz) can provide better noise rejection but it increases channel update time. Transducer power supply noise, transducer circuit noise, or process variable irregularities may also be sources of normal mode noise.

Common Mode Rejection is better than 60 dB at 50 and 60 Hz, with the 50 and 60 Hz filters selected, respectively. The module performs well in the presence of common mode noise as long as the signals applied to the user plus and minus input terminals do not exceed the common mode voltage rating (± 10 V) of the module. Improper earth ground may be a source of common mode noise.

Channel Step Response

The selected channel filter frequency determines the channel's step response. The step response is the time required for the analog input signal to reach 100% of its expected final value. This means that if an input signal changes faster than the channel step response, a portion of that signal will be attenuated by the channel filter.

Channel Cut-Off Frequency

The -3 dB frequency is the filter cut-off frequency. The cut-off frequency is defined as the point on the frequency response curve where frequency components of the input signal are passed with 3 dB of attenuation. All input frequency components at or below the cut-off frequency are passed by the digital filter with less than 3 dB of attenuation. All frequency components above the cut-off frequency are increasingly attenuated.

The cut-off frequency for each channel is defined by its filter frequency selection and is equal to the filter frequency setting. Choose a filter frequency so that your fastest changing signal is below that of the filter's cut-off frequency. The cut-off frequency should not be confused with the update time. The cut-off frequency relates to how the digital filter attenuates frequency components of the input signal. The update time defines the rate at which an input channel is scanned and its channel data word is updated.

Module Update Time and Scanning Process

The module update time is defined as the time required for the module to sample and convert the input signals of all enabled input channels and provide the resulting data values to the processor. Module update time can be calculated by adding the sum of all enabled channel times. Channel times include channel scan time, channel switching time, and reconfiguration time. The module sequentially samples the channels in a continuous loop.

The 1769-IF8 uses two parallel sampling loops as shown in Figure 3.5 to update the entire module (all 8 channels) in an amount of time equal to only four channel update times. The module performs parallel channel sampling on pairs of inputs. Channels 0 and 4 are a pair. The other input channel pairs are 1 and 5, 2 and 6, and 3 and 7.

Figure 3.5 Sequential Sampling

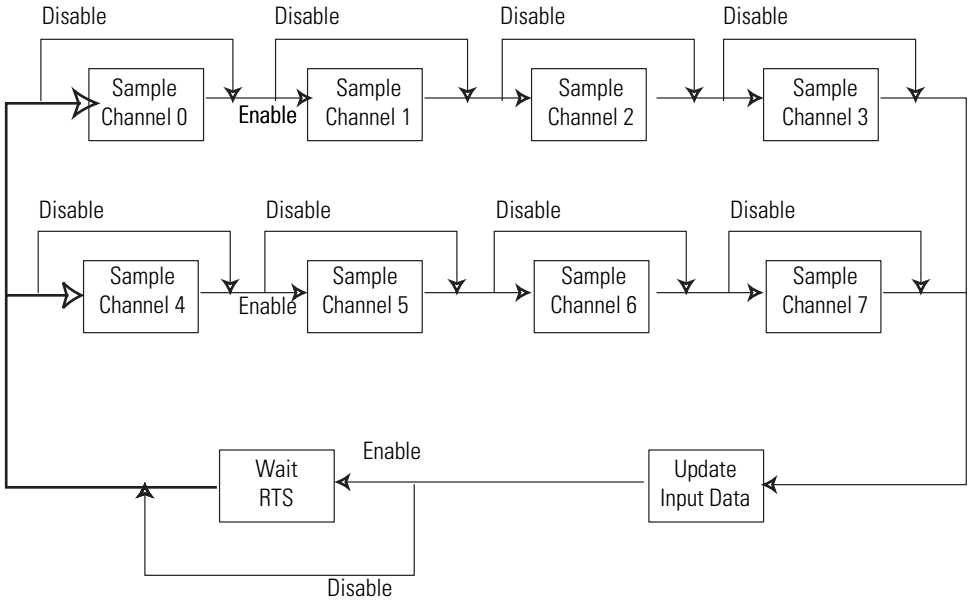

Module update time is calculated as follows:

- Slowest channel update time of pair 0 and 4 (determined by the filter setting selected for each channel and the channel update times from Table 3.16 - channel update time for a channel that is not enabled is equal to 0)

  PLUS

- Slowest channel update time of pair 1 and 5

  PLUS

- Slowest channel update time of pair 2 and 6

  PLUS

- Slowest channel update time of pair 3 and 7

If you use real-time sampling, the user-configured sample rate is used as the module update time.

Table 3.16 Filter Frequency and Update Times

Filter Frequency	Update Time per Channel	Update Time per Module[1]
10 Hz	100 ms	400 ms
50 Hz	30 ms	120 ms
60 Hz	30 ms	120 ms
250 Hz	9 ms	36 ms
500 Hz	6 ms	24 ms

(1) Module update time applies if you use all channel pairs and all enabled channels, and all the enabled channels use the filter frequency from the first column.

Examples of Calculating Module Update Time

EXAMPLE

1. Two Channels Enabled with Identical Filter Setting, But Not a Channel Pair

The following example calculates the 1769-IF8 module update time for two channels enabled with any configuration and a 500 Hz filter but the enabled channels are not a channel pair.

- Channel 0: ±10V dc with 500 Hz filter
- Channel 1: 0…10V dc with 500 Hz filter

Module Update Time = [Greater of Channel 0 Update Time or Channel 4 Update Time]
+ [Greater of Channel 1 Update Time or Channel 5 Update Time]

12 ms = [Greater of 6 ms or 0 ms] + [Greater of 6 ms or 0 ms]

EXAMPLE

2. Two Channels Enabled with Different Filter Settings, But are a Channel Pair

The following example calculates the 1769-IF8 module update time for two channels enabled with any configuration, with different filter settings, but are a channel pair.

- Channel 0: ±10V dc with 60 Hz filter
- Channel 4: 0…10V dc with 500 Hz filter

Module Update Time = [Greater of Channel 0 Update Time or Channel 4 Update Time]

30 ms = [Greater of 30 ms or 6 ms]

IMPORTANT

Configuring the 1769-IF8 module to take advantage of channel pairs can result in module update times that are significantly faster than configuring the 1769-IF8 modules without such channel assignment optimization.

Input Type/Range Selection

This selection along with proper input wiring lets you configure each channel individually for current or voltage ranges and provides the ability to read the configured range selections.

Input Data Selection Formats

This selection configures channels 0 through 3 to present analog data in any of the following formats:

- Raw/Proportional Data
- Engineering Units
- Scaled-for-PID
- Percent Range

Raw/Proportional Data

The value presented to the controller is proportional to the selected input and scaled into the maximum data range allowed by the bit resolution of the A/D converter and filter selected. The full range for a ±10Vdc user input is -32767 to +32767. See Table 3.17 Valid Input Data on page 3-28.

Engineering Units

The module scales the analog input data to the actual current or voltage values for the selected input range. The resolution of the engineering units is dependent on the range selected and the filter selected. See Table 3.17 Valid Input Data on page 3-28.

Scaled-for-PID

The value presented to the controller is a signed integer with zero representing the lower user range and 16383 representing the upper user range. Allen-Bradley controllers, such as the MicroLogix 1500, use this range in their PID equations. The amount over and under user range (full scale range -410 to 16793) is also included. See Table 3.17 Valid Input Data on page 3-28.

Percent Range

The input data is presented as a percentage of the user range. For example, 0V to 10V dc equals 0% to 100%. See Table 3.17 on page 3-28.

Valid Input Data Word Formats/Ranges

The following table shows the valid formats and min./max. data ranges provided by the module.

Table 3.17 Valid Input Data

<table>
<tr><th rowspan="2">1769-IF8 Normal Operating Input Range</th><th rowspan="2">Full Range (Includes amounts Over and Under Normal Operating Range)</th><th>Raw/Proportional Data</th><th>Engineering Units</th><th colspan="2">Scaled-for-PID</th><th colspan="2">Percent</th></tr>
<tr><th colspan="2">Full Range</th><th>Normal Operating Range</th><th>Full Range</th><th>Normal Operating Range</th><th>Full Range</th></tr>
<tr><td>-10V to +10V dc</td><td>+10.5V to -10.5V</td><td>-32767 to +32767</td><td>-10500 to +10500</td><td rowspan="6">0 to 16383</td><td>-410 to 16793</td><td>-100 to +100%</td><td>-105.00 to 105.00%</td></tr>
<tr><td>0V to 5V dc</td><td>0.0V to 5.25V</td><td>-27068 to +32767</td><td>0 to 5250</td><td rowspan="2">0 to 17202</td><td rowspan="5">0 to 100%</td><td rowspan="2">0 to 105.00%</td></tr>
<tr><td>0V to 10V dc</td><td>0.0V to 10.5V</td><td>-29788 to +32767</td><td>0 to 10500</td></tr>
<tr><td>4 mA to 20 mA</td><td>3.2 mA to 21 mA</td><td rowspan="3">-32767 to +32767</td><td>3200 to 21000</td><td>-819 to +17407</td><td>-5.00 to +106.25%</td></tr>
<tr><td>1.0V to 5V dc</td><td>0.5V to 5.25V</td><td>500 to 5250</td><td>-2048 to 17407</td><td>-12.50 to +106.25%</td></tr>
<tr><td>0 mA to 20 mA</td><td>0 mA to 21 mA</td><td>0 to 21000</td><td>0 to 17202</td><td>0.00 to 105.00%</td></tr>
</table>

1769-IF8 Real Time Sampling

This parameter instructs the module how often to scan its input channels and obtain all available data. After the channels are scanned, the module places the data into the Input Data file. This feature is applied on a module-wide basis.

During module configuration, you specify a Real Time Sampling (RTS) period by entering a value into Word 0 of the Configuration Data file. This value entered in Word 0 can be in the range of 0 to 5000 and indicates the sampling rate the module will use in 1 ms increments.

If you enter a 0 for the Real Time Sample Rate, the module should scan its inputs at as fast a rate as possible, controlled by the number of enabled channels and the filter setting selected for those channels.

The module compares the Real Time Sample Rate value entered in Word 0 of the Configuration Data file with a calculated module update time, again based on the number of enabled channels and the filter setting selected for those channels. If the value entered for the Real Time Sample Rate is smaller than the calculated module update time, the module indicates a configuration error.

The longest Real Time Sample Rate supported by the 1769-IF8 is 5 s, the maximum value for Word 0 of the Configuration Data file is 5000 decimal.

1769-IF8 Process Alarms

Process alarms alert you when the module has exceeded configured high or low limits for **each channel**. You can latch process alarms. These are set at two user configurable alarm trigger points:

- Process Alarm High
- Process Alarm Low

Each input channel's process alarms are controlled by bits in the Configuration Data file. Enable alarms for a channel by setting (1) the EA bit for that channel. Set the AL bit (1) for a channel to enable the alarm latching.

Each channel's process alarm high data value and process alarm low data value are set by entering values in the corresponding words of the Configuration Data file for that channel.

The values entered for a channel's process alarm data values must be within the normal operating data range as set by the input Data Format selected for that channel. If a process alarm data value is entered that is outside the normal operating data range set for a channel, the module indicates a configuration error.

Alarm Deadband

You may configure an **Alarm Deadband** to work with the process alarms. The deadband lets the process alarm status bit to remain set, despite the alarm condition disappearing, as long as the input data remains within the deadband of the process alarm.

Figure 3.6 shows input data that sets each of the two alarms at some point during module operation. In this example, Latching is disabled; therefore, each alarms turns OFF when the condition that caused it to set ceases to exist.

Figure 3.6 Alarm Deadbands

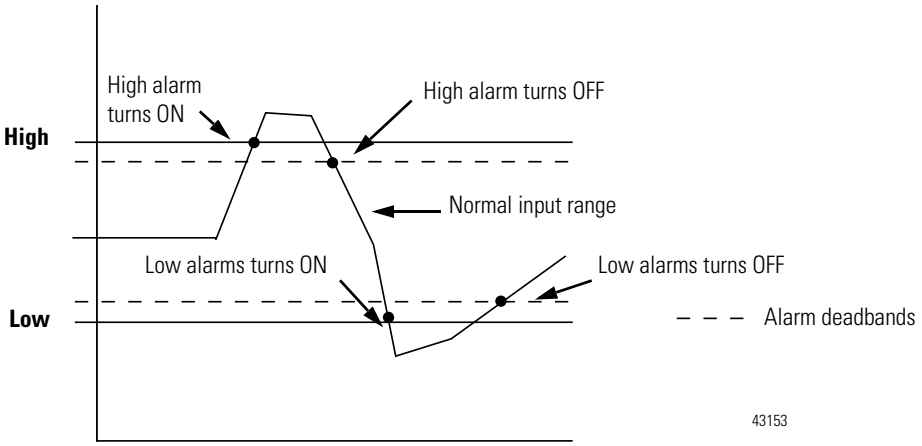

The value entered for a channel's alarm deadband value must be within the normal operating data range as set by the Input Data Format selected for that channel. If an alarm deadband value is entered that is outside the normal operating data range set for a channel, the module indicates a configuration error.

The module also checks for an alarm deadband value that is less than 0 or large enough to exceed one or both of the channel's full range limits. When one of these conditions occurs, the module changes the alarm deadband value that is in violation to one that is allowed. A deadband value less than 0 is set at 0. A deadband value that when added to the process alarm low data value or subtracted from the process alarm high data value results in a value that exceeds the full range limits of the channel is adjusted to the first, smaller value that eliminates this full range violation.

Notes:

Module Data, Status, and Channel Configuration for the Output Modules

This chapter examines the analog output module's output data file, input data file, channel status, and channel configuration words.

1769-OF2 Output Module Memory Map

The 1769-OF2 memory map shows the output, input, and configuration tables for the 1769-OF2.

Figure 4.1 1769-OF2 Memory Map

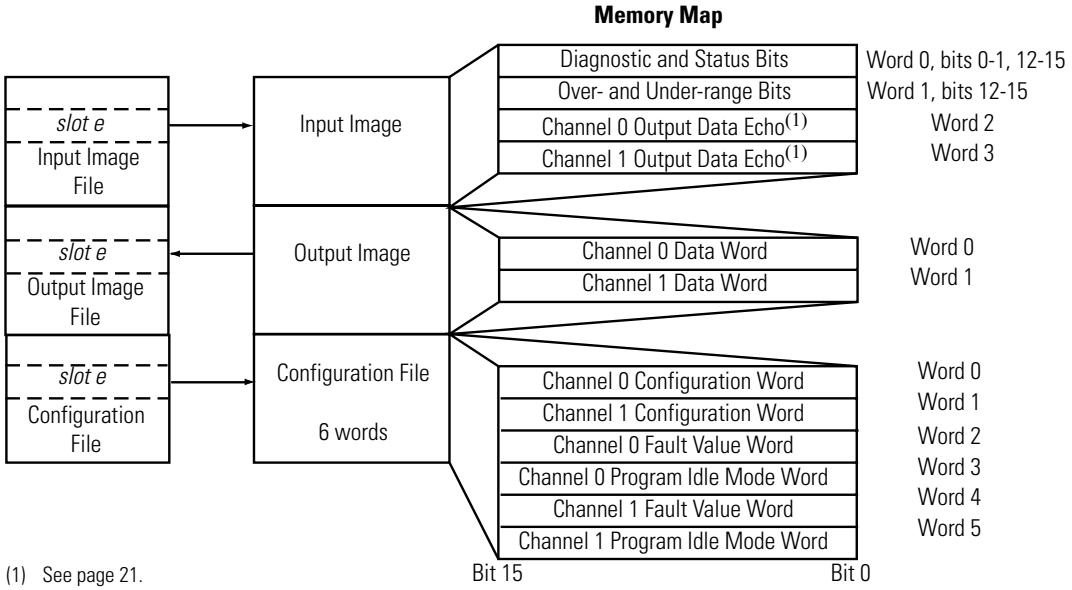

(1) See page 21.

1769-OF2 Output Data File

The structure of the output data file is shown in the table below. Words 0 and 1 contain the converted analog output data for channels 0 and 1, respectively. The most significant bit is the sign bit.

Table 4.1 1769-OF2 Output Data Table

Word/Bit	15	14	13	12	11	10	9	8	7	6	5	4	3	2	1	0
Word 0	SGN	Analog Output Data Channel 0														
Word 1	SGN	Analog Output Data Channel 1														

1769-OF2 Input Data File

This data table file provides immediate access to channel diagnostic information and analog output data at the module for use in the control program. To receive valid data, you must enable the channel. The data table structure is described below.

Table 4.2 1769-OF2 Input Data Table

Word/Bit	15	14	13	12	11	10	9	8	7	6	5	4	3	2	1	0
Word 0	D0	H0	D1	H1	Not Used (bits set to 0)										S1	S0
Word 1	U0	O0	U1	O1	Bits 0 - 11 set to 0											
Word 2	SGN	Channel 0 - Output Data Loopback/Echo														
Word 3	SGN	Channel 1 - Output Data Loopback/Echo														

1769-OF2 Diagnostic Bits (D0 and D1)

When set (1), these bits indicate a broken output wire or high load resistance (not used on voltage outputs). Bit 15 represents channel 0; bit 13 represents channel 1.

1769-OF2 Hold Last State Bits (H0 and H1)

These bits indicate when channel 0 (bit 14) or channel 1 (bit 12) is in a hold last state condition. When one of these bits is set (1), the corresponding channel is in the hold state. Output data will not change until the condition which caused the hold last state to occur is removed. The bit is reset (0) for all other conditions.

TIP MicroLogix 1500 controllers **do not** support the hold last state function. Refer to your controller's user manual for details.

1769-OF2 Over-Range Flag Bits (O0 and O1)

Over-range bits for channels 0 and 1 are contained in word 1, bits 14 and 12. When set, the over-range bit indicates that the controller is attempting to drive the analog output above its normal operating range. However, the module continues to convert analog output data to a maximum full range value. The bit is automatically reset (0) by the module when the over-range condition is cleared (the output is within the normal operating range). The over-range bits apply to all output ranges. Refer to Table 4.5 1769-OF2 Valid Output Data Table on page 4-12 to view the normal operating and over-range areas.

1769-OF2 Under-Range Flag Bits (U0 and U1)

Under-range bits for channels 0 and 1 are contained in word 1, bits 15 and 13. When set (1), the under-range bit indicates that the controller is attempting to drive the analog output below its normal operating range. However, the module continues to convert analog output data to a minimum full range value. The bit is automatically reset (0) by the module when the under-range condition is cleared (the output is within the normal operating range). The under-range bits apply to all output ranges. Refer to Table 4.5 1769-OF2 Valid Output Data Table on page 4-12 to view the normal operating and under-range areas.

1769-OF2 General Status Bits (S0 and S1)

Word 0, bits 0 and 1 contain the general status information for output channels 0 and 1. If set (1), these bits indicate an error associated with that channel. The over-range and under-range bits and the diagnostic bit are logically ORed to this position.

1769-OF2 Output Data Loopback/Echo

Words 2 and 3 provide output loopback/data echo through the input array for channels 0 and 1, respectively. The value of the data echo is the analog value currently being converted on-board the module by the D/A converter. This ensures that the logic-directed state of the output is true. Otherwise, the state of the output could vary depending on controller mode.

Under normal operating conditions, the data echo value is the same value that is being sent from the controller to the output module. Under abnormal conditions, the values may differ. For example:

1. During run mode, the control program could direct the module to a value over or under the defined full range. In that case, the module raises the over- or under-range flag and continues to convert and data echo up to the defined full range. However, upon reaching either the maximum upper or lower full range value, the module stops converting and echoes back that maximum upper or lower full range value, not the value being sent from the controller.

2. During program or fault mode with Hold Last State or User-Defined Value selected, the module echoes the hold last value or alternate value you selected. For more information on the hold last and user-defined values, see 1769-OF2 Fault Value (Channel 0 and 1) on page 4-11 and 1769-OF2 Program/Idle Value (Channel 0 and 1) on page 4-11.

1769-OF2 Configuration Data File

The configuration file lets you determine how each individual output channel will operate. Parameters such as the output type/range and data format are set up using this file. The configuration data file is writable and readable. The default value for the configuration data file is all zeros. The structure of the channel configuration file is explained below. Words 0 and 1 are the channel configuration words for channels 0 and 1. They are described in 1769-OF2 Channel Configuration on page 4-6. Words 2 through 5 are explained beginning on page 4-11.

Table 4.3 1769-OF2 Configuration Data Table[1]

Word/Bit	15	14	13	12	11	10	9	8	7	6	5	4	3	2	1	0
Word 0	E	Output Data Format Select Channel 0			Output Type/Range Select Channel 0				Not Used (set to 0)				FM0	PM0	Not Used (set to 0)	PFE0
Word 1	E	Output Data Format Select Channel 1			Output Type/Range Select Channel 1				Not Used (set to 0)				FM1	PM1	Not Used (set to 0)	PFE1
Word 2	S	Fault Value - Channel 0														
Word 3	S	Program (Idle) Value - Channel 0														
Word 4	S	Fault Value - Channel 1														
Word 5	S	Program (Idle) Value - Channel 1														

(1) The ability to change these values using your control program is not supported by all controllers. Refer to your controller manual for details.

The configuration file is typically modified using the programming software configuration screen. For information on configuring the module using MicroLogix 1500 and RSLogix 500, see Appendix B; for CompactLogix and RSLogix 5000, see Appendix C; for 1769-ADN DeviceNet Adapter and RSNetWorx, see Appendix D.

The configuration file can also be modified through the control program, if supported by the controller. The structure and bit settings are shown in 1769-OF2 Channel Configuration on page 4-6.

1769-OF2 Channel Configuration

Both channel configuration words (0 and 1) consist of bit fields, the settings of which determine how the corresponding channel operates. See the table below and the descriptions that follow for valid configuration settings and their meanings.

Table 4.4 1769-OF2 Bit Definitions for Channel Configuration Words 0 and 1

Bit(s)	Define	These bit settings																Indicate this
		15	14	13	12	11	10	9	8	7	6	5	4	3	2	1	0	
0	Program/Idle to Fault Enable									Not Used							0	Program Mode Data Applied
																	1	Fault Mode Data Applied
1	Reserved																	Reserved
2	Program/Idle Mode														0			Program Mode Hold Last State
															1			Program Mode User-Defined Value
3	Fault Mode													0				Fault Mode Hold Last State
														1				Fault Mode User-Defined Value
4-7	Reserved																	Reserved[1]
8-11	Output Type/Range Select					0	0	0	0									-10V dc to +10V dc
						0	0	0	1									0 to 5V dc
						0	0	1	0									0 to 10V dc
						0	0	1	1									4 to 20 mA
						0	1	0	0									1 to 5V dc
						0	1	0	1									0 to 20 mA
																		Not Used[2]
12-14	Output Data Format Select		0	0	0													Raw/Proportional Data
			0	0	1													Engineering Units
			0	1	0													Scaled-for-PID[3]
			0	1	1													Percent Range
																		Not Used[2]
15	Enable Channel	1																Enabled
		0																Disabled

(1) If reserved bits are not equal to zero, a configuration error occurs.

(2) Any attempt to write a non-valid (not used) bit configuration into any selection field results in a module configuration error. See Configuration Errors on page 5-6.

(3) This range is applicable to the PID function of the MicroLogix 1500 packaged controller, PLC, or SLC controllers. Logix controllers can use this or one of the other ranges for their PID functions.

1769-OF2 Enable/Disable Channel

This configuration selection (bit 15) lets each channel to be individually enabled.

TIP A channel that is not enabled has zero voltage or current at its terminal.

1769-OF2 Output Data Format Selection

This selection configures each channel to interpret data presented to it by the controller in any of the following formats:

- Raw/Proportional Data
- Engineering Units
- Scaled-for-PID
- Percent Full Range

1769-OF2 Raw/Proportional Data

The control program presents the maximum raw data value allowed by the bit resolution of the D/A converter. The full range for a ±10V dc user input is -32767 to +32767. See Table 4.5 1769-OF2 Valid Output Data Table on page 4-12.

1769-OF2 Engineering Units

The control program presents an engineering data value to the module within the current or voltage range allowed by the D/A converter. The module then scales the data to the appropriate analog output value for the selected user range. See Table 4.5 1769-OF2 Valid Output Data Table on page 4-12.

1769-OF2 Scaled-for-PID

The control program presents an integer value to the module, with zero representing the lower user range and 16383 representing the upper user range, for conversion by the D/A converter. The module then scales this data to the approximate analog output value for the selected user range. See Table 4.5 1769-OF2 Valid Output Data Table on page 4-12.

TIP Allen-Bradley controllers, such as the MicroLogix 1500, use this range in their PID equations for controlled process outputs.

1769-OF2 Percent Full Range

The control program presents the analog output data to the module as a percent of the full analog output range (for example, valve 50% open). The module scales this data to the appropriate analog output value for the selected user range. For example, 0 to 100% equals 0 to 10V dc. See Table 4.5 1769-OF2 Valid Output Data Table on page 4-12.

TIP The ±10V dc range does not support percent full range.

1769-OF2 Output Type/Range Selection

This selection, along with proper output wiring, lets you configure each output channel individually for current or voltage ranges, and provides the ability to read the range selection.

1769-OF2 Fault Mode (FM0 and FM1)

This configuration selection provides individual fault mode selection for analog output channels 0 (word 0, bit 3) and 1 (word 1, bit 3). When this selection is disabled [the bit is reset (0)] and the system enters the fault mode, the module *holds* the *last* output *state* value. This means that the analog output remains at the last converted value prior to the condition that caused the system to enter the fault mode.

IMPORTANT Hold last state is the default condition for the 1769-OF2 during a control system run-to-fault mode change.

TIP MicroLogix 1500™ does not support the analog output module's default hold last state function and resets analog outputs to zero when the system enters the fault mode.

If this selection is enabled [the bit is set (1)] and the system enters the fault mode, it commands the module to convert the *user-specified* integer value from the channel's fault value word (2 or 4) to the appropriate analog output for the range selected. If the default value, 0000, is entered, the output typically converts to the minimum value for the range selected.

EXAMPLE

- If the raw/proportional or engineering units data format is selected and zero (0000) is entered in the ±10V dc operating range, the resulting value would be 0V dc.
- If the raw/proportional or engineering units format is selected and zero is entered as the fault value in either a 1 to 5V dc or 4 to 20 mA range, a configuration error results.
- See Table 4.5 1769-OF2 Valid Output Data Table on page 4-12 for more examples.

TIP

Not all controllers support this function. Refer to your controller's user manual for details.

1769-OF2 Program/Idle Mode (PM0 and PM1)

This configuration selection provides individual program/idle mode selection for the analog channels 0 (word 0, bit 2) and 1 (word 1, bit 2). When this selection is disabled [the bit is reset (0)], the module *holds* the *last state*, meaning that the analog output remains at the last converted value prior to the condition that caused the control system to enter the program mode.

IMPORTANT

Hold last state is the default condition for the 1769-OF2 during a control system run-to-program mode change.

TIP

MicroLogix 1500™ does not support the analog output module's default hold last state function and resets analog outputs to zero when the system enters the program mode.

If this selection is enabled [the bit is set (1)] and the system enters the program mode, it commands the module to convert the *user-specified* value from the channel's program/idle value word (3 or 5) to the appropriate analog output for the range selected.

EXAMPLE

- If the default value, 0000, is used and the range selected is 0 to 20 mA, the module will output 0 mA for all data formats.
- If the raw/proportional or engineering units format is selected and zero is entered as the program/idle value in either a 1 to 5V dc or 4 to 20 mA range, a configuration error results.
- See Table 4.5 1769-OF2 Valid Output Data Table on page 4-12 for more examples.

TIP Not all controllers support this function. Refer to your controller's user manual for details.

1769-OF2 Program/Idle to Fault Enable (PFE0 and PFE1)

If a system currently in program/idle mode faults, this setting (word 0, bit 0; word 1, bit 0) determines whether the program/idle or fault mode value is applied to the output. If the selection is enabled [the bit is set (1)], the module applies the fault mode data value. If the selection is disabled [the bit is reset (0)], the module applies the program/idle mode data value. The default setting is disabled.

TIP Not all controllers support this function. Refer to your controller's user manual for details.

1769-OF2 Fault Value (Channel 0 and 1)

Using words 2 and 4 for channels 0 and 1, you can specify the values the outputs will assume when the system enters the fault mode. The default value is 0. Valid values are dependent upon the range selected in the range selection field. If the value you entered is outside the normal operating range for the output range selected, the module generates a configuration error.

For example, if you select engineering units for the ±10V dc range and enter a fault value within the normal operating range (0 to 10000), the module will configure and operate correctly. However, if you enter a value outside the normal operating range (for example 11000), the module indicates a configuration error.

TIP Not all controllers support this function. Refer to your controller's user manual for details.

1769-OF2 Program/Idle Value (Channel 0 and 1)

Use words 3 and 5 to set the integer values for the outputs to assume when the system enters the program mode. The values are dependent upon the range selected in the range selection field. If the value you entered is outside the normal operating range for the output range selected, the module generates a configuration error. The default value is 0.

TIP Not all controllers support this function. Refer to your controller's user manual for details.

1769-OF2 Valid Output Data Word Formats/Ranges

The following table shows the valid formats and data ranges accepted by the module.

Table 4.5 1769-OF2 Valid Output Data Table

OF2 Output Range	Input Value	Example Data		Output Range State	Raw/Proportional Data		Engineering Unit		Scaled-for-PID		Percent Full Range	
					Decimal Range		Decimal Range		Decimal Range		Decimal Range	
		Controller Ordered	OF2 Output		Controller Ordered	OF2 Output and Echo	Controller Ordered	OF2 Output and Echo	Controller Ordered	OF2 Output and Echo	Controller Ordered	OF2 Output and Echo
±10V dc	Over 10.5V dc	+11.0V dc	+10.5V dc	Over	N/A	N/A	11000	10500	17202	16793	N/A	N/A
	+10.5V dc	+10.5V dc	+10.5V dc	Over	32767	32767	10500	10500	16793	16793	N/A	N/A
	-10V to +10V dc	+10.0V dc	+10.0V dc	Normal	31207	31207	10000	10000	16383	16383	N/A	N/A
		0.0V dc	0.0V dc	Normal	0	0	0	0	8192	8192	N/A	N/A
		-10.0V dc	-10.0V dc	Normal	-31207	-31207	-10000	-10000	0	0	N/A	N/A
	-10.5V dc	-10.5V dc	-10.5V dc	Under	-32767	-32767	-10500	-10500	-410	-410	N/A	N/A
	Under -10.5V dc	-11.0V dc	-11.0V dc	Under	N/A	N/A	-11000	-10500	-819	-410	N/A	N/A
0V to 5V dc	Over 5.25V dc	5.5V dc	+5.25V dc	Over	N/A	N/A	5500	5250	18021	17202	11000	10500
	5.25V dc	5.25V dc	+5.25V dc	Over	32767	32767	5250	5250	17202	17202	10500	10500
	0.0V dc to 5.0V dc	5.0V dc	+5.0V dc	Normal	31207	31207	5000	5000	16383	16383	10000	10000
		0.0V dc	0.0V dc	Normal	0	0	0	0	0	0	0	0
	-0.5V dc	-0.5V dc	-0.5V dc	Under	-3121	-3121	-500	-500	-1638	-1638	-1000	-1000
	Under -0.5V dc	-1.0V dc	-0.5V dc	Under	-6241	-3121	-500	-500	-3277	-1638	-2000	-1000

Table 4.5 1769-OF2 Valid Output Data Table

OF2 Output Range	Input Value	Example Data		Output Range State	Raw/Proportional Data		Engineering Unit		Scaled-for-PID		Percent Full Range	
					Decimal Range		Decimal Range		Decimal Range		Decimal Range	
		Controller Ordered	OF2 Output		Controller Ordered	OF2 Output and Echo	Controller Ordered	OF2 Output and Echo	Controller Ordered	OF2 Output and Echo	Controller Ordered	OF2 Output and Echo
0V to 10V dc	Over 10.5V dc	11.0V dc	+10.5V dc	Over	N/A	N/A	11000	10500	18021	17202	11000	10500
	+10.5V dc	+10.5V dc	+10.5V dc	Over	32767	32767	10500	10500	17202	17202	10500	10500
	0.0V dc to 10.0V dc	+10.0V dc	+10.0V dc	Normal	31207	31207	10000	10000	16383	16383	10000	10000
		0.0V dc	0.0V dc	Normal	0	0	0	0	0	0	0	0
	-0.5V dc	-0.5V dc	-0.5V dc	Under	-1560	-1560	-500	-500	-819	-819	-500	-500
	Under -5.0V dc	-1.0V dc	-0.5V dc	Under	-3121	-1560	-1000	-500	-1638	-819	-1000	-500
4 mA to 20 mA	Over 21.0 mA	+22.0 mA	+21.0 mA	Over	N/A	N/A	22000	21000	18431	17407	11250	10625
	21.0 mA	+21.0 mA	+21.0 mA	Over	32767	32767	21000	21000	17407	17407	10625	10625
	4.0 mA to 20.0 mA	+20.0 mA	+20.0 mA	Normal	31207	31207	20000	20000	16383	16383	10000	10000
		+4.0 mA	+4.0 mA	Normal	6241	6241	4000	4000	0	0	0	0
	3.2 mA	+3.2 mA	+3.2 mA	Under	4993	4993	3200	3200	-819	-819	-500	-500
	Under 3.2 mA	0.0 mA	+3.2 mA	Under	0	4993	0	3200	-4096	-819	-2500	-500
1.0V to 5V dc	Over 5.25V dc	+5.5V dc	+5.25V dc	Over	N/A	N/A	5500	5250	18431	17407	11250	10625
	+5.25V dc	+5.25V dc	+5.25V dc	Over	32767	32767	5250	5250	17407	17407	10625	10625
	1.0V to 5.0V dc	+5.0V dc	+5.0V dc	Normal	31207	31207	5000	5000	16383	16383	10000	10000
		+1.0V dc	+1.0V dc	Normal	6241	6241	1000	1000	0	0	0	0
	0.5V dc	+0.5V dc	+0.5V dc	Under	3121	3121	500	500	-2048	-2048	-1250	-1250
	Under 0.5V dc	0.0V dc	0.0V dc	Under	0	3121	0	500	-4096	-2048	-2500	-1250

Table 4.5 1769-OF2 Valid Output Data Table

OF2 Output Range	Input Value	Example Data		Output Range State	Raw/Proportional Data		Engineering Unit		Scaled-for-PID		Percent Full Range	
					Decimal Range		Decimal Range		Decimal Range		Decimal Range	
		Controller Ordered	OF2 Output		Controller Ordered	OF2 Output and Echo	Controller Ordered	OF2 Output and Echo	Controller Ordered	OF2 Output and Echo	Controller Ordered	OF2 Output and Echo
0 mA to 20 mA	Over 21.0 mA	+22.0 mA	+21.0 mA	Over	N/A	N/A	22000	21000	18201	17202	11000	10500
	21.0 mA	21.0 mA	+21.0 mA	Over	32767	32767	21000	21000	17202	17202	10500	10500
	0.0 mA to 20.0 mA	20.0 mA	+20.0 mA	Normal	31207	31207	20000	20000	16383	16383	10000	10000
		0.0 mA	0.0 mA	Normal	0	0	0	0	0	0	0	0
	Under 0.0 mA	-1.0 mA	0.0 mA	Under	-1560	0	0	-1000	-819	0	-500	0

1769-OF2 Module Resolution

The resolution of an analog output channel depends on the output type/range and data format selected. Table 4.6 provides detailed resolution information for the 1769-OF2.

Table 4.6 1769-OF2 Output Resolution

1769-OF 2 Output Range	Raw/Proportional Data Over the Full Input Range		Engineering Units Over the Full Input Range		Scaled-For-PID Over the Full Input Range		Percent Over the Full Input Range	
	Bits and Engineering Units Resolution	Decimal Range and Count Value	Resolution	Decimal Range and Count Value	Resolution	Decimal Range and Count Value	Resolution	Decimal Range and Count Value
-10 to +10V dc	Sign +14 0.64 mV/ 2 counts	±32767 Count by 2	2.00 mV/ 2 counts	±10500 Count by 2	2.44 mV/ 2 counts	-410 to +16793 Count by 2	Not Applicable	Not Applicable
0 to +5V dc	Sign +13 0.64 mV/ 4 counts	-3121 to +32767 Count by 4	2.00 mV/ 2 counts	-500 to +5250 Count by 2	0.92 mV/ 3 counts	-1638 to +17202 Count by 3	1.00 mV/ 2 counts	-1000 to +10500 Count by 2
0 to +10V dc	Sign +14 0.64 mV/ 2 counts	-1560 to +32767 Count by 2	2.00 mV/ 2 counts	-500 to +10500 Count by 2	1.22 mV/ 2 counts	-819 to +17202 Count by 2	2.00 mV/ 2 counts	-500 to +10500 Count by 2
+4 to +20 mA	Sign +14 1.28 µA/ 2 counts	+4993 to +32767 Count by 2	2.00 µA/ 2 counts	+3200 to +2100 Count by 2	1.95 µA/ 2 counts	-819 to +17407 Count by 2	3.20 µA/ 2 counts	-500 to +10625 Count by 2
+1 to +5V dc	Sign +13 0.64 mV/ 4 counts	+3121 to +32767 Count by 4	2.00 mV/ 2 counts	+500 to +5250 Count by 2	0.73 mV/ 3counts	-2048 to +17407 Count by 3	0.80 mV/ 2 counts	-1250 to +10625 Count by 2
0 to +20 mA	Sign +14 1.28 µA/ 2 counts	0 to +32767 Count by 2	2.00 µA/ 2 counts	0 to +21000 Count by 2	2.44 µA/ 2 counts	0 to +17202 Count by 2	4.00 µA/ 2 counts	0 to +10500 Count by 2

1769-OF8C Output Module Memory Map

The 1769-OF8C memory map shows the output, input, and configuration tables for the 1769-OF8C.

Figure 4.2 1769-OF8C Memory Map

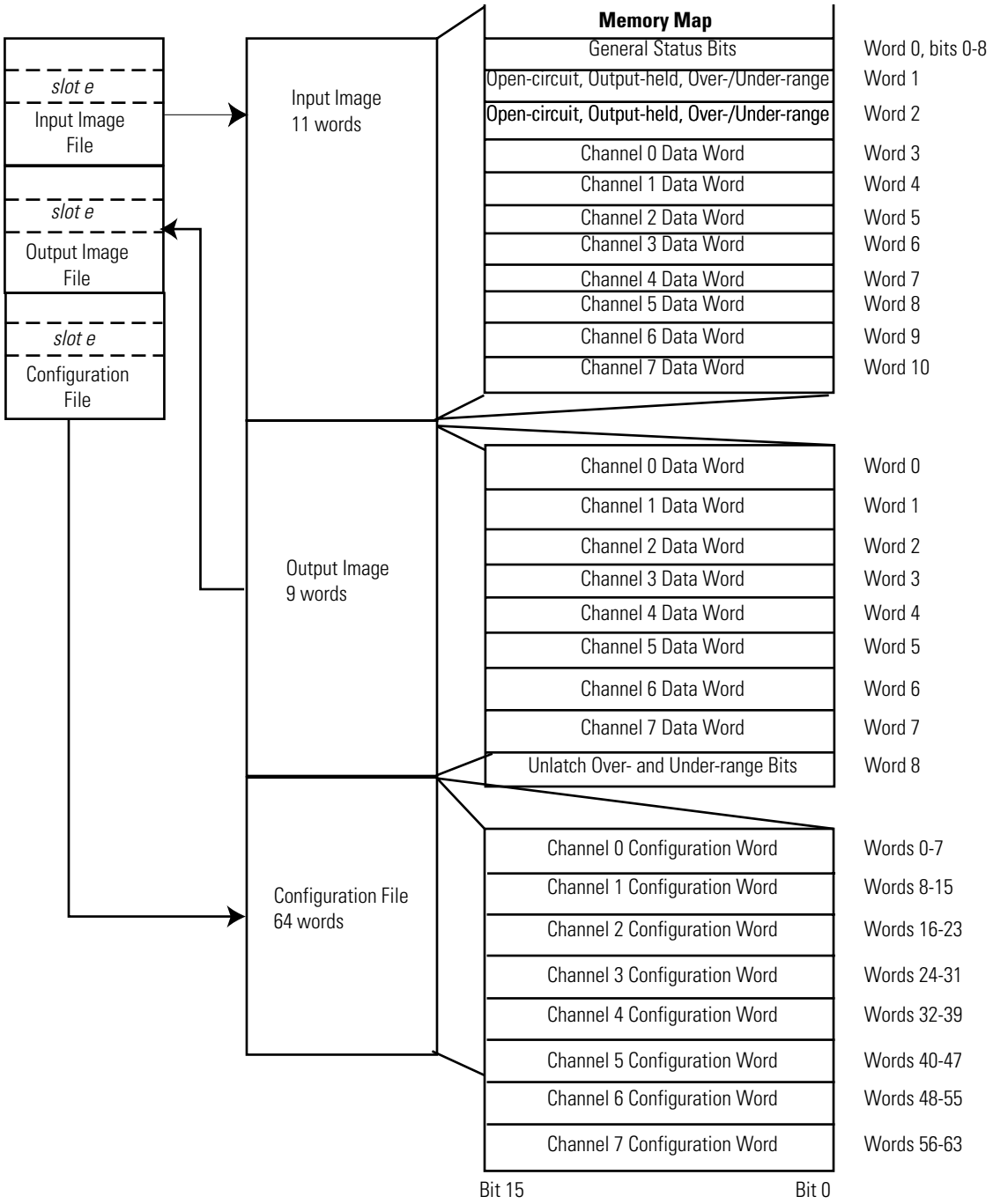

1769-OF8V Output Module Memory Map

The 1769-OF8V memory map shows the output, input, and configuration tables for the 1769-OF8V.

Figure 4.3 1769-OF8V Memory Map

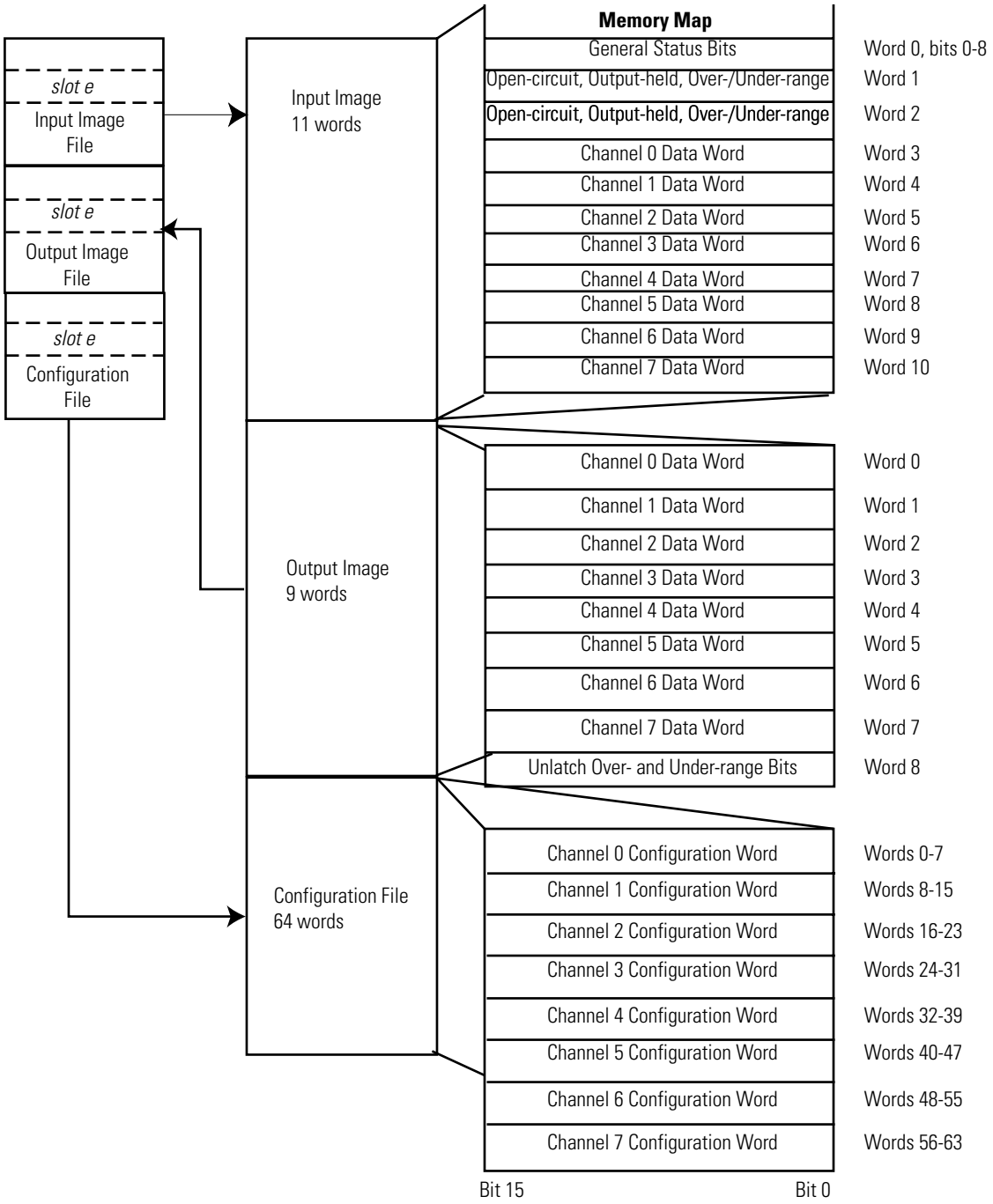

1769-OF8C and -OF8V Output Data File

The structure of the output data file is shown in the table below. Words 0 through 7 contain the commanded analog output data for channels 0 through 7, respectively. The most significant bit is the sign bit. Word 8 contains the control bits for unlatching alarms.

Table 4.7 1769-OF8C and -OF8V Output Data Table

Word	Bit Position															
	15	14	13	12	11	10	9	8	7	6	5	4	3	2	1	0
0	SGN	Analog Output Data Channel 0														
1	SGN	Analog Output Data Channel 1														
2	SGN	Analog Output Data Channel 2														
3	SGN	Analog Output Data Channel 3														
4	SGN	Analog Output Data Channel 4														
5	SGN	Analog Output Data Channel 5														
6	SGN	Analog Output Data Channel 6														
7	SGN	Analog Output Data Channel 7														
8	UU7	UO7	UU6	UO6	UU5	UO5	UU4	UO4	UU3	UO3	UU2	UO2	UU1	UO1	UU0	UO0

Channel Alarm Unlatch

These bits are written during run mode to clear any latched low- and high-clamps and under- and over-range alarms. The alarm is unlatched when the unlatch bit is set (1) and the alarm condition no longer exists. If the alarm condition persists, then the unlatch bit has no effect. You need to keep the unlatch bit set until verification from the appropriate input channel status word says that the alarm status bit has cleared (0). Then you need to reset (0) the unlatch bit. The module will not latch an alarm condition when a transition from a no alarm condition to an alarm condition occurs while a channel's clear latch bit is set.

Table 4.8 Channel Alarm Unlatch

Word	Bit Position															
	15	14	13	12	11	10	9	8	7	6	5	4	3	2	1	0
0	UU7[1]	UO7[2]	UU6	UO6	UU5	UO5	UU4	UO4	UU3	UO3	UU2	UO2	UU1	UO1	UU0	UO0

(1) Unlatch channel x under-range or low-clamp exceeded alarm.

(2) Unlatch channel x over-range or high-clamp exceeded alarm.

1769-OF8C and -OF8V Input Data File

This data table file provides immediate access to channel diagnostic information and analog output data at the module for use in the control program. To receive valid data, you must enable the channel. The data table structure is described below.

Table 4.9 1769-OF8C and -OF8V Input Data Table

Word	Bit Position															
	15	14	13	12	11	10	9	8	7	6	5	4	3	2	1	0
0								PF	S7	S6	S5	S4	S3	S2	S1	S0
1	D3	H3	U3	O3	D2	H2	U2	O2	D1	H1	U1	O1	D0	H0	U0	O0
2	D7	H7	U7	O7	D6	H6	U6	O6	D5	H5	U5	O5	D4	H4	U4	O4
3	Channel 0 Data Value															
4	Channel 1 Data Value															
5	Channel 2 Data Value															
6	Channel 3 Data Value															
7	Channel 4 Data Value															
8	Channel 5 Data Value															
9	Channel 6 Data Value															
10	Channel 7 Data Value															

1769-OF8C and -OF8V Data Values

Words 3 through 10 contain the data echo of the analog data presently commanded by the module for each output.

1769-OF8C and -OF8V Power Fail Bit (PF)

Word 0, bit 8, contains the analog power fail information for the output channels (which is isolated from the system backplane power). If set (1), this bit indicates that the analog power on the isolated output channel has failed. If external user power is selected for the module, the external power supply may be wired incorrectly or not supplying power. If internal (backplane) power is desired, be sure the selector switch on the module is in the internal power position.

1769-OF8C and -OF8V General Status Bits (S0 through S7)

Word 0, bits 0 through 7 contain the general status information for output channels 0 through 7. If set (1), these bits indicate an error associated with that channel. The over-range and under-range bits and the diagnostic bit are logically ORed to this position.

1769-OF8C and -OF8V Over-Range Flag Bits (O0 through O7)

Word 1, bits 0, 4, 8, and 12, and Word 2, bits 0, 4, 8, and 12 contain the over-range bits for channels 0 through 7. When set, the over-range bit indicates that the controller is attempting to drive the analog output above its normal operating range or above the channel's High Clamp level (if clamp limits are set for the channel). However, the module continues to convert analog output data to a maximum full range value if clamp levels are not set for the channel.

If alarm latching is not enabled for the channel, the bit is automatically reset (0) by the module when the over-range condition is cleared or the commanded value no longer exceeds the high clamp (the output is commanded to return to within the normal allowed range). The over-range bits apply to all output ranges. Refer to Table 4.17 1769-OF8C Valid Output Data Table on page 4-33 and Table 4.18 1769-OF8V Valid Output Data Table on page 4-34 to view the normal operating and over-range areas.

1769-OF8C and -OF8V Under-Range Flag Bits (U0 through U7)

Word 1, bits 1, 5, 9, and 13, and Word 2, bits 1, 5, 9, and 13 contain the under-range bits for channels 0 through 7. When set (1), the under-range bit indicates that the controller is attempting to drive the analog output below its normal operating range or below the channel's Low Clamp level (if clamp limits are set for the channel). However, the module continues to convert analog output data to a minimum full range value if clamp levels are not set for the channel.

If alarm latching is not enabled for the channel, the bit is automatically reset (0) by the module when the under-range condition is cleared or the commanded value no longer exceeds the low clamp (the output is commanded to return to within the normal allowed range). The under-range bits apply to all output ranges. Refer to Table 4.17 1769-OF8C Valid Output Data Table on page 4-33 and Table 4.18 1769-OF8V Valid Output Data Table on page 4-34 to view the normal operating and under-range areas.

1769-OF8C and -OF8V Diagnostic Bits (D0 through D7)

Word 1, bits 3, 7, 11, and 15, and Word 2, bits 3, 7, 11, and 15 contain the open-circuit diagnostic bits for input channels 0 through 7. When set (1), these bits indicate a broken output wire or high load resistance. These bits are always cleared (0) for the 1769-OF8V module since open-circuit diagnostics do not apply for analog voltage outputs.

1769-OF8C and -OF8V Output Held Bits (H0 through H7)

Word 1, bits 2, 6, 10, and 14, and Word 2, bits 2, 6, 10, and 14 contain the output held bits for input channels 0 through 7. When one of these bits is set (1), the corresponding channel is in the hold state. Output data will not change until value commanded by the controller matches the value being held by the module for any held output channel.

When the value commanded for a channel by the controller matches the value being held by the module, the Output Held bit for that channel is cleared (0). The output channel can again be directly controlled by the values commanded in the Output Data file by the controller. The control can determine the output value being held by the module for any channel whose Output Held bit is set (1) by reading words 3 to 10 of the Input Data file.

1769-OF8C and -OF8V Output Data Loopback/Echo

Words 3 through 10 provide output loopback/data echo through the input array for channels 0 through 7. The value of the data echo is the analog value currently being converted on-board the module by the D/A converter. This ensures that the logic-directed state of the output is true. Otherwise, the state of the output could vary depending on controller mode.

Under normal operating conditions, the data echo value is the same value that is being sent from the controller to the output module. Under abnormal conditions, the values may differ. For example:

1. During run mode, the control program could direct the module to a value over or under the defined full range. In that case, the module raises the over- or under-range flag and continues to convert and data echo up to the defined full range. However, upon reaching either the maximum upper or lower full range value, the module stops converting and echoes back that maximum upper or lower full range value, not the value being sent from the controller.

2. During program or fault mode with Hold Last State or User-Defined Value selected, the module echoes the hold last value or alternate value you selected. For more information on the hold last and user-defined values, see 1769-OF8C and -OF8V Fault Value on page 4-31 and 1769-OF8C and -OF8V Program/Idle Value on page 4-32.

3. When one or more of the output channel's Output Held bits are set (1). See 1769-OF8C and -OF8V Output Held Bits (H0 through H7) on page 4-21.

1769-OF8C and -OF8V Configuration Data File

The configuration file lets you determine how each individual output channel will operate. Parameters such as the output type/range and data format are set up using this file. The configuration data file is writable and readable. The default value for the configuration data file is all zeros. The structure of the channel configuration file is explained below. The channel configuration words, the first two words of each eight word group, are described in Table 4.10 1769-OF8C and -OF8V Configuration Data File on page 4-22.

Table 4.10 1769-OF8C and -OF8V Configuration Data File

Word	Description	Word	Description
0	Channel 0 Configuration Word 0	24	Channel 3 Configuration Word 0
1	Channel 0 Configuration Word 1	25	Channel 3 Configuration Word 1
2	Channel 0 Fault Value Word	26	Channel 3 Fault Value Word
3	Channel 0 Program Idle Mode Word	27	Channel 3 Program Idle Mode Word
4	Channel 0 Low Clamp	28	Channel 3 Low Clamp
5	Channel 0 High Clamp	29	Channel 3 High Clamp
6	Channel 0 Ramp Rate	30	Channel 3 Ramp Rate
7	Channel 0 Spare	31	Channel 3 Spare
8	Channel 1 Configuration Word 0	32	Channel 4 Configuration Word 0
9	Channel 1 Configuration Word 1	33	Channel 4 Configuration Word 1
10	Channel 1 Fault Value Word	34	Channel 4 Fault Value Word
11	Channel 1 Program Idle Mode Word	35	Channel 4 Program Idle Mode Word
12	Channel 1 Low Clamp	36	Channel 4 Low Clamp
13	Channel 1 High Clamp	37	Channel 4 High Clamp
14	Channel 1 Ramp Rate	38	Channel 4 Ramp Rate
15	Channel 1 Spare	39	Channel 4 Spare
16	Channel 2 Configuration Word 0	40	Channel 5 Configuration Word 0
17	Channel 2 Configuration Word 1	41	Channel 5 Configuration Word 1
18	Channel 2 Fault Value Word	42	Channel 5 Fault Value Word
19	Channel 2 Program Idle Mode Word	43	Channel 5 Program Idle Mode Word
20	Channel 2 Low Clamp	44	Channel 5 Low Clamp
21	Channel 2 High Clamp	45	Channel 5 High Clamp
22	Channel 2 Ramp Rate	46	Channel 5 Ramp Rate
23	Channel 2 Spare	47	Channel 5 Spare

Word	Description	Word	Description
48	Channel 6 Configuration Word 0	56	Channel 7 Configuration Word 0
49	Channel 6 Configuration Word 1	57	Channel 7 Configuration Word 1
50	Channel 6 Fault Value Word	58	Channel 7 Fault Value Word
51	Channel 6 Program Idle Mode Word	59	Channel 7 Program Idle Mode Word
52	Channel 6 Low Clamp	60	Channel 7 Low Clamp
53	Channel 6 High Clamp	61	Channel 7 High Clamp
54	Channel 6 Ramp Rate	62	Channel 7 Ramp Rate
55	Channel 6 Spare	63	Channel 7 Spare

Table 4.11 1769-OF8C and -OF8V Word 0 and 1 Bit Descriptions

Word/ Bit	15	14	13	12	11	10	9	8	7	6	5	4	3	2	1	0
Word 0	E	Reserved							SIU	SIO	LA	ER	FM	PM	HI	PFE
Word 1	Reserved					Output Data Format Select			Reserved					Output Type/Range		

The configuration file is typically modified using the programming software configuration screen. For information on configuring the module using MicroLogix 1500 and RSLogix 500, see Appendix B; for CompactLogix and RSLogix 5000, see Appendix C; for 1769-ADN DeviceNet Adapter and RSNetWorx, see Appendix D.

The configuration file can also be modified through the control program, if supported by the controller. The structure and bit settings are shown in 1769-OF8C and -OF8V Channel Configuration on page 4-24.

1769-OF8C and -OF8V Channel Configuration

The first two words of each eight word group in the configuration file allow you to change the parameters of each channel independently. For example, words 8 and 9 correspond to channel 1 while words 56 and 57 correspond to channel 7.

Table 4.12 1769-OF8C Channel Configuration[1]

Define	Indicate this	These bit settings															
		15	14	13	12	11	10	9	8	7	6	5	4	3	2	1	0
Program (Idle) to Fault Enable	Program (Idle) Mode Data Applied[2]																0
	Fault Mode Data Applied[2]																1
Hold for Initialization	Disabled															0	
	Enabled															1	
Program (Idle) Mode	Hold Last State[2]														0		
	User-Defined Value[2]														1		
Fault Mode	Hold Last State[2]													0			
	User-Defined Fault Value[2]													1			
Enable Ramping	Disabled												0				
	Enabled												1				
Enable Clamp/ Alarm Latching	Disabled											0					
	Enabled											1					
Enable High Clamp/ Alarm Interrupt	Disabled										0						
	Enabled										1						
Enable Low Clamp/ Alarm Interrupt	Disabled									0							
	Enabled									1							
Enable Channel	Disabled	0															
	Enabled	1															

(1) Refer to the 1769-OF8C and -OF8V Output Channel Configuration table.

(2) These functions are not supported by all controllers (e.g. MicroLogix 1500) using any configuration method. Refer to your controller manual for details.

Table 4.13 1769-OF8C and -OF8V Output Channel Configuration

	Define	Indicate this	These bit settings															
			15	14	13	12	11	10	9	8	7	6	5	4	3	2	1	0
1769-OF8C	Output Range Select	0 to 20 mA dc														0	0	0
		4 to 20 mA dc														0	0	1
	Output Data Select	Raw/Proportional Counts						0	0	0								
		Engineering Units						0	0	1								
		Scaled for PID						0	1	0								
		Percent Range						0	1	1								
1769-OF8V	Output Range Select	-10…+10V dc														0	0	0
		0…5V dc														0	0	1
		0…10V dc														0	1	0
		1…5V dc														0	1	1
	Output Data Select	Raw/Proportional Counts						0	0	0								
		Engineering Units						0	0	1								
		Scaled for PID						0	1	0								
		Percent Range						0	1	1								

1769-OF8C and -OF8V Enable/Disable Channel

This configuration selection (bit 15) allows each channel to be individually enabled.

TIP A channel that is not enabled has zero voltage or current at its terminal.

Clamping/Limiting

Clamping limits the output from the analog module to remain within a range configured by the controller, even when the controller commands an output outside that range. This safety feature sets a high clamp and a low clamp.

Once clamps are determined for a module, any data received from the controller that exceeds those clamps sets an appropriate limit alarm and transitions the output to that limit but not beyond the requested value.

For example, an application may set the high clamp on a 1769-OF8C module for 15 mA and the low clamp for 5 mA. If a controller sends a value corresponding to 16 mA to the module, the module will only apply 15 mA to its screw terminals.

Clamping is disabled on a per channel basis by entering a 0 value for both the high and low clamps in the Configuration Data file. Interrupts are generated on a high- or low-alarm by setting (1) the SIO bit (for high-clamp or over-range alarm) or setting (1) the SIU bit (for low-clamp or under-range alarm). Alarms caused by exceeding over-/under-range or clamp limits can be latched by setting (1) a channel's LA bit on a per channel basis.

Clamp/Limit Alarms

This function works directly with clamping. When a module receives a data value from the controller that exceeds clamping limits, it applies signal values at the clamping limit but also sends a status bit to the controller notifying it that the value sent exceeds the clamping limits.

With reference to the example in the Clamping/Limiting section, if a 1769-OF8C module has clamping limits of 15 mA and 5 mA but then receives data to apply 16 mA, only 15 mA is applied to the screw terminals. The module sends a status bit back to the controller informing it that the 16 mA value exceeds the module's clamping limits.

Ramping

Ramping limits the speed at which an analog output signal can change. This prevents fast transitions in the output from damaging the devices that an output module controls.

Table 4.14 Ramping Types

Ramping Type	Description
Ramp to Fault Mode	This type of ramping occurs when the present output value changes to the Fault Value after a communications fault occurs. This is the only type of ramping for the 1769-OF8C and -OF8V modules.

The ramp rate is defined in terms of the selected range/format in units per second. For example, in the 0 to 20 mA range and percent of full scale format, a ramp rate of 1000 is 10%/second (since 1000 is 10% of the total number of counts in the full scale of the 0 to 20 mA range) or a maximum of 2 mA per second. Table 4.15 and Table 4.16 describes how ramp rate is defined for all output range/types and output data formats.

Table 4.15 1769-OF8C Output Range/Types and Output Data Formats

Output Data Format Output Range/Type	Total Counts in Full Scale	Number of Counts for Every 1% of Ramp Rate	Real Units/Second for Every 1% of Ramp Rate
Proportional Counts			
0…20 mA	65534	655	0.2 mA/s
4…20 mA			0.16 mA/s
Engineering Units			
0…20 mA	21000	210	0.2 mA/s
4…20 mA	17800	178	0.16 mA/s
Scaled for PID			
0…20 mA	16383	164	0.2 mA/s
4…20 mA			0.16 mA/s
Percent of Full Scale			
0…20 mA	10000	100	0.2 mA/s
4…20 mA			0.16 mA/s

Table 4.16 1769-OF8V Output Range/Types and Output Data Formats

Output Data Format Output Range/Type	Total Counts in Full Scale	Number of Counts for Every 1% of Ramp Rate	Real Units/Second for Every 1% of Ramp Rate
Proportional Counts			
-10…+10V	65534	655	0.2V/s
0…5V			0.05V/s
0…10V			0.1V/s
1…5V			0.04V/s
Engineering Units			
-10…+10V	21000	210	0.2V/s
0…5V	5750	58	0.05V/s
0…10V	11000	110	0.1V/s
1…5V	4750	48	0.04V/s
Scaled for PID			
-10…+10V	16383	164	0.2V/s
0…5V			0.05V/s
0…10V			0.1V/s
1…5V			0.04V/s

Table 4.16 1769-OF8V Output Range/Types and Output Data Formats

Output Data Format Output Range/Type	Total Counts in Full Scale	Number of Counts for Every 1% of Ramp Rate	Real Units/Second for Every 1% of Ramp Rate
Percent of Full Scale			
-10…+10V	10000	100	0.2V/s
0…5V			0.05V/s
0…10V			0.1V/s
1…5V			0.04V/s

Ramping only takes place, if configured, when the output is being commanded to go to a fault state. Ramping is not done in normal run operation. The ramp rate values are entered in the Configuration Data file and are accepted as valid only if:

- The number of counts entered for a channel's ramp rate is greater than or equal to a minimum of 1% of the total number of full scale counts for the channel's selected data format (see Table 4.14 and Table 4.15 for minimum values).

  OR

- The number of counts entered for a channel's ramp rate may be equal to 0 if ramping is not enabled for the channel.

Hold for Initialization

Hold for Initialization causes outputs to hold present state until the value commanded by the controller matches the value held by the module providing a bumpless transfer.

If Hold for Initialization is selected, outputs hold if any of these three conditions occur:

- initial connection is established after power-up
- new connection is established after a communications fault occurs
- transition to Run Mode from Program state

The Output Held bit (see the Input Data file) for a channel indicates that the channel is holding.

Open Wire Detection (1769-OF8C Only)

This feature detects when current flow is not present on an output channel that is enabled and has a non-zero output value commanded.

When an open wire condition occurs channel, the diagnostic bit (D bit in Input Data file status words) is set for that channel.

1769-OF8C and -OF8V Fault Mode (FM)

This configuration selection provides individual fault mode selection for the analog channels. When this selection is disabled [the bit is reset (0)], the module *holds* the *last state*, meaning that the analog output remains at the last converted value prior to the condition that caused the control system to enter the program mode.

IMPORTANT Hold last state is the default condition for the 1769-OF8C and -OF8V during a control system run-to-program mode change.

TIP MicroLogix 1500™ does not support the analog output module's default hold last state function and resets analog outputs to zero when the system enters the program mode.

If this selection is enabled [the bit is set (1)] and the system enters the program mode, it commands the module to convert the *user-specified* value from the channel's Fault mode word to the appropriate analog output for the range selected.

TIP Not all controllers support this function. Refer to your controller's user manual for details.

1769-OF8C and -OF8V Program/Idle Mode (PM)

This configuration selection provides individual program/idle mode selection for the analog channels 0. When this selection is disabled [the bit is reset (0)], the module *holds* the *last state*, meaning that the analog output remains at the last converted value prior to the condition that caused the control system to enter the program mode.

IMPORTANT Hold last state is the default condition for the 1769-OF8C and -OF8V during a control system run-to-program mode change.

TIP MicroLogix 1500™ does not support the analog output module's default hold last state function and resets analog outputs to zero when the system enters the program mode.

If this selection is enabled [the bit is set (1)] and the system enters the program mode, it commands the module to convert the *user-specified* value from the channel's Program/Idle mode word to the appropriate analog output for the range selected.

TIP Not all controllers support this function. Refer to your controller's user manual for details.

1769-OF8C and -OF8V Program/Idle to Fault Enable (PFE)

If a system currently in program/idle mode faults, this setting determines whether the program/idle or fault value is applied to the output. If the selection is enabled [the bit is set (1)], the module applies the fault value. If the selection is disabled [the bit is reset (0)], the module applies the program/idle mode data value. The default setting is disabled.

TIP Not all controllers support this function. Refer to your controller's user manual for details.

1769-OF8C and -OF8V Fault Value

Using words each channel's Fault Value word, you can specify the values the outputs will assume when the system enters the fault mode. The default value is 0. Valid values are dependent upon the range selected in the range selection field. If the value you entered is outside the normal operating range for the output range selected, the module generates a configuration error.

For example, if you select engineering units for the 0 to 20 mA range and enter a fault value within the normal operating range (0 to 20000), the module will configure and operate correctly. However, if you enter a value outside the normal operating range (for example 21000), the module indicates a configuration error.

TIP Not all controllers support this function. Refer to your controller's user manual for details.

EXAMPLE

- If the default value, 0000, is used and the range selected is 0 to 20 mA, the module will output 0 mA for all data formats.
- If the raw/proportional or engineering units format is selected and zero is entered as Program/Idle mode word in the 4 to 20 mA range (for 1769-OF8C) or the 1 to 5V range (for 1769-OF8V), a configuration error results.
- See Table 4.17 1769-OF8C Valid Output Data Table on page 4-33 and Table 4.18 1769-OF8V Valid Output Data Table on page 4-34for more examples.

1769-OF8C and -OF8V Program/Idle Value

Use each channel's Program/Idle Mode word to set the integer values for the outputs to assume when the system enters the program mode. The values are dependent upon the range selected in the range selection field. If the value you entered is outside the normal operating range for the output range selected, the module generates a configuration error. The default value is 0.

For example, if you select engineering units for the 0 to 20 mA range and enter a program/idle value within the normal operating range (0 to 20000), the module will configure and operate correctly. However, if you enter a value outside the normal operating range (for example 21000), the module indicates a configuration error.

TIP Not all controllers support this function. Refer to your controller's user manual for details.

EXAMPLE

- If the default value, 0000, is used and the range selected is 0 to 20 mA, the module will output 0 mA for all data formats.
- If the raw/proportional or engineering units format is selected and zero is entered as Program/Idle mode word in the 4 to 20 mA range (for 1769-OF8C) or the 1 to 5V range (for 1769-OF8V), a configuration error results.
- See Table 4.17 1769-OF8C Valid Output Data Table on page 4-33 and Table 4.18 1769-OF8V Valid Output Data Table on page 4-34 for more examples.

1769-OF8C Valid Output Data Word Formats/Ranges

The following table shows the valid formats and data ranges accepted by the module.

Table 4.17 1769-OF8C Valid Output Data Table

OF8C Normal Operating Range	Input Value	Example Data		Output Range State	Raw/Proportional Data		Engineering Unit		Scaled-for-PID		Percent Full Range	
					Decimal Range		Decimal Range		Decimal Range		Decimal Range	
		Controller Ordered	OF8C Output		Controller Ordered	OF8C Output and Echo	Controller Ordered	OF8C Output and Echo	Controller Ordered	OF8C Output and Echo	Controller Ordered	OF8C Output and Echo
4 mA to 20 mA	Over 21.0 mA	+22.0 mA	+21.0 mA	Over	N/A	N/A	22000	21000	18431	17407	11250	10625
	21.0 mA	+21.0 mA	+21.0 mA	Over	32767	32767	21000	21000	17407	17407	10625	10625
	4.0 mA to 20.0 mA	+20.0 mA	+20.0 mA	Normal	29085	29085	20000	20000	16383	16383	10000	10000
		+4.0 mA	+4.0 mA	Normal	-29822	-29822	4000	4000	0	0	0	0
	3.2 mA	+3.2 mA	+3.2 mA	Under	-32767	-32767	3200	3200	-819	-819	-500	-500
	Under 3.2 mA	0.0 mA	+3.2 mA	Under	N/A	N/A	0	3200	-4096	-819	-2500	-500
0 mA to 20 mA	Over 21.0 mA	+22.0 mA	+21.0 mA	Over	N/A	N/A	22000	21000	18201	17202	11000	10500
	21.0 mA	21.0 mA	+21.0 mA	Over	32767	32767	21000	21000	17202	17202	10500	10500
	0.0 mA to 20.0 mA	20.0 mA	+20.0 mA	Normal	29646	29646	20000	20000	16383	16383	10000	10000
		0.0 mA	0.0 mA	Normal	-32767	-32767	0	0	0	0	0	0
	Under 0.0 mA	-1.0 mA	0.0 mA	Under	N/A	N/A	-1000	0	-819	0	-500	0

1769-OF8V Valid Output Data Word Formats/Ranges

The following table shows the valid formats and data ranges accepted by the module.

Table 4.18 1769-OF8V Valid Output Data Table

OF8V Normal Operating Output Range	Input Value	Example Data		Output Range State	Raw/Proportional Data		Engineering Unit		Scaled-for-PID		Percent Full Range	
					Decimal Range		Decimal Range		Decimal Range		Decimal Range	
		Controller Ordered	OF8C Output		Controller Ordered	OF8C Output and Echo	Controller Ordered	OF8C Output and Echo	Controller Ordered	OF8C Output and Echo	Controller Ordered	OF8C Output and Echo
±10V dc	Over 10.5V dc	+11.0V dc	+10.5V dc	Over	N/A	N/A	11000	10500	17202	16793	11000	10500
	+10.5V dc	+10.5V dc	+10.5V dc	Over	32767	32767	10500	10500	16793	16793	10500	10500
	-10V to +10V dc	+10.0V dc	+10.0V dc	Normal	31207	31207	10000	10000	16383	16383	10000	10000
		0.0V dc	0.0V dc	Normal	0	0	0	0	8192	8192	0	0
		-10.0V dc	-10.0V dc	Normal	-31207	-31207	-10000	-10000	0	0	-10000	-10000
	-10.5V dc	-10.5V dc	-10.5V dc	Under	-32767	-32767	-10500	-10500	-410	-410	-10500	-10500
	Under -0.5V dc	-11.0V dc	-11.0V dc	Under	N/A	N/A	-11000	-10500	-819	-410	-11000	-10500
0V to 5V dc	Over 5.25V dc	5.5V dc	+5.25V dc	Over	N/A	N/A	5500	5250	18021	17202	11000	10500
	5.25V dc	5.25V dc	+5.25V dc	Over	32767	32767	5250	5250	17202	17202	10500	10500
	0.0V dc to 5.0V dc	5.0V dc	+5.0V dc	Normal	29918	29918	5000	5000	16383	16383	10000	10000
		0.0V dc	0.0V dc	Normal	-27068	-27068	0	0	0	0	0	0
	-0.5V dc	-0.5V dc	-0.5V dc	Under	-32767	-32767	-500	-500	-1638	-1638	-1000	-1000
	Under -0.5V dc	-1.0V dc	-0.5V dc	Under	N/A	N/A	-1000	-500	-3277	-1638	-2000	-1000

Table 4.18 1769-OF8V Valid Output Data Table

OF8V Normal Operating Output Range	Input Value	Example Data		Output Range State	Raw/Proportional Data		Engineering Unit		Scaled-for-PID		Percent Full Range	
					Decimal Range		Decimal Range		Decimal Range		Decimal Range	
		Controller Ordered	OF8C Output		Controller Ordered	OF8C Output and Echo	Controller Ordered	OF8C Output and Echo	Controller Ordered	OF8C Output and Echo	Controller Ordered	OF8C Output and Echo
0V to 10V dc	Over 10.5V dc	11.0V dc	+10.5V dc	Over	N/A	N/A	11000	10500	18021	17202	11000	10500
	+10.5V dc	+10.5V dc	+10.5V dc	Over	32767	32767	10500	10500	17202	17202	10500	10500
	0.0V dc to 10.0V dc	+10.0V dc	+10.0V dc	Normal	29788	29788	10000	10000	16383	16383	10000	10000
		0.0V dc	0.0V dc	Normal	-29788	-29788	0	0	0	0	0	0
	-0.5V dc	-0.5V dc	-0.5V dc	Under	-32767	-32767	-500	-500	-819	-819	-500	-500
	Under -5.0V dc	-1.0V dc	-0.5V dc	Under	N/A	N/A	-1000	-500	-1638	-819	-1000	-500
1.0V to 5V dc	Over 5.25V dc	+5.5V dc	+5.25V dc	Over	N/A	N/A	5500	5250	18431	17407	11250	10625
	+5.25V dc	+5.25V dc	+5.25V dc	Over	32767	32767	5250	5250	17407	17407	10625	10625
	1.0V to 5.0V dc	+5.0V dc	+5.0V dc	Normal	29318	29318	5000	5000	16383	16383	10000	10000
		+1.0V dc	+1.0V dc	Normal	-25869	-25869	1000	1000	0	0	0	0
	0.5V dc	+0.5V dc	+0.5V dc	Under	-32767	-32767	500	500	-2048	-2048	-1250	-1250
	Under 0.5V dc	0.0V dc	0.0V dc	Under	N/A	N/A	0	500	-4096	-2048	-2500	-1250

Notes:

Module Diagnostics and Troubleshooting

This chapter describes troubleshooting the analog input and output modules. This chapter contains information on:

- safety considerations when troubleshooting
- module vs. channel operation
- the module's diagnostic features
- critical vs. non-critical errors
- module condition data

Safety Considerations

Safety considerations are an important element of proper troubleshooting procedures. Actively thinking about the safety of yourself and others, as well as the condition of your equipment, is of primary importance.

The following sections describe several safety concerns you should be aware of when troubleshooting your control system.

ATTENTION

Never reach into a machine to actuate a switch because unexpected motion can occur and cause injury.

Remove all electrical power at the main power disconnect switches before checking electrical connections or inputs/outputs causing machine motion.

Indicator Lights

When the green LED on the analog module is illuminated, it indicates that power is applied to the module.

Activating Devices When Troubleshooting

When troubleshooting, never reach into the machine to actuate a device. Unexpected machine motion could occur.

Stand Clear of the Machine

When troubleshooting any system problem, have all personnel remain clear of the machine. The problem could be intermittent, and sudden unexpected machine motion could occur. Have someone ready to operate an emergency stop switch in case it becomes necessary to shut off power to the machine.

Program Alteration

There are several possible causes of alteration to the user program, including extreme environmental conditions, Electromagnetic Interference (EMI), improper grounding, improper wiring connections, and unauthorized tampering. If you suspect a program has been altered, check it against a previously saved program on an EEPROM or UVPROM memory module.

Safety Circuits

Circuits installed on the machine for safety reasons, like over-travel limit switches, stop push buttons, and interlocks, should always be hard-wired to the master control relay. These devices must be wired in series so that when any one device opens, the master control relay is de-energized, thereby removing power to the machine. Never alter these circuits to defeat their function. Serious injury or machine damage could result.

Module Operation vs. Channel Operation

The module performs operations at two levels:

- module level
- channel level

Module-level operations include functions such as power-up, configuration, and communication with a bus master, such as a MicroLogix 1500 controller.

Channel-level operations describe channel related functions, such as data conversion and over- or under-range detection.

Internal diagnostics are performed at both levels of operation. When detected, module error conditions are immediately indicated by the module status LED. Both module hardware and channel configuration error conditions are reported to the controller. Channel over-range or under-range conditions are reported in the module's input data table. Module hardware errors are typically reported in the controller's I/O status file. Refer to your controller manual for details.

Power-up Diagnostics

At module power-up, a series of internal diagnostic tests are performed. These diagnostic tests must be successfully completed or the module status LED remains off and a module error results and is reported to the controller.

Table 5.1 Diagnostics

If module status LED is:	Indicated condition:	Corrective action:
On	Proper Operation	No action required.
Off	Module Fault	Cycle power. If condition persists, replace the module. Call your local distributor or Rockwell Automation for assistance.
Blinking[1]	Isolated 24V Power Not Present	Check external power switch setting. Check wiring to external power supply terminals. Check external power supply.

(1) 1769-OF8V and -OF8C only.

Channel Diagnostics

When an input or output module channel is enabled, the module performs a diagnostic check to see that the channel has been properly configured. In addition, the module checks each channel on every scan for configuration errors, over-range and under-range, open-circuit (input module in 4 to 20 mA range only) and output wire broken/high load resistance (output module only) conditions.

Out-of-Range Detection (Input and Output Modules)

For input modules, whenever the data received at the channel word is out of the defined operating range, an over-range or under-range error is indicated in the Input Data file.

For output modules, whenever the controller is driving data over or under the defined operating range, an over-range or under-range error is indicated in the Input Data file.

Open-Circuit Detection (Input Modules Only)

The module performs an open-circuit test on all enabled channels configured for 4 to 20 mA inputs. Whenever an open-circuit condition occurs, the under-range bit for that channel is set in the Input Data file.

Possible causes of an open circuit include:

- the sensing device may be broken
- a wire may be loose or cut
- the sensing device may not be installed on the configured channel

Output Wire Broken/High Load Resistance (Output Modules Only)

A check is performed on all enabled channels to determine if an output wire is broken, or if the load resistance is high, in the case of current mode outputs. Whenever one of these conditions is present, the diagnostic bit for that channel is set in the Input Data file.

Non-critical vs. Critical Module Errors

Non-critical module errors are typically recoverable. Channel errors (over-range or under-range errors) are non-critical. Non-critical error conditions are indicated in the module input data table. Non-critical configuration errors are indicated by the extended error code. See Table 5.4 1769-IF4 and -OF2 Extended Error Codes on page 5-6.

Critical module errors are conditions that prevent normal or recoverable operation of the system. When these types of errors occur, the system typically leaves the run or program mode of operation until the error can be dealt with. Critical module errors are indicated in Table 5.4 1769-IF4 and -OF2 Extended Error Codes on page 5-6.

Module Error Definition Table

Analog module errors are expressed in two fields as four-digit Hex format with the most significant digit as “don’t care” and irrelevant. The two fields are “Module Error” and “Extended Error Information”. The structure of the module error data is shown below.

Table 5.2 Module Error Table

“Don’t Care” Bits				Module Error			Extended Error Information								
15	**14**	**13**	**12**	**11**	**10**	**9**	**8**	**7**	**6**	**5**	**4**	**3**	**2**	**1**	**0**
0	0	0	0	0	0	0	0	0	0	0	0	0	0	0	0
Hex Digit 4				**Hex Digit 3**			**Hex Digit 2**					**Hex Digit 1**			

Module Error Field

The purpose of the module error field is to classify module errors into three distinct groups, as described in the table below. The type of error determines what kind of information exists in the extended error information field. These types of module errors are typically reported in the controller's I/O status file. Refer to your controller manual for details.

Table 5.3 Module Error Types

Error Type	Module Error Field Value Bits 11 through 09 (Bin)	Description
No Errors	000	No error is present. The extended error field holds no additional information.
Hardware Errors	001	General and specific hardware error codes are specified in the extended error information field.
Configuration Errors	010	Module-specific error codes are indicated in the extended error field. These error codes correspond to options that you can change directly. For example, the input range or input filter selection.

Extended Error Information Field

Check the extended error information field when a non-zero value is present in the module error field. Depending upon the value in the module error field, the extended error information field can contain error codes that are module-specific or common to all 1769 analog modules.

TIP If no errors are present in the module error field, the extended error information field will be set to zero.

Hardware Errors

General or module-specific hardware errors are indicated by module error code 2. See Table 5.4 1769-IF4 and -OF2 Extended Error Codes on page 5-6, Table 5.5 1769-IF8 Extended Error Codes on page 5-7, and Table 5.6 1769-OF8C and -OF8V Extended Error Codes on page 5-10.

Configuration Errors

If you set the fields in the configuration file to invalid or unsupported values, the module ignores the invalid configuration, generates a non-critical error, and keeps operating with the previous configuration.

Each type of analog module has different features and different error codes. See Table 5.4 1769-IF4 and -OF2 Extended Error Codes on page 5-6, Table 5.5 1769-IF8 Extended Error Codes on page 5-7, and Table 5.6 1769-OF8C and -OF8V Extended Error Codes on page 5-10.

Error Codes

Error codes can help troubleshoot your module.

Table 5.4 1769-IF4 and -OF2 Extended Error Codes

Error Type	Hex Equivalent[1]	Module Error Code	Extended Error Information Code	Error Description
		Binary	Binary	
No Error	X000	000	0 0000 0000	No Error
General Common Hardware Error	X200	001	0 0000 0000	General hardware error; no additional information
	X201	001	0 0000 0001	Power-up reset state
Hardware-Specific Error	X300	001	0 1000 0000	General hardware error, loss of external 24V dc power
	X301	001	0 1000 0001	Microprocessor hardware error
1769-IF4 Specific Configuration Error	X400	010	0 0000 0000	General configuration error; no additional information
	X401	010	0 0000 0001	invalid input range selected (channel 0)
	X402	010	0 0000 0010	invalid input range selected (channel 1)
	X403	010	0 0000 0011	invalid input range selected (channel 2)
	X404	010	0 0000 0100	invalid input range selected (channel 3)
	X405	010	0 0000 0101	invalid input filter selected (channel 0)
	X406	010	0 0000 0110	invalid input filter selected (channel 1)
	X407	010	0 0000 0111	invalid input filter selected (channel 2)
	X408	010	0 0000 1000	invalid input filter selected (channel 3)
	X409	010	0 0000 1001	invalid input format selected (channel 0)
	X40A	010	0 0000 1010	invalid input format selected (channel 1)
	X40B	010	0 0000 1011	invalid input format selected (channel 2)
	X40C	010	0 0000 1100	invalid input format selected (channel 3)

Table 5.4 1769-IF4 and -OF2 Extended Error Codes

Error Type	Hex Equivalent[1]	Module Error Code	Extended Error Information Code	Error Description
		Binary	Binary	
1769-OF2 Specific Configuration Error	X400	010	0 0000 0000	General configuration error; no additional information
	X401	010	0 0000 0001	invalid output range selected (channel 0)
	X402	010	0 0000 0010	invalid output range selected (channel 1)
	X403	010	0 0000 0011	invalid output data format selected (channel 0)
	X404	010	0 0000 0100	invalid output data format selected (channel 1)
	X405	010	0 0000 0101	invalid fault value entered for data format selected (channel 0)
	X406	010	0 0000 0110	invalid fault value entered for data format selected (channel 1)
	X407	010	0 0000 0111	invalid program value entered for data format selected (channel 0)
	X408	010	0 0000 1000	invalid program value entered for data format selected (channel 1)

(1) X represents the “Don’t Care” digit.

Table 5.5 1769-IF8 Extended Error Codes

Error Type	Hex Equivalent[1]	Module Error Code	Extended Error Information Code	Error Description
		Binary	Binary	
No Error	X000	000	0 0000 0000	No Error
General Common Hardware Error	X200	001	0 0000 0000	General hardware error; no additional information
	X201	001	0 0000 0001	Power-up reset state
Hardware-Specific Error	X300	001	0 1000 0000	General hardware error, loss of external 24V dc power
	X301	001	0 1000 0001	Microprocessor hardware error
	X302	001	1 0000 0010	A/D converter communication error

Table 5.5 1769-IF8 Extended Error Codes

Error Type	Hex Equivalent[1]	Module Error Code	Extended Error Information Code	Error Description
		Binary	Binary	
1769-IF8 Specific Configuration Error	X400	010	0 0000 0000	General configuration error; no additional information
	X401	010	0 0000 0001	invalid input range selected (channel 0)
	X402	010	0 0000 0010	invalid input range selected (channel 1)
	X403	010	0 0000 0011	invalid input range selected (channel 2)
	X404	010	0 0000 0100	invalid input range selected (channel 3)
	X405	010	0 0000 0101	invalid input range selected (channel 4)
	X406	010	0 0000 0110	invalid input range selected (channel 5)
	X407	010	0 0000 0111	invalid input range selected (channel 6)
	X408	010	0 0000 1000	invalid input range selected (channel 7)
	X409	010	0 0000 1001	invalid input filter selected (channel 0)
	X40A	010	0 0000 1010	invalid input filter selected (channel 1)
	X40B	010	0 0000 1011	invalid input filter selected (channel 2)
	X40C	010	0 0000 1100	invalid input filter selected (channel 3)
	X40D	010	0 0000 1101	invalid input filter selected (channel 4)
	X40E	010	0 0000 1110	invalid input filter selected (channel 5)
	X40F	010	0 0000 1111	invalid input filter selected (channel 6)
	X410	010	0 0001 0000	invalid input filter selected (channel 7)
	X411	010	0 0001 0001	invalid input format selected (channel 0)
	X412	010	0 0001 0010	invalid input format selected (channel 1)
	X413	010	0 0001 0011	invalid input format selected (channel 2)
	X414	010	0 0001 0100	invalid input format selected (channel 3)
	X415	010	0 0001 0101	invalid input format selected (channel 4)
	X416	010	0 0001 0110	invalid input format selected (channel 5)
	X417	010	0 0001 0111	invalid input format selected (channel 6)
	X418	010	0 0001 1000	invalid input format selected (channel 7)
	X419	010	0 0001 1001	alarm not enabled (channel 0)
	X41A	010	0 0001 1010	alarm not enabled (channel 1)

Table 5.5 1769-IF8 Extended Error Codes

Error Type	Hex Equivalent[1]	Module Error Code	Extended Error Information Code	Error Description
		Binary	Binary	
1769-IF8 Specific Configuration Error	X41B	010	0 0001 1011	alarm not enabled (channel 2)
	X41C	010	0 0001 1100	alarm not enabled (channel 3)
	X41D	010	0 0001 1101	alarm not enabled (channel 4)
	X41E	010	0 0001 1110	alarm not enabled (channel 5)
	X41F	010	0 0001 1111	alarm not enabled (channel 6)
	X420	010	0 0010 0000	alarm not enabled (channel 7)
	X421	010	0 0010 0001	invalid alarm data selected (channel 0)
	X422	010	0 0010 0010	invalid alarm data selected (channel 1)
	X423	010	0 0010 0011	invalid alarm data selected (channel 2)
	X424	010	0 0010 0100	invalid alarm data selected (channel 3)
	X425	010	0 0010 0101	invalid alarm data selected (channel 4)
	X426	010	0 0010 0110	invalid alarm data selected (channel 5)
	X427	010	0 0010 0111	invalid alarm data selected (channel 6)
	X428	010	0 0010 1000	invalid alarm data selected (channel 7)
	X429	010	0 0010 1001	invalid real time sample rate value

(1) X represents the “Don’t Care” digit.

Table 5.6 1769-OF8C and -OF8V Extended Error Codes

Error Type	Hex Equivalent[1]	Module Error Code	Extended Error Information Code	Error Description
		Binary	Binary	
No Error	X000	000	0 0000 0000	No Error
General Common Hardware Error	X200	001	0 0000 0000	General hardware error; no additional information
	X201	001	0 0000 0001	Power-up reset state
	X216	001	0 0001 0110	Microprocessor watchdog error
	X220	001	0 0010 0000	Firmware corrupt (checksum failure)
	X221	001	0 0010 0001	Firmware checksum error in NVRAM (calibration data checksum failure)
Hardware-Specific Error	X300	001	1 0000 0000	General hardware error (ASIC)
1769-OF8C and -OF8V Specific Configuration Error	X401	010	0 0000 0001	invalid input range selected (channel 0)
	X402	010	0 0000 0010	invalid input range selected (channel 1)
	X403	010	0 0000 0011	invalid input range selected (channel 2)
	X404	010	0 0000 0100	invalid input range selected (channel 3)
	X405	010	0 0000 0101	invalid input range selected (channel 4)
	X406	010	0 0000 0110	invalid input range selected (channel 5)
	X407	010	0 0000 0111	invalid input range selected (channel 6)
	X408	010	0 0000 1000	invalid input range selected (channel 7)
	X409	010	0 0000 1001	invalid data format selected (channel 0)
	X40A	010	0 0000 1010	invalid data format selected (channel 1)
	X40B	010	0 0000 1011	invalid data format selected (channel 2)
	X40C	010	0 0000 1100	invalid data format selected (channel 3)
	X40D	010	0 0000 1101	invalid data format selected (channel 4)
	X40E	010	0 0000 1110	invalid data format selected (channel 5)
	X40F	010	0 0000 1111	invalid data format selected (channel 6)
	X410	010	0 0001 0000	invalid data format selected (channel 7)
	X411	010	0 0001 0001	invalid fault value (channel 0)
	X412	010	0 0001 0010	invalid fault value (channel 1)
	X413	010	0 0001 0011	invalid fault value (channel 2)
	X414	010	0 0001 0100	invalid fault value (channel 3)
	X415	010	0 0001 0101	invalid fault value (channel 4)
	X416	010	0 0001 0110	invalid fault value (channel 5)
	X417	010	0 0001 0111	invalid fault value (channel 6)
	X418	010	0 0001 1000	invalid fault value (channel 7)
	X419	010	0 0001 1001	invalid idle value (channel 0)

Table 5.6 1769-OF8C and -OF8V Extended Error Codes

Error Type	Hex Equivalent[1]	Module Error Code	Extended Error Information Code	Error Description
		Binary	Binary	
1769-OF8C and -OF8V Specific Configuration Error	X41A	010	0 0001 1010	invalid idle value (channel 1)
	X41B	010	0 0001 1011	invalid idle value (channel 2)
	X41C	010	0 0001 1100	invalid idle value (channel 3)
	X41D	010	0 0001 1011	invalid idle value (channel 4)
	X41E	010	0 0001 1100	invalid idle value (channel 5)
	X41F	010	0 0001 1101	invalid idle value (channel 6)
	X420	010	0 0010 0000	invalid idle value (channel 7)
	X421	010	0 0010 0001	invalid clamps (channel 0)
	X422	010	0 0010 0010	invalid clamps (channel 1)
	X423	010	0 0010 0011	invalid clamps (channel 2)
	X424	010	0 0010 0100	invalid clamps (channel 3)
	X425	010	0 0010 0101	invalid clamps (channel 4)
	X426	010	0 0010 0110	invalid clamps (channel 5)
	X427	010	0 0010 0111	invalid clamps (channel 6)
	X428	010	0 0010 1000	invalid clamps (channel 7)
	X429	010	0 0010 1001	invalid ramp rate (channel 0)
	X42A	010	0 0010 1010	invalid ramp rate (channel 1)
	X42B	010	0 0010 1011	invalid ramp rate (channel 2)
	X42C	010	0 0010 1100	invalid ramp rate (channel 3)
	X42D	010	0 0010 1101	invalid ramp rate (channel 4)
	X42E	010	0 0010 1110	invalid ramp rate (channel 5)
	X42F	010	0 0010 1111	invalid ramp rate (channel 6)
	X430	010	0 0011 0000	invalid ramp rate (channel 7)
	X431	010	0 0011 0001	configuration word 0 illegal bits set (channel 0)
	X432	010	0 0011 0010	configuration word 0 illegal bits set (channel 1)
	X433	010	0 0011 0011	configuration word 0 illegal bits set (channel 2)
	X434	010	0 0011 0100	configuration word 0 illegal bits set (channel 3)
	X435	010	0 0011 0101	configuration word 0 illegal bits set (channel 4)
	X436	010	0 0011 0110	configuration word 0 illegal bits set (channel 5)
	X437	010	0 0011 1011	configuration word 0 illegal bits set (channel 6)
	X438	010	0 0011 1000	configuration word 0 illegal bits set (channel 7)
	X439	010	0 0011 1001	configuration word 1 illegal bits set (channel 0)
	X43A	010	0 0011 1010	configuration word 1 illegal bits set (channel 1)

Table 5.6 1769-OF8C and -OF8V Extended Error Codes

Error Type	Hex Equivalent[1]	Module Error Code	Extended Error Information Code	Error Description
		Binary	Binary	
1769-OF8C and -OF8V Specific Configuration Error	X43B	010	0 0011 1011	configuration word 1 illegal bits set (channel 2)
	X43C	010	0 0011 1100	configuration word 1 illegal bits set (channel 3)
	X43D	010	0 0011 1101	configuration word 1 illegal bits set (channel 4)
	X43E	010	0 0011 1110	configuration word 1 illegal bits set (channel 5)
	X43F	010	0 0011 1111	configuration word 1 illegal bits set (channel 6)
	X440	010	0 0100 0000	configuration word 1 illegal bits set (channel 7)

(1) X represents the "Don't Care" digit.

Module Inhibit Function

CompactLogix controllers support the module inhibit function. See your controller manual for details.

Whenever the output modules are inhibited, the modules enter the program mode and the output channel is changed to the state configured for the program mode. Whenever the input modules are inhibited, the modules continue to provide information about changes at its inputs to the 1769 Compact Bus Master (for example, a CompactLogix controller).

Contacting Rockwell Automation

If you need to contact Rockwell Automation for assistance, please have the following information available when you call:

- a clear statement of the problem, including a description of what the system is actually doing. Note the LED state; also note input and output image words for the module.
- a list of remedies you have already tried
- processor type and firmware number (See the label on the processor.)
- hardware types in the system, including all I/O modules
- fault code if the processor is faulted

Specifications

General Specifications for 1769-IF4, -IF8, -OF2, -OF8C, and -OF8V Modules

Table A.1 General Specifications

Specification	Value
Dimensions	118 mm (height) x 87 mm (depth) x 35 mm (width) [52.5 mm (width) for 1769-IF8] Height including mounting tabs is 138 mm 4.65 in (height) x 3.43 in (depth) x 1.38 in (width) [2.07 in (width) for 1769-IF8] Height including mounting tabs is 5.43 in
Approximate Shipping Weight (with carton)	300g (0.65 lbs.) 1769-IF8 - 450g (0.99 lbs.)
Storage Temperature	-40°C to +85°C (-40°F to +185°F)
Operating Temperature	0°C to +60°C (32°F to +140°F)
Operating Humidity	5% to 95% non-condensing
Operating Altitude	2000 meters (6561 feet)
Vibration	Operating: 10 to 500 Hz, 5G, 0.030 in. peak-to-peak Relay Operation: 2G
Shock	Operating: 30G, 11 ms panel mounted (20G, 11 ms DIN rail mounted) Relay Operation: 7.5G panel mounted (5G DIN rail mounted) Non-Operating: 40G panel mounted (30G DIN rail mounted)
System Power Supply Distance Rating	8 (The module may not be more than 8 modules away from a system power supply.)
Optional 24V dc Class 2 Power Supply Voltage Range (1)	20.4 V to 26.4V dc
Recommended Cable	Belden™ 8761 (shielded)
Maximum Cable Length	1769-IF4 and -IF8: See "Effect of Transducer/Sensor and Cable Length Impedance on Voltage Input Accuracy" on page 2-12 1769-OF2, -OF8C, and -OF8V: See "Effect of Device and Cable Output Impedance on Output Module Accuracy" on page 2-13
Agency Certification	• C-UL certified (under CSA C22.2 No. 142) • UL 508 listed • CE compliant for all applicable directives
Hazardous Environment Class	Class I, Division 2, Hazardous Location, Groups A, B, C, D (UL 1604, C-UL under CSA C22.2 No. 213)
Radiated and Conducted Emissions	EN50081-2 Class A

Specification	Value
Electrical /EMC:	*The module has passed testing at the following levels:*
• ESD Immunity (IEC1000-4-2)	• 4 kV contact, 8 kV air, 4 kV indirect
• Radiated Immunity (IEC1000-4-3)	• 10 V/m , 80 to 1000 MHz, 80% amplitude modulation, +900 MHz keyed carrier
• Fast Transient Burst (IEC1000-4-4)	• 2 kV, 5kHz
• Surge Immunity (IEC1000-4-5)	• 1kV galvanic gun
• Conducted Immunity (IEC1000-4-6)	• 10V, 0.15 to 80MHz[(2)]

(1) Failure to use a Class 2 power supply without regulation within these limits could result in improper module operation.

(2) Conducted Immunity frequency range may be 150 kHz to 30 MHz if the Radiated Immunity frequency range is 30 MHz to 1000 MHz.

1769-IF4 Input Specifications

Table A.2 1769-IF4 Specifications

Specification	1769-IF4 (Series B and later)
Analog Normal Operating Ranges	Voltage: ± 10V dc, 0 to 10V dc, 0 to 5V dc, 1 to 5V dc Current: 0 to 20 mA, 4 to 20 mA
Full Scale(1) Analog Ranges	Voltage: ± 10.5V dc, -0.5 to 10.5V dc, -0.5 to 5.25V dc, 0.5 to 5.25V dc Current: 0 to 21 mA, 3.2 to 21 mA
Number of Inputs	4 differential or single-ended
Bus Current Draw (max.)	120 mA at 5V dc 60 mA at 24V dc(7)
Heat Dissipation	2.63 Total Watts (The Watts per point, plus the minimum Watts, with all points energized.)
Converter Type	Delta Sigma
Response Speed per Channel	Input filter and configuration dependent. See “Channel Step Response” on page 3-6.
Resolution (max.)	14 bits (unipolar) 14 bits plus sign (bipolar) See “Effective Resolution” on page 3-13.
Rated Working Voltage(2)	30V ac/30V dc
Common Mode Voltage Range(3)	±10V maximum per channel
Common Mode Rejection	greater than 60 dB at 50 and 60 Hz with the 50 or 60 Hz filter selected, respectively
Normal Mode Rejection Ratio	-50 dB at 50/60 Hz with the 50 or 60 Hz filter selected, respectively
Input Impedance	Voltage Terminal: 220K Ω (typical) Current Terminal: 250 Ω
Overall Accuracy(4)	Voltage Terminal: ±0.2% full scale at 25°C Current Terminal: ±0.35% full scale at 25°C
Accuracy Drift with Temperature	Voltage Terminal: ±0.003% per °C Current Terminal: ±0.0045% per °C
Calibration	The module performs autocalibration on channel enable and on configuration change between channels.
Non-linearity (in percent full scale)	±0.03%
Repeatability(5)	±0.03%
Module Error over Full Temperature Range (0 to +60°C [+32°F to +140°F])	Voltage: ±0.3% Current: ±0.5%

Specification	1769-IF4 (Series B and later)
Input Channel Configuration	via configuration software screen or the user program (by writing a unique bit pattern into the module's configuration file). Refer to your controller manual to determine if user program configuration is supported.
Module OK LED	On: module has power, has passed internal diagnostics, and is communicating over the bus. Off: Any of the above is not true.
Channel Diagnostics	Over or under range by bit reporting
Maximum Overload at Input Terminals(6)	Voltage Terminal: ±30V continuous, 0.1 mA Current Terminal: ±32 mA continuous, ±7.6 V
Input Group to Backplane Isolation	500V ac or 710V dc for 1 minute (qualification test) 30V ac/30V dc working voltage (IEC Class 2 reinforced insulation)
Vendor I.D. Code	1
Product Type Code	10
Product Code	35

(1) The over- or under-range flag will come on when the normal operating range (over/under) is exceeded. The module will continue to convert the analog input up to the maximum full scale range. The flag automatically resets when within the normal operating range.

(2) Rated working voltage is the maximum continuous voltage that can be applied at the input terminal, including the input signal and the value that floats above ground potential (for example, 10V dc input signal and 20V dc potential above ground).

(3) For proper operation, both the plus and minus input terminals must be within ±10V dc of analog common.

(4) Includes offset, gain, non-linearity and repeatability error terms.

(5) Repeatability is the ability of the input module to register the same reading in successive measurements for the same input signal.

(6) Damage to the input circuit may occur if this value is exceeded.

(7) If the optional 24V dc Class 2 power supply is used, the 24V dc current draw from the bus is 0 mA.

1769-IF8 Input Specifications

Table A.3 1769-IF8 Specifications

Specification	1769-IF8
Analog Normal Operating Ranges[1]	Voltage: ± 10V dc, 0 to 10V dc, 0 to 5V dc, 1 to 5V dc Current: 0 to 20 mA, 4 to 20 mA
Full Scale Analog Ranges[1]	Voltage: ± 10.5V dc, 0 to 10.5V dc, 0 to 5.25V dc, 0.5 to 5.25V dc Current: 0 to 21 mA, 3.2 to 21 mA
Number of Inputs	8 differential or single-ended
Bus Current Draw (max.)	120 mA at 5V dc 70 mA at 24V dc
Heat Dissipation	3.24 Total Watts (The Watts per point, plus the minimum Watts, with all points energized.)
Converter Type	Delta Sigma
Response Speed per Channel	Input filter and configuration dependent. See your user's manual.
Resolution (max.)[2]	16 bits (unipolar) 15 bits plus sign (bipolar)
Rated Working Voltage[3]	30V ac/30V dc
Common Mode Voltage Range[4]	±10V dc maximum per channel
Common Mode Rejection	greater than 60 dB at 50 and 60 Hz with the 10 Hz filter selected, respectively.
Normal Mode Rejection Ratio	-50 dB at 50 and 60 Hz with the 10 Hz filter selected, respectively.
Input Impedance	Voltage Terminal: 220K Ω (typical) Current Terminal: 250 Ω
Overall Accuracy[5]	Voltage Terminal: ±0.2% full scale at 25°C Current Terminal: ±0.35% full scale at 25°C

(1) The over- or under-range flag will come on when the normal operating range (over/under) is exceeded. The module will continue to convert the analog input up to the maximum full scale range. The flag automatically resets when within the normal operating range.

(2) Resolution is dependent upon your filter selection. The maximum resolution is achieved with the 10 Hz filter selected. For resolution with other filter selections, refer to the user manual, publication 1769-UM002.

(3) Rated working voltage is the maximum continuous voltage that can be applied at the input terminal, including the input signal and the value that floats above ground potential (for example, 10V dc input signal and 20V dc potential above ground).

(4) For proper operation, both the plus and minus input terminals must be within ±10V dc of analog common.

(5) Includes offset, gain, non-linearity and repeatability error terms.

Specification	1769-IF8
Accuracy Drift with Temperature	Voltage Terminal: ±0.003% per °C Current Terminal: ±0.0045% per °C
Calibration	The module performs autocalibration on channel enable and on a configuration change between channels.
Non-linearity (in percent full scale)	±0.03%
Repeatability[1]	±0.03%
Module Error over Full Temperature Range (0 to +60°C [+32°F to +140°F])	Voltage: ±0.3% Current: ±0.5%
Input Channel Configuration	via configuration software screen or the user program (by writing a unique bit pattern into the module's configuration file). Refer to your controller's user manual to determine if user program configuration is supported.
Module OK LED	On: module has power, has passed internal diagnostics, and is communicating over the bus. Off: Any of the above is not true.
Channel Diagnostics	Over- or under-range by bit reporting, process alarms
Maximum Overload at Input Terminals[2]	Voltage Terminal: ±30V dc continuous, 0.1 mA Current Terminal: ±32 mA continuous, ±7.6 V dc
System Power Supply Distance Rating	8 (The module may not be more than 8 modules away from the system power supply.)
Recommended Cable	Belden™ 8761 (shielded)
Input Group to Bus Isolation	500V ac or 710V dc for 1 minute (qualification test) 30V ac/30V dc working voltage (IEC Class 2 reinforced insulation)
Vendor I.D. Code	1
Product Type Code	10
Product Code	38

(1) Repeatability is the ability of the input module to register the same reading in successive measurements for the same input signal.

(2) Damage may occur to the input circuit if this value is exceeded.

1769-OF2 Output Specifications

Table A.4 1769-OF2 Specifications

Specification	1769-OF2 (Series B and later)
Analog Ranges[1]	Voltage: ±10V dc, 0 to 10V dc, 0 to 5V dc, 1 to 5V dc Current: 0 to 20 mA, 4 to 20 mA
Full Scale Analog Ranges	Voltage: ±10.5V dc, -0.5 to 10.5V dc, -0.5 to 5.25V dc, 0.5 to 5.25V dc Current: 0 - 21 mA, 3.2 - 21 mA
Number of Outputs	2 single-ended
Bus Current Draw (max.)	120 mA at 5V dc 120 mA at 24V dc[7]
Heat Dissipation	2.52 Total Watts *(The Watts per point, plus the minimum Watts, with all points energized.)*
Converter Type	Sigma-Delta
Analog Data Format	14-bit, two's complement. The Most Significant Bit is the sign bit.
Digital Resolution Across Full Range	14 bits (unipolar) 14 bits plus sign (bipolar) See "1769-OF2 Module Resolution" on page 4-15.
Conversion Rate (all channels) max.	2.5 ms
Step Response to 63%[2]	2.9 ms
Current Load on Voltage Output	10 mA max.
Resistive Load on Current Output	0 to 500 Ω (includes wire resistance)
Load Range on Voltage Output	>1 kΩ at 10V dc
Max. Inductive Load (Current Outputs)	0.1 mH
Max. Capacitive Load (Voltage Outputs)	1 µF
Overall Accuracy[3]	Voltage Terminal: ±0.5% full scale at 25°C Current Terminal: ±0.35% full scale at 25°C
Accuracy Drift with Temperature	Voltage Terminal: ±0.0086% FS per °C Current Terminal: ±0.0058% FS per °C
Output Ripple;[4] range 0 - 50 kHz (referred to output range)	±0.05%
Calibration	None required (guaranteed by hardware design).
Non-linearity (in percent full scale)	±0.05%
Repeatability[5] (in percent full scale)	±0.05%

Specification	1769-OF2 (Series B and later)
Output Error Over Full Temperature Range (0 to 60°C [32 to +140°F])	Voltage: ±0.8% Current: ±0.55%
Output Offset Error (0 to 60°C [32 to +140°F])	±0.05%
Output Impedance	15 Ω (typical)
Open and Short-Circuit Protection	Yes
Maximum Short-Circuit Current	21 mA
Output Overvoltage Protection	Yes
Time to Detect Open Wire Condition (Current Mode)	10 ms typical 13.5 ms maximum
Output Response at Power Up and Power Down	±0.5 V spike for <5 ms
Rated Working Voltage(6)	30V ac/30V dc
Module OK LED	On: module has power, has passed internal diagnostics, and is communicating over the bus. Off: Any of the above is not true.
Channel Diagnostics	Over or under range by bit reporting output wire broken or load resistance high by bit reporting (current mode only)
Output Group to Backplane Isolation	500V ac or 710V dc for 1 minute (qualification test) 30V ac/30V dc working voltage (IEC Class 2 reinforced insulation)
Vendor I.D. Code	1
Product Type Code	10
Product Code	32

(1) The over- or under-range flag will come on when the normal operating range (over/under) is exceeded. The module will continue to convert the analog input up to the maximum full scale range. The flag automatically resets when within the normal operating range.

(2) Step response is the period of time between when the D/A converter was instructed to go from minimum to full range until the device is at 63% of full range. Time applies to one or both channels.

(3) Includes offset, gain, non-linearity and repeatability error terms.

(4) Output ripple is the amount a fixed output varies with time, assuming a constant load and temperature.

(5) Repeatability is the ability of the output module to reproduce output readings when the same controller value is applied to it consecutively, under the same conditions and in the same direction.

(6) Rated working voltage is the maximum continuous voltage that can be applied at the input terminal, including the input signal and the value that floats above ground potential (for example, 10V dc input signal and 20V dc potential above ground).

(7) If the optional 24V dc Class 2 power supply is used, the 24V dc current draw from the bus is 0 mA.

1769-OF8C Output Specifications

Table A.5 1769-OF8C Specifications

Specification	1769-OF8C
Analog Normal Operating Ranges[1]	0 to 20 mA, 4 to 20 mA
Full Scale Analog Ranges[1]	0 to 21 mA, 3.2 to 21 mA
Number of Outputs	8 single-ended
Bus Current Draw (max.)	145 mA at 5V dc 160 mA at 24V dc[2]
Heat Dissipation	2.69 Total Watts *(All points - 21 mA into 250Ω - worst case calculated.)*
Digital Resolution Across Full Range	16 bits (unipolar) +4 to +20 mA: 15.59 bits, 0.323 µA/bit 0 to +20 mA: 15.91 bits, 0.323 µA/bit
Conversion Rate (all channels) max.	5 ms
Step Response to 63%[3]	<2.9 ms
Resistive Load on Current Output	0 to 500 Ω (includes wire resistance)
Max. Inductive Load	0.1 mH
Field Calibration	None required
Overall Accuracy[4]	±0.35% full scale at 25°C

(1) The over- or under-range flag will come on when the normal operating range (over/under) is exceeded. The module will continue to convert the analog input up to the maximum full scale range. The flag automatically resets when within the normal operating range unless configured to latch.

(2) If the optional 24V dc Class 2 power supply is used, the 24V dc current draw from the bus is 0 mA.

(3) Step response is the period of time between when the D/A converter was instructed to go from minimum to full range until the device is at 63% of full range.

(4) Includes offset, gain, drift, non-linearity and repeatability error terms.

Specification	1769-OF8C
Accuracy Drift with Temperature	±0.0058% FS per °C
Output Ripple[1] range 0 to 50 kHz (referred to output range)	±0.05%
Non-linearity (in percent full scale)	±0.05%
Repeatability[2] (in percent full scale)	±0.05%
Output Error Over Full Temperature Range (0 to 60°C [+32 to +140°F])	Current: ±0.55%
Output Offset Error (0 to 60°C [+32 to +140°F])	±0.05%
Output Impedance	>1 MΩ
Open and Short-Circuit Protection	Yes
Maximum Short-Circuit Current	21 mA
Output Overvoltage Protection	Yes
Time to Detect Open Wire Condition	5 ms
Output Response at System Power Up and Power Down	± 0.5V dc spike for < 5 ms
Rated Working Voltage[3]	30V ac/30V dc
Output Group to Bus Isolation	500V ac or 710V dc for 1 minute (qualification test) 30V ac/30V dc working voltage (IEC Class 2 reinforced insulation)
Module OK LED	On: module has power, has passed internal diagnostics, and is communicating over the bus. Flashing: external power failure. Off: Any of the above is not true.
Channel Diagnostics	Over- or under-range by bit reporting output wire broken or load resistance high by bit reporting

(1) Output ripple is the amount a fixed output varies with time, assuming a constant load and temperature.

(2) Repeatability is the ability of the output module to reproduce output readings when the same controller value is applied to it consecutively, under the same conditions and in the same direction.

(3) Rated working voltage is the maximum continuous voltage that can be applied at the input terminal, including the input signal and the value that floats above ground potential (for example, 10V dc input signal and 20V dc potential above ground).

1769-OF8V Output Specifications

Table A.6 1769-OF8V Specifications

Specification	1769-OF8V
Analog Normal Operating Ranges[1]	± 10V dc, 0 to 10V dc, 0 to 5V dc, 1 to 5V dc
Full Scale Analog Ranges[1]	± 10.5V dc, -0.5 to 10.5V dc, -0.5 to 5.25V dc, 0.5 to 5.25V dc
Number of Outputs	8 single-ended
Bus Current Draw (max.)	145 mA at 5V dc 125 mA at 24V dc[2]
Heat Dissipation	2.16 Total Watts *(All points - 10.5V into 1 kΩ - worst case calculated.)*
Digital Resolution Across Full Range	16 bits plus sign (bipolar) ±10V dc: 15.89 bits, 330 µV/bit 0 to +5V dc: 13.89 bits, 330 µV/bit 0 to +10V dc: 14.89 bits, 330 µV/bit +1 to +5V dc: 13.57 bits, 330 µV/bit
Conversion Rate (all channels) max.	5.0 ms
Step Response to 63%[3]	<2.9 ms
Current Load Output	10 mA max.
Load Range Output	> 1 kΩ at 10V dc
Max. Capacitive Load	1 µF
Field Calibration	None required
Overall Accuracy[4]	±0.5% full scale at 25°C

(1) The over- or under-range flag will come on when the normal operating range (over/under) is exceeded. The module will continue to convert the analog input up to the maximum full scale range. The flag automatically resets when within the normal operating range.

(2) If the optional 24V dc Class 2 power supply is used, the 24V dc current draw from the bus is 0 mA.

(3) Step response is the period of time between when the D/A converter was instructed to go from minimum to full range until the device is at 63% of full range.

(4) Includes offset, gain, drift, non-linearity and repeatability error terms.

Specification	1769-OF8V
Accuracy Drift with Temperature	±0.0086% FS per °C
Output Ripple[1] range 0 to 50 kHz (referred to output range)	±0.05%
Non-linearity (in percent full scale)	±0.05%
Repeatability[2] (in percent full scale)	±0.05%
Output Error Over Full Temperature Range (0 to 60°C [+32 to +140°F])	±0.8%
Output Offset Error (0 to 60°C [+32 to +140°F])	±0.05%
Output Impedance	<1 Ω
Open and Short-Circuit Protection	Yes
Maximum Short-Circuit Current	30 mA
Output Overvoltage Protection	Yes
Output Response at System Power Up and Power Down	± 0.5V dc spike for < 5 ms
Rated Working Voltage[3]	30V ac/30V dc
Output Group to Bus Isolation	500V ac or 710V dc for 1 minute (qualification test) 30V ac/30V dc working voltage (IEC Class 2 reinforced insulation)
Module OK LED	On: module has power, has passed internal diagnostics, and is communicating over the bus. Flashing: external power failure. Off: Any of the above is not true.
Channel Diagnostics	Over- or under-range by bit reporting

(1) Output ripple is the amount a fixed output varies with time, assuming a constant load and temperature.

(2) Repeatability is the ability of the output module to reproduce output readings when the same controller value is applied to it consecutively, under the same conditions and in the same direction.

(3) Rated working voltage is the maximum continuous voltage that can be applied at the input terminal, including the input signal and the value that floats above ground potential (for example, 10V dc input signal and 20V dc potential above ground).

Module Addressing and Configuration with MicroLogix 1500

This chapter examines the analog modules' addressing scheme and describes module configuration using RSLogix 500 and MicroLogix 1500.

Input Module Addressing

In the following example, the 1769-IF4 is used. Detailed information on the input image table can be found in 1769-IF4 Input Data File on page 3-2.

Figure B.1 1769-IF4 Memory Map Including Configuration

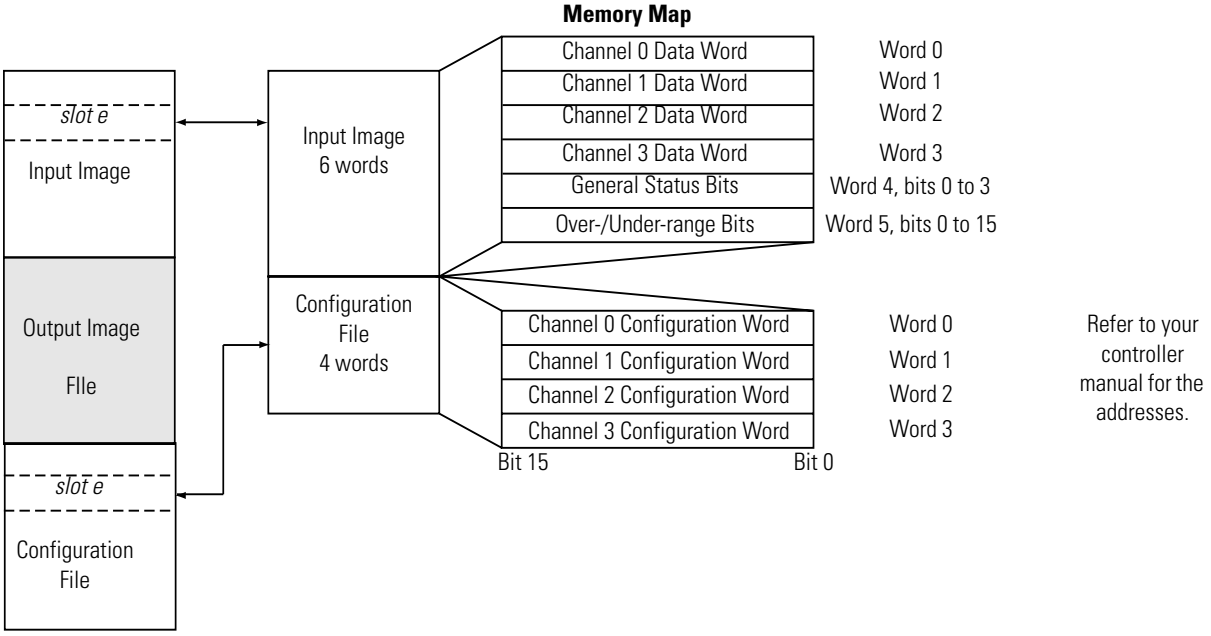

Input Modules Input Image

The input modules' input image file represents data words and status bits. Input words 0 through 3 hold the input data that represents the value of the analog inputs for channels 0 through 3. These data words are valid only when the channel is enabled and there are no errors. Input words 4 and 5 hold the status bits. To receive valid status information, the channel must be enabled.

For example, to obtain the general status of channel 2 of the analog module located in slot 3, use address I:3.4/2.

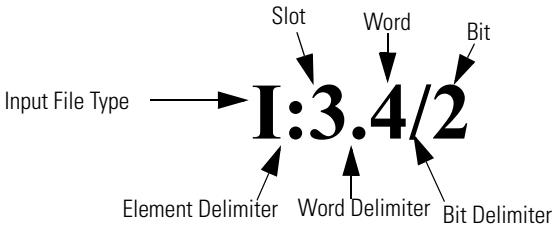

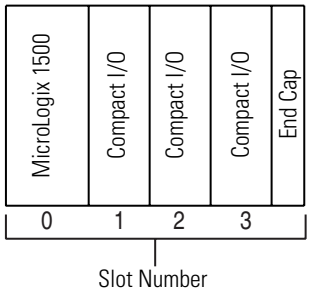

TIP The end cap does not use a slot address.

Input Modules' Configuration File

The configuration file contains information that you use to define the way a specific channel functions. The configuration file is explained in more detail in chapter 4.

The configuration file is modified using the programming software configuration screen. For an example of module configuration using RSLogix 500, see Configuring Analog I/O Modules in a MicroLogix 1500 System on page B-4.

TIP The RSLogix 500 configuration default is to enable each analog input channel. For improved analog input module performance, disable any *unused* channels.

Table B.1 Software Configuration Channel Defaults

1769-IF4 and -IF8		1769-OF2, -OF8C, and -OF8V	
Parameter	**Default Setting**	**Parameter**	**Default Setting**
Enable/Disable Channel[1]	Enabled	Enable/Disable Channel	Enabled
Filter Selection	60 Hz	Output Range Selection	±10V dc
Input Range	±10V dc	Data Format	Raw/Proportional
Data Format	Raw/Proportional		

(1) The 1769-IF4, -IF8, -OF2, -OF8C, and -OF8V modules are disabled by default. You will need to enable the channels.

Configuring Analog I/O Modules in a MicroLogix 1500 System

This example takes you through configuring your 1769 analog input and output modules with RSLogix 500 programming software. This application example assumes your input and output modules are installed as expansion I/O in a MicroLogix 1500 system, and that RSLinx™ is properly configured and a communications link has been established between the MicroLogix processor and RSLogix 500.

Start RSLogix and create a MicroLogix 1500 application. The following screen appears:

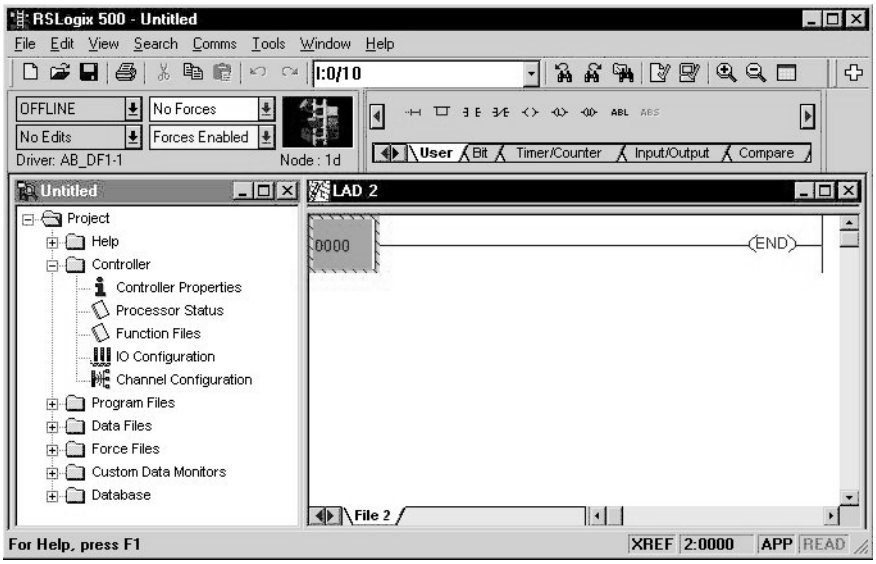

While offline, double-click on the IO Configuration icon under the controller folder and the following IO Configuration screen appears.

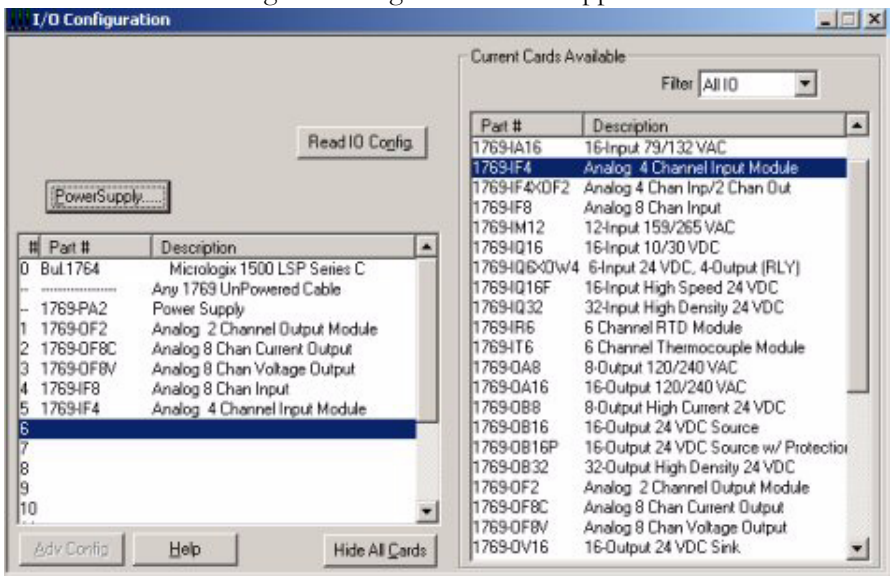

This screen allows you to manually enter expansion modules into expansion slots, or to automatically read the configuration of the controller. To read the existing controller configuration, click on the Read IO Config button.

A communications dialog appears, identifying the current communications configuration so that you can verify the target controller. If the communication settings are correct, click on Read IO Config.

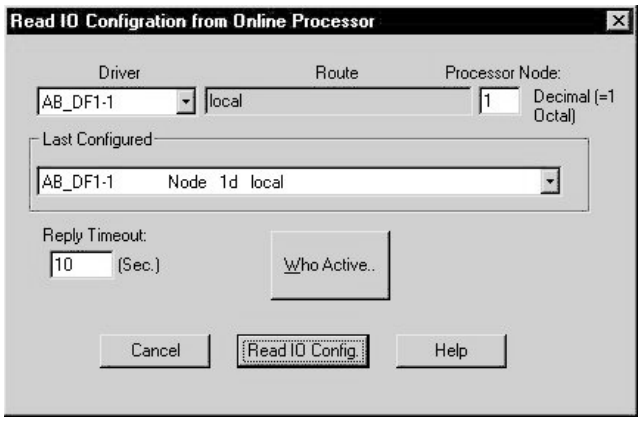

The actual I/O configuration is displayed. In this example, a second tier of I/O is attached to the MicroLogix 1500 processor.

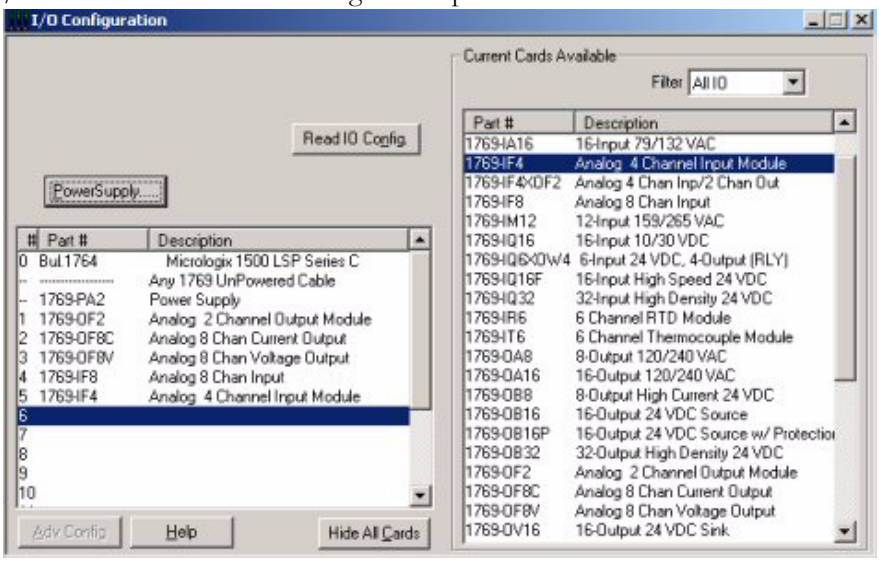

Configuring the Input Modules

For this example, the 1769-IF4 analog input module is installed in slot 1. To configure the module, double-click on the module/slot.

Analog Input Configuration

Each of the four analog input words (channels) are enabled by default. To enable a channel, click its Enable box so that a check mark appears in it. For optimum module performance, disable any channel that is not hardwired to a real input. Then, choose your Filter Frequency, Input Range, and Data Format for each channel.

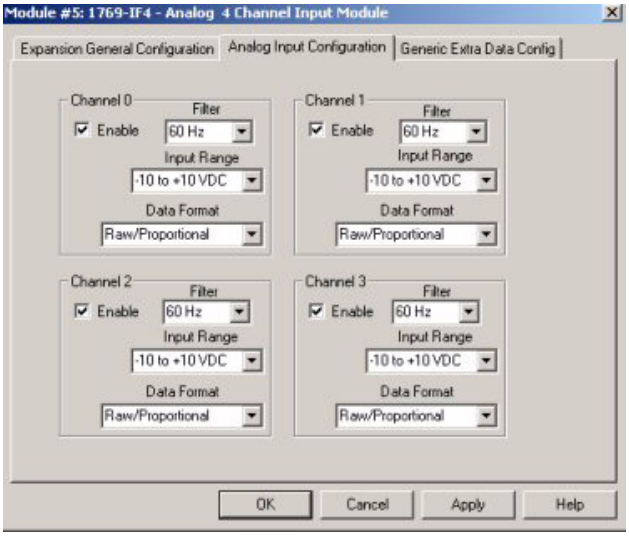

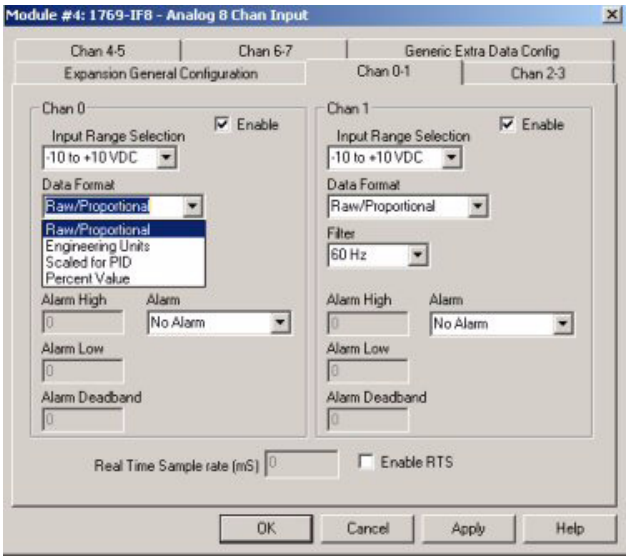

TIP For maximum noise immunity, choose 50 Hz. For the highest speed (fastest signal detection), choose 250 Hz.

Configuring the Output Modules

For this example, the 1769-OF2 analog output module is installed in slot 2. To configure the 1769-OF2, double-click on the module/slot.

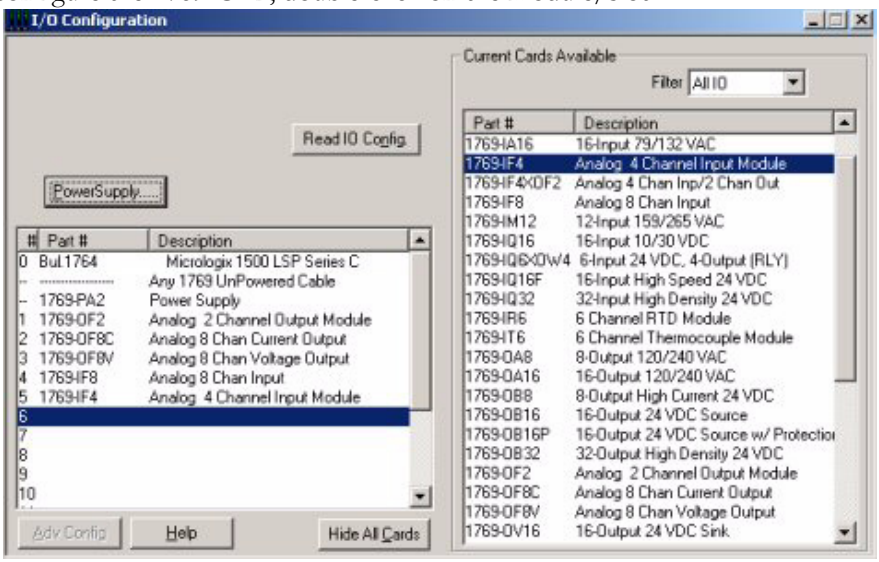

The following general configuration screen appears for the 1769-OF2, -OF8C, and -OF8V output modules.

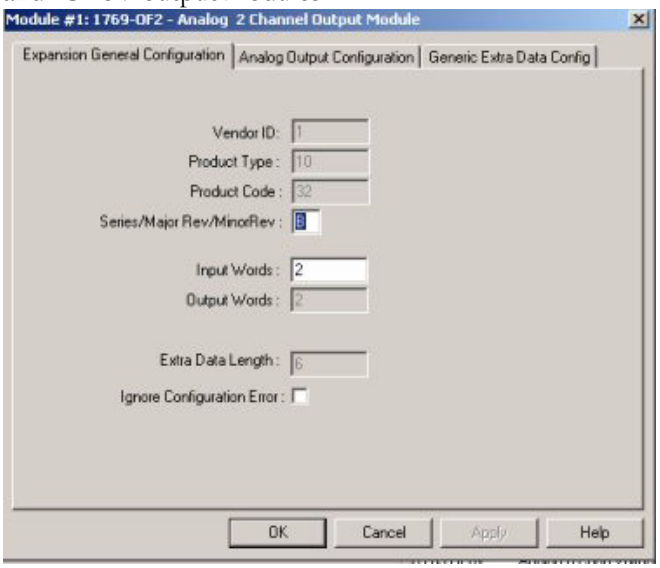

Analog Output Configuration

Both of the output words (channels) are enabled by default. To enable a channel, click its Enable box so that a check mark appears in it. For optimum module performance, disable any channel that is not hardwired to a real input. Then, choose your Filter Frequency, Input Range, and Data Format for each channel.

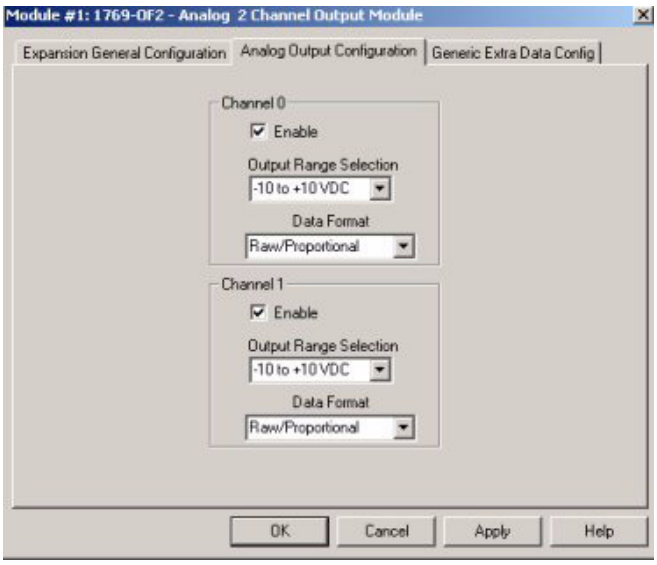

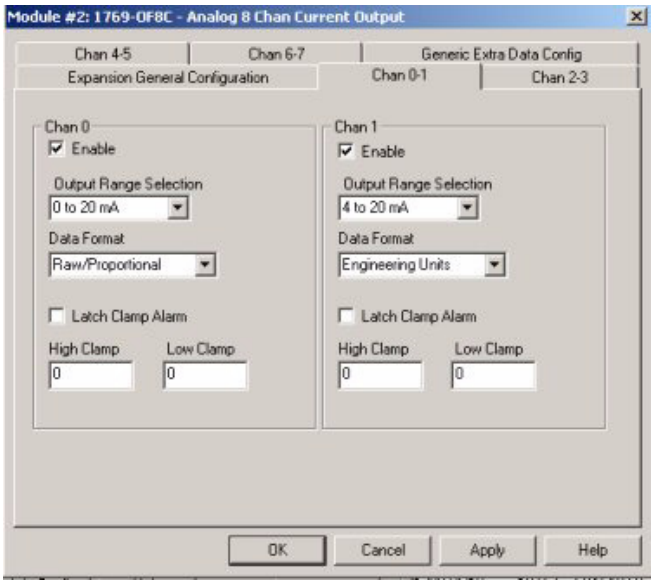

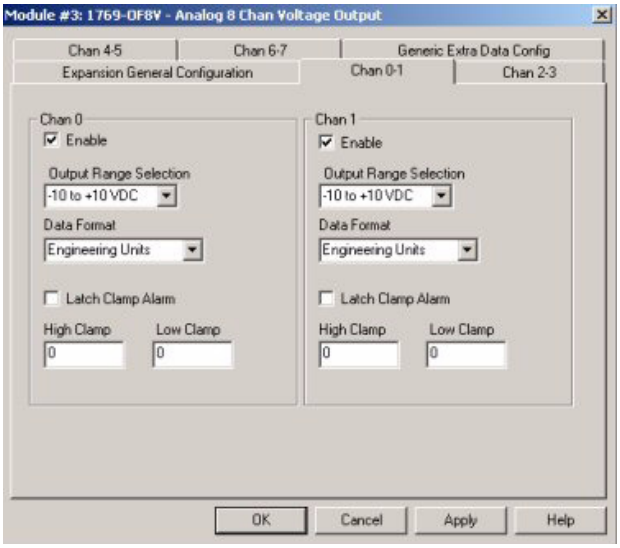
Module #3: 1769-OF8V - Analog 8 Chan Voltage Output
Chan 4-5
Chan 6-7
Generic Extra Data Config
Expansion General Configuration
Chan 0-1
Chan 2-3
Chan 0
Enable
Output Range Selection
-10 to +10 VDC
Data Format
Engineering Units
Latch Clamp Alarm
High Clamp
Low Clamp
0
0
Chan 1
Enable
Output Range Selection
-10 to +10 VDC
Data Format
Engineering Units
Latch Clamp Alarm
High Clamp
Low Clamp
0
0
OK
Cancel
Apply
Help

Notes:

Configuration Using the RSLogix 5000 Generic Profile for CompactLogix Controllers

To configure a 1769 analog I/O module for a CompactLogix Controller in RSLogix 5000 using the Generic Profile, you must first begin a new project in RSLogix 5000. Click on the new project icon or on the FILE pull down menu and select NEW. The following screen appears:

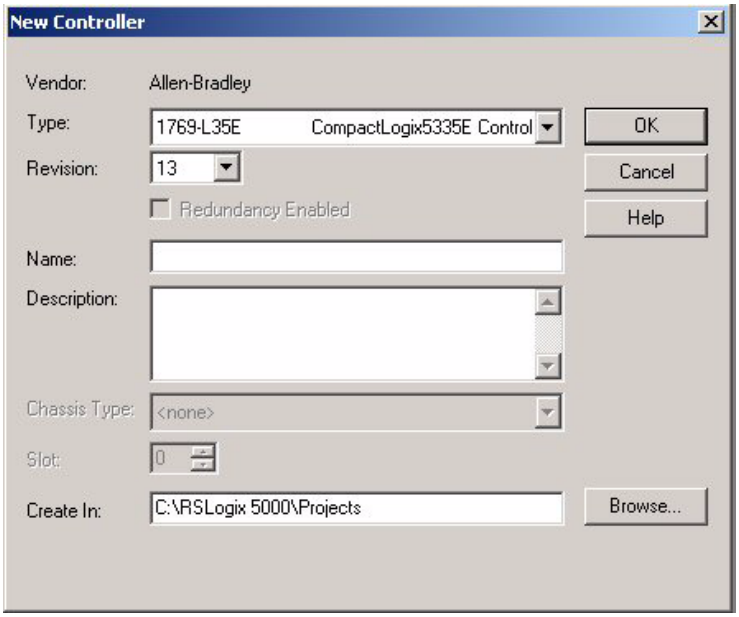

Choose your controller type and enter a name for your project, then click OK. The following main RSLogix 5000 screen appears:

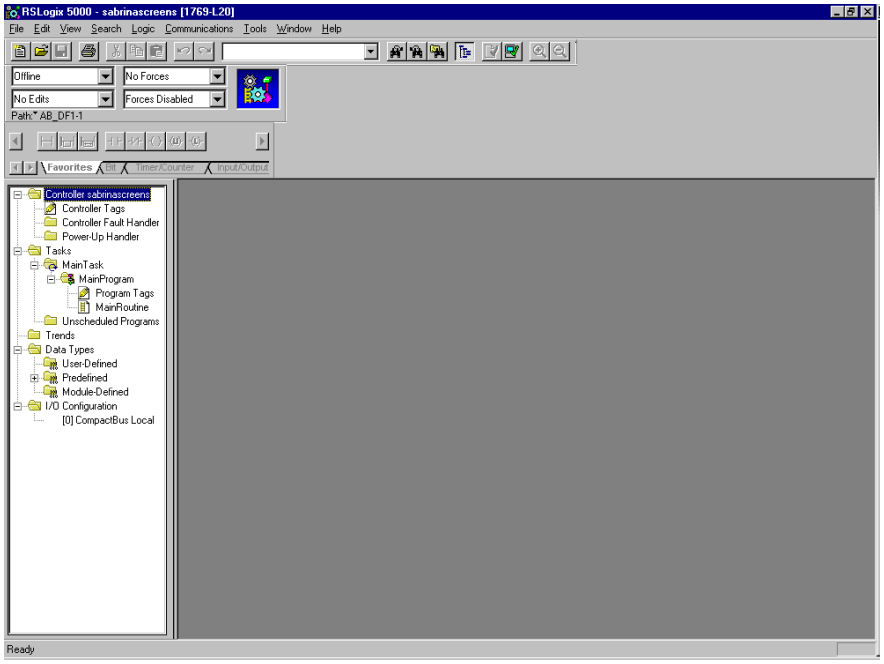

The last entry in the controller organizer on the left of the screen shown above is a line labeled "[0] CompactBus Local". Right click on this line, select "New Module" and the following screen appears:

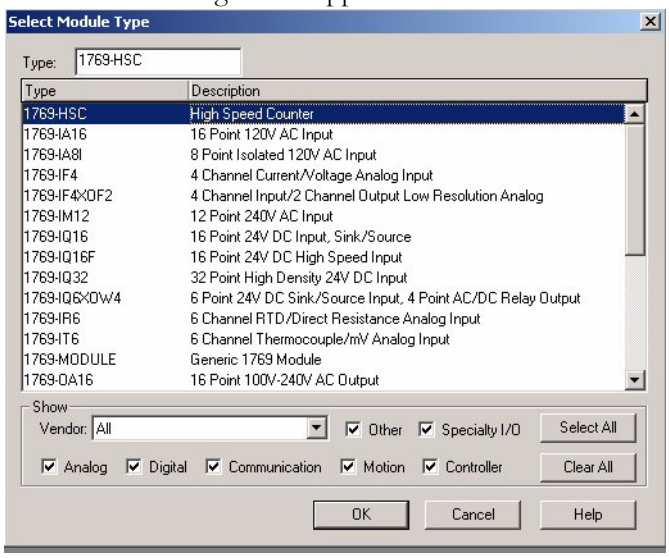

This screen narrows your search for I/O modules to configure into your system. Click the OK button and the following default Generic Profile screen appears:

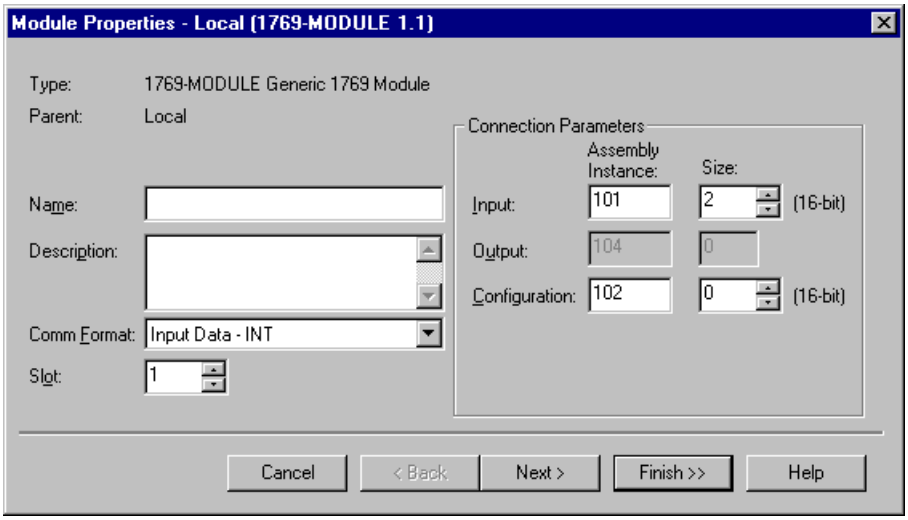

This is the default Generic Profile screen. The first area to fill in for the Generic Profile screen is the name. This helps to easily identify the module type configured on your local Compact Bus. The "Description" field is optional and may be used to provide more details concerning this I/O module in your application.

The next parameter to configure is the "Comm Format". Click the down arrow for this parameter to reveal the choices. For the 1769-OF8C and -OF8V modules, "Data – INT" is used. "Input Data –INT" is used for the 1769-IF8 module.

The slot number must be selected next, even though it begins with the first available slot number, 1, and increments automatically for each subsequent Generic Profile you configure.

Use the following table for the “Comm Format”, “Assembly Instance” and “Size” values for the 1769-IF8, -OF8C, and -OF8V modules if you have an earlier version of RSLogix5000, version 15.

1769 I/O Modules[1]	Comm Format	Parameter	Assembly Instance	Size (16-bit)
IF8	Input Data – INT	Input	101	12
		Output	100	1
		Config	102	50
OF8C and OF8V	Data – INT	Input	101	11
		Output	100	9
		Config	102	64

(1) 1769-OF2 and -IF4 modules do not use the generic profile.

Note the Comm Format, Assembly Instance numbers and their associated sizes for each analog I/O module type and enter them into the Generic Profile.

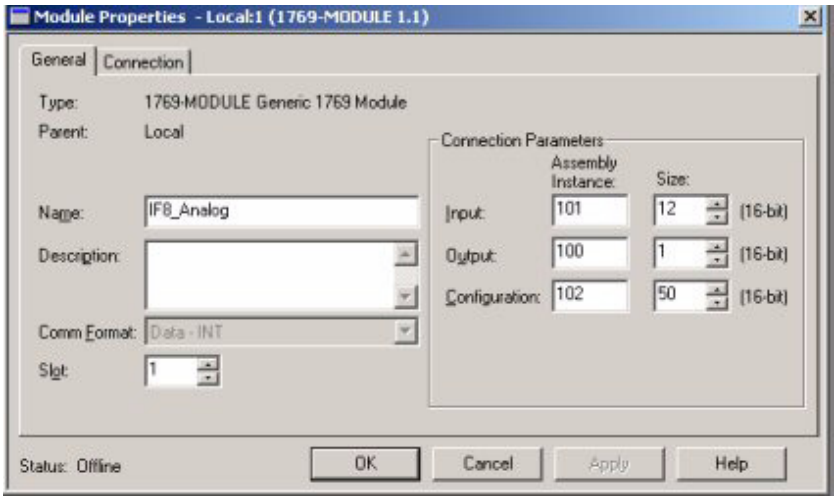

At this point, you may click “Finish” to complete the configuration of your I/O module. If you click “Next”, the following screen appears:

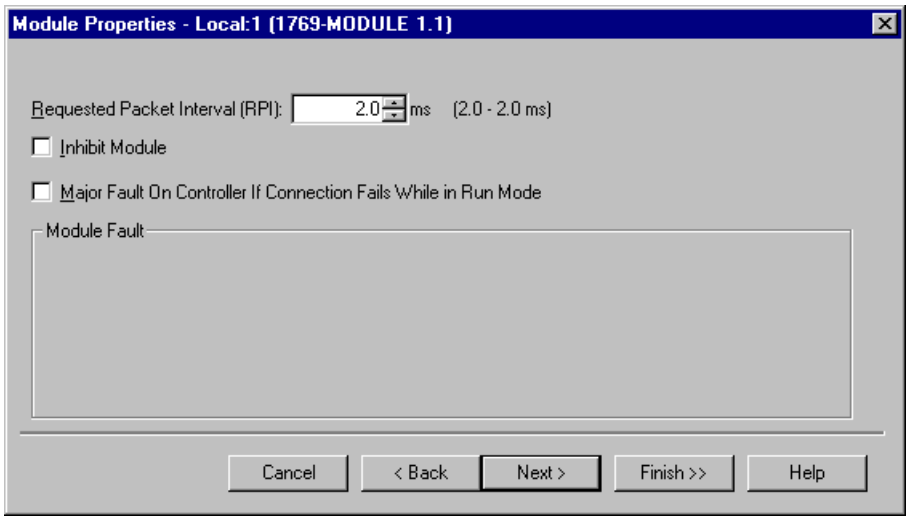

You may choose to inhibit the module or have the controller fault if the connection to this I/O module fails. The defaults for these two parameters are not to inhibit the module and not to fault the controller should an I/O module connection fail.

TIP Refer to the Help screens in RSLogix 5000, under “Connection Tab Overview” for a complete explanation of these features.

You may now click “Finish” to complete the configuration of your analog output module. If you click “Next”, you will see the Module Information screen, which is only filled in when you are online with your controller. If you clicked “Next” to get the Module Information screen, click “Finish” to complete the configuration of your I/O module.

Configure each analog I/O module in this manner.

Configuring I/O Modules

Once you have created Generic Profiles for each analog I/O module in your system, you must then enter configuration information into the Tag database that has been automatically created from the Generic Profile information you entered for each of these modules. This configuration information is downloaded to each module at program download, going to run, and at power up.

This section shows how and where to enter configuration data for each analog I/O module, once Generic Profiles have been created for them.

You must first enter the Controller Tag database, by double-clicking on "Controller Tags" in the upper portion of the controller organizer. The example to follow demonstrates entering configuration data for 1769-OF2 and -IF4 modules.

For demonstration purposes, Generic Profiles have been created for 1769-IF8, -OF8C, and -OF8V modules. The Controller Tags screen looks like the following:

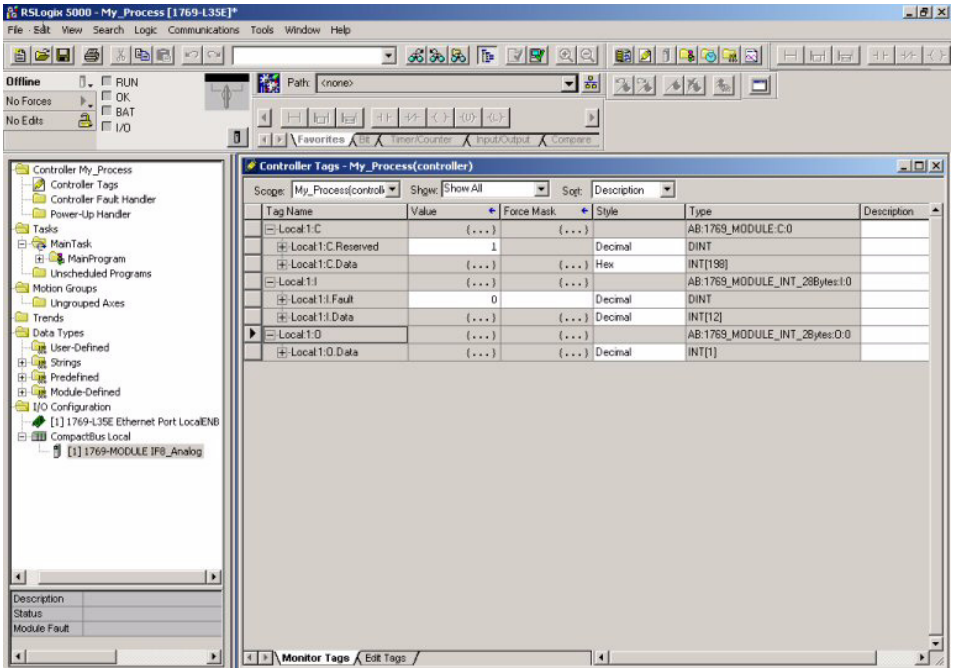

Tag addresses are automatically created for configured I/O modules. All local I/O addresses are preceded by the word Local. These addresses have the following format:

- Input Data: Local:s.I
- Output Data: Local:s.O
- Configuration Data: Local:s.C

  where s is the slot number assigned the I/O modules in the Generic Profiles.

In order to configure an I/O module, you must open up the configuration tag for that module by clicking on the plus sign to the left of its configuration tag in the tag data base.

Configuring Analog Output Modules

To configure the 1769-OF8C or -OF8V module in slot 1, click on the plus sign left of Local:1.C. Configuration data is entered under the Local:1.C.Data tag. Click the plus sign to the left of Local:1.C.Data to reveal the 8 integer data words where configuration data may be entered for the 1769-OF8C or -OF8V module.

Configuring Analog Input Modules

To configure the input modules in slot 2, click on the plus sign left of Local:2.C. Click on the plus sign to the left of Local:2.C.Data to reveal the 4 integer data words where the configuration data may be entered for the module. The tag addresses for these 4 words are Local:2.C.Data[0] through Local:2.C.Data[3].

Notes:

Configuring Modules in a Remote DeviceNet System with a 1769-ADN DeviceNet Adapter

Overview

In this example, the 1769-IF4 and 1769-OF8C modules are in a remote DeviceNet system controlled by a 1769-ADN DeviceNet adapter. RSNetWorx for DeviceNet software, version 2.23 or later, is used to configure the network and the I/O modules.

The configuration method described here must be done prior to configuring the DeviceNet adapter in the DeviceNet scanner's scanlist. This applies if you are configuring an I/O module offline, then downloading to the adapter, or if you do the configuration online. After the adapter is placed in the scanner's scanlist, you can only configure or re-configure the I/O module using explicit messages or by removing the adapter from the scanner's scanlist, modifying the configuration of the I/O module, and then adding the adapter back into the scanner's scanlist.

For additional information on configuring DeviceNet scanners and adapters, refer to the documentation for those products. The DeviceNet Adapter User Manual, publication 1769-UM001, contains examples on modifying I/O module configurations with explicit messages while the system is running.

IMPORTANT You must use a Series B 1769-ADN adapter with the 1769-IF8, -OF8C, and -OF8V modules.

TIP After setting up each slot, be sure to choose Apply.

Add the DeviceNet Adapter to the Scanlist

In this part of the example, the 1769-ADN adapter is added to the DeviceNet scanner's scanlist.

1. Start the RSNetWorx for DeviceNet software.

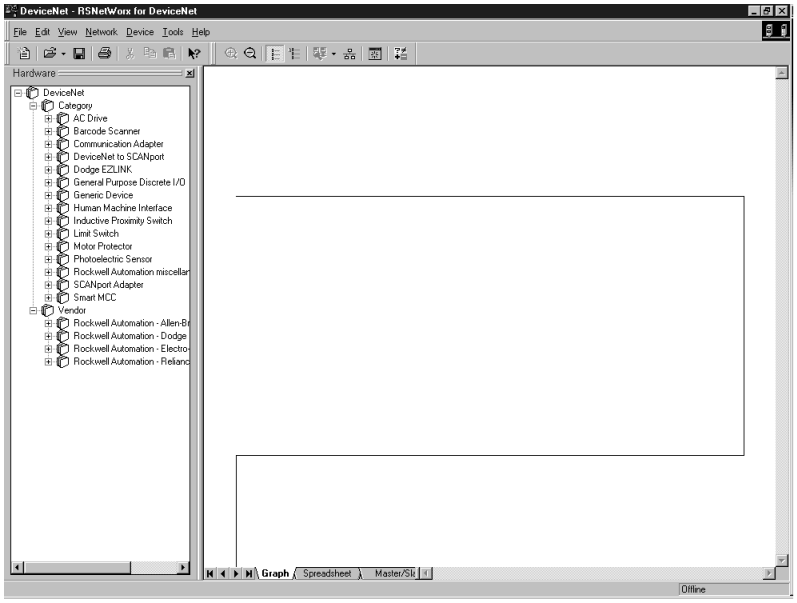

2. In the left column under Category, click the + sign next to Communication Adapters.

3. In the list of products, double-click the 1769-ADN to place it on the network.

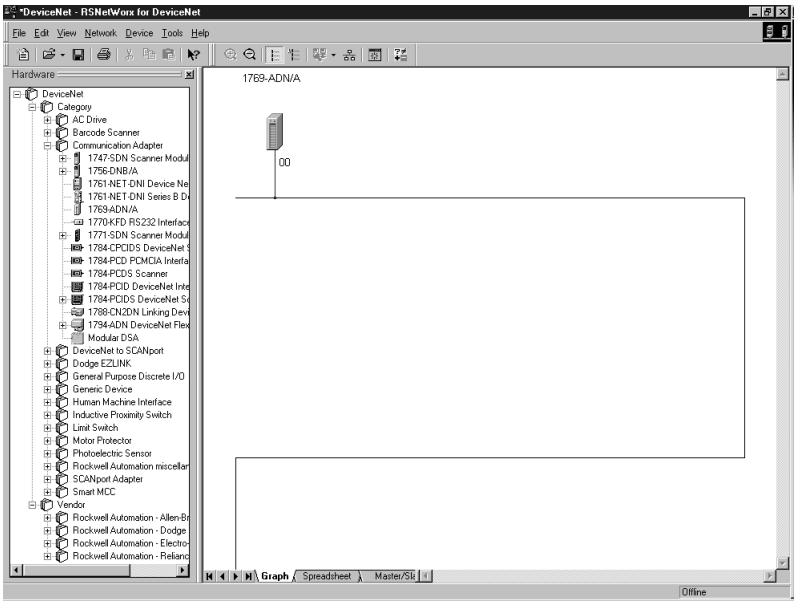

TIP If 1769-ADN is not an option, you have an earlier version of RSNetWorx for DeviceNet software.

4. To configure I/O for the adapter, double-click the adapter icon that appears on the network.

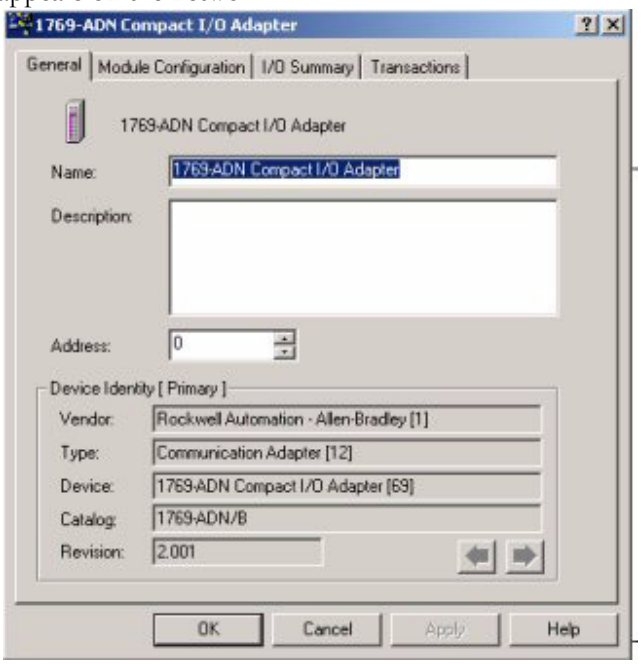

5. Click the Module Configuration tab.

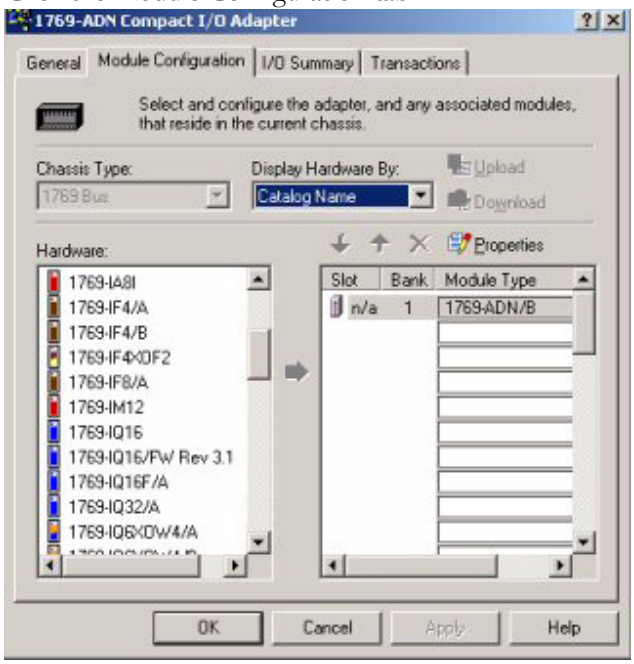

TIP

The I/O Summary tab provides the configured sized and format of the I/O data.

The Transaction tab lets you send services supported by the device. The Clear/Reset Memory transaction returns the module's configuration to the factory defaults, that is, empty. This operation cannot be undone.

Configure the 1769-IF4 Input Module Example

The 1769-ADN adapter appears in slot 0. Your I/O modules, power supplies, end caps, and interconnect cables must be entered in the proper order, following the 1769 I/O rules contained in the DeviceNet Adapter User Manual, publication 1769-UM001A. To simplify this example, we placed the 1769-IF4 in slot 1 to show how it is configured.

1. To place the input module into slot 1, click Module Configuration.

   A list of all possible 1769 products appears.

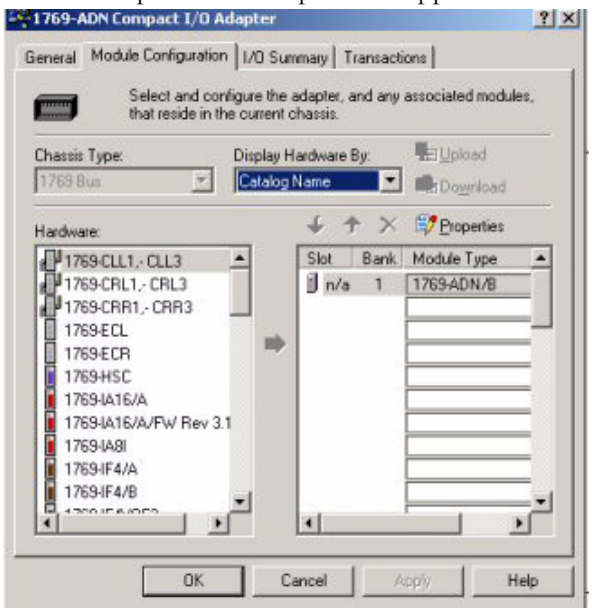

2. Select the 1769-IF4/B.

   Slot 1 appears to the right of the 1769-IF4.

3. Under the General tab, select the appropriate bank.

   Bank 1 was selected in this example.

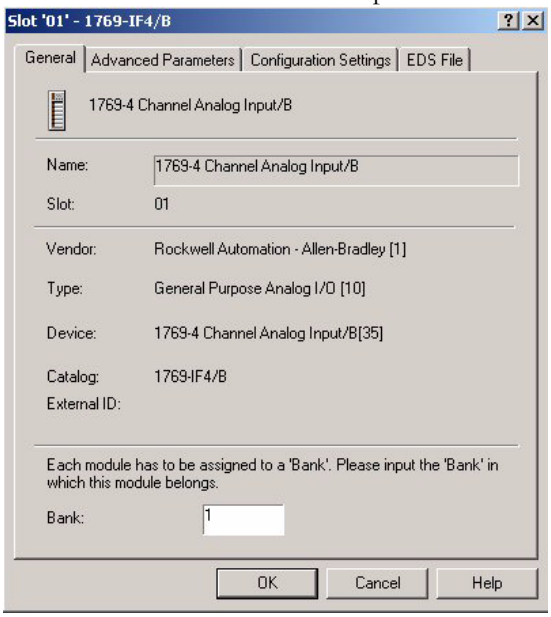

4. Double-click this slot 1 box.

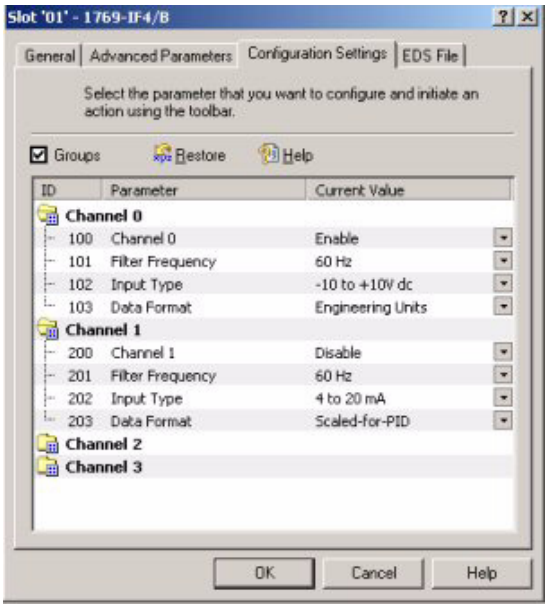

By default, the 1769-IF4 module contains six input words and no output words.

5. Click the Data Description button to see what the six input words represent.

   The first four words are the actual analog input data, while the last two words contain status and over- and under-range bits for the four channels.

6. Click OK or Cancel to exit this screen and return to the Configuration screen.

7. If your application requires only four data words and not the status information, click the Set for I/O only button

   The input size changes to four words. The revision number for the series B 1769-IF4 module is two. With this setting, you may leave the electronic keying to Exact Match. It is not recommended to disable keying, but if you are not sure of the exact revision of your module, selecting Compatible Module allows your system to operate, while still requiring a 1769-IF4 module in slot 1.

   The series B 1769-IF4 module differs from the series A module only in that it allows external 24V dc power. The external power connection allows you to draw 24V dc power for the module from your external source, should your 1769 power supply not provide enough 24V dc power for your particular set of 1769 I/O modules.

If you are using external 24V dc power for your 1769-IF4 module, you must click the white box to the left of "Using External +24v Power Source", so that a check mark appears in the box. Do not click on the box if you are not using external 24V dc power.

Each of the four analog input channels are disabled by default. To enable a channel, click its Enable box, so that a check mark appears in it. Then, choose your Filter frequency, Input Range, and Data Format for each channel. See chapter 4 of this manual for a complete description of each of these configuration categories.

1769-IF4 Example of External Power

In this example, channels 0 through 4 are used and external power is being supplied from an external 24V dc power source. In addition, channels 0 and 1 are driven by 4 to 20 mA transducers, while channels 2 and 3 are driven by devices generating 0 to 10V dc analog signals.

Throughput is not a concern for this application. However, noise immunity is. Therefore, the filter frequency for maximum noise immunity, 50 Hz, has been chosen. The analog input on channel 0 is used as the PV (input) value for a PID loop. Therefore, the Data Format for this channel is Scaled-for-PID. Channels 1 through 3 are not being used with a PID loop and have been configured for the Raw/Proportional Data Format for maximum resolution.

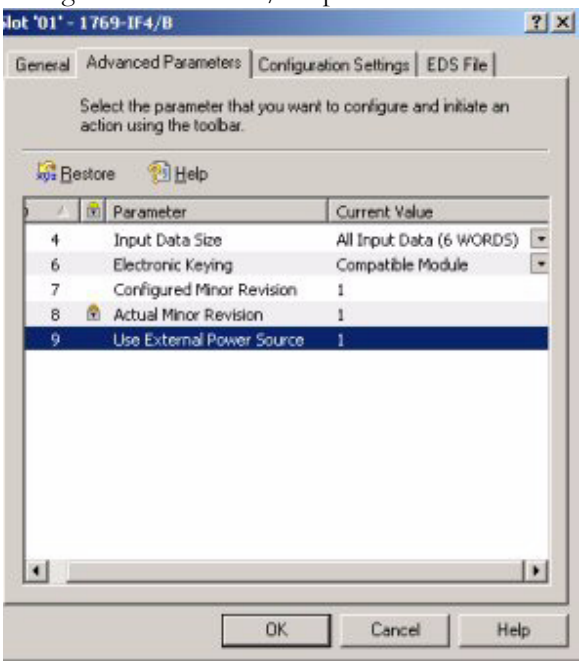

Click OK, and your configuration for the 1769-IF4 analog input module is complete.

Configure the 1769-OF8C Output Module Example

After leaving the 1769-IF4 configuration screen, the I/O Bank 1 screen for the 1769-ADN adapter should look like the following:

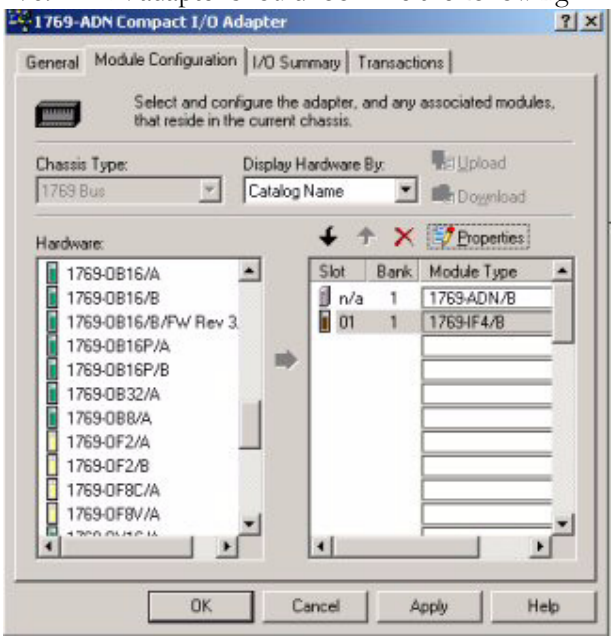

1. Just as you did for the 1769-IF4 module, click on the drop-down arrow next to the empty slot and this time choose the 1769-OF8C.

2. Click on the Slot 2 button that appears to the right of the 1769-OF8C module.

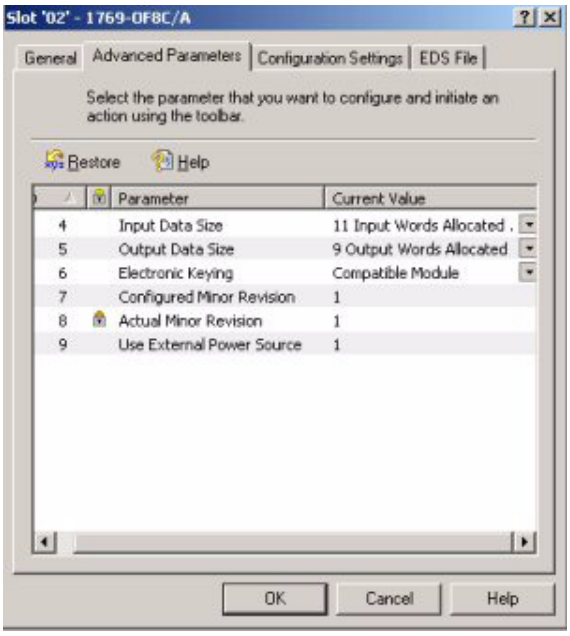

By default, the 1769-OF8C module contains eleven input words and nine output words.

3. Click on the Configuration Settings button to see what the eleven input and nine output words represent.

   The eleven input words contain channel diagnostic data for the eight channels. The nine output words contain the actual analog output data for the eight channels along with one additional word containing the control bits for unlatching alarms.

4. Click OK or Cancel to exit this screen and return to the Configuration screen.

5. Select No Input Data under Input Data Size if your application requires only the data words and not the status information.

   The Input Size changes to 0, while the Output Size remains at nine words. The Revision number for the series B 1769-OF8C module is two. With this, you may leave the Electronic Keying to Exact Match. It is not recommended to disable keying, but if you are unsure of the exact revision of your module, selecting Compatible Module allows your system to operate, while still requiring a 1769-OF8C module in slot 2.

1769-OF8C Example of External Power

The series B 1769-OF8C module differs from the series A module only in that it allows external 24V dc power. The external power connection allows you to draw 24V dc power for the module from your external source, should your 1769 power supply not provide enough 24V dc power for your particular set of 1769 I/O modules.

If you are using external 24V dc power for your 1769-OF8C module, you must click the white box to the left of “Using External +24v Power Source”, so that a check mark appears in the box. Do not click on the box if you are not using external 24V dc power.

1769-OF8C Example of Output Channels

Each of the two analog output channels are disabled by default. To enabled a channel, click its Enable box so that a check mark appears in it. Then, choose your Output Range, Data Format, and the state or your outputs should the controlling processor be placed into the program mode, fault, or lose communications.

Program State and Fault State each have two options:

- Hold Last State

  Hold last state will hold the analog output at the last value received before the processor was placed in program mode or before it faulted.

- User-defined State

  When selecting user-defined state, you must specify a value for the analog output to revert to should the processor be placed in program mode or fault. The values used for user-defined state must be valid values determined by the selected Data Format and Output Range. If communications fail, you may also choose whether your Program State or Fault State options take place for each channel.

In this example, channels 0 and 1 are enabled and configured for 4 to 20 mA Output Ranges. The Data Format for channel 0 is Scaled-for-PID, because it is the CV (output) value from your PID instruction. Hold last state was chosen for all possible conditions other than Run mode for channel 0.

Channel 1 is also enabled and configured for 4 to 20 mA Output Range. Raw/Proportional Data Format was chosen for maximum resolution. In addition, a requirement of the system is that this analog output must always be at 4 mA if the system is not in control of it.

Therefore, a value of 6241 (decimal) must be used in the event the controlling processor is placed into program mode, faults, or loses communications. The decimal number 6241 represents 4 mA, when using the Raw/Proportional Data Format.

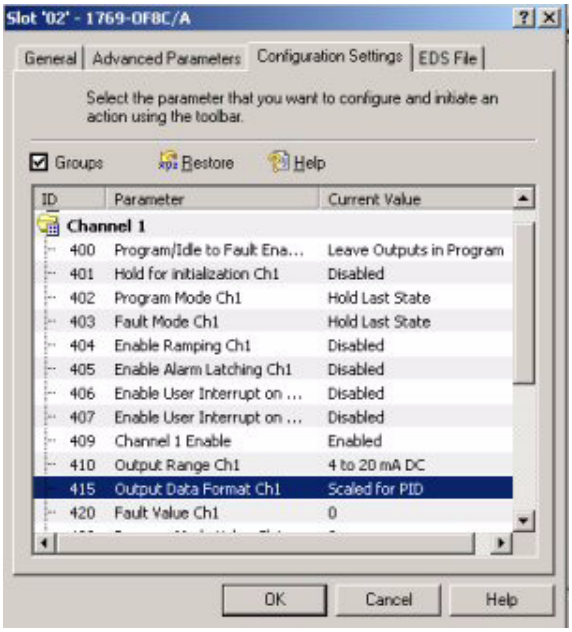

Click OK, and your configuration for the 1769-OF8C analog output module is complete.

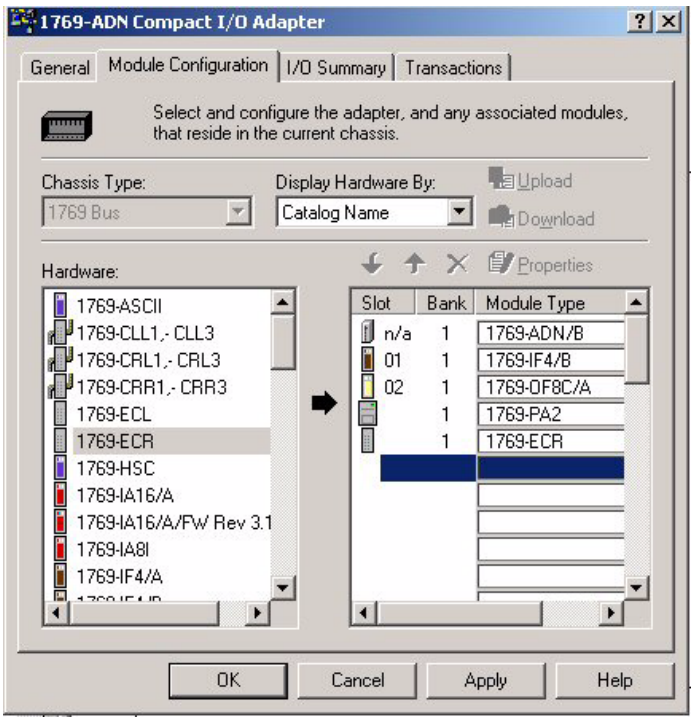

IMPORTANT Be sure to add appropriate power supplies and end caps.

Two's Complement Binary Numbers

The processor memory stores 16-bit binary numbers. Two's complement binary is used when performing mathematical calculations internal to the processor. Analog input values from the analog modules are returned to the processor in 16-bit two's complement binary format. For positive numbers, the binary notation and two's complement binary notation are identical.

As indicated in the figure on the next page, each position in the number has a decimal value, beginning at the right with 2^0 and ending at the left with 2^{15}. Each position can be 0 or 1 in the processor memory. A 0 indicates a value of 0; a 1 indicates the decimal value of the position. The equivalent decimal value of the binary number is the sum of the position values.

Positive Decimal Values

The far left position is always 0 for positive values. This limits the maximum positive decimal value to 32767 (all positions are 1 except the far left position).

Figure E.1 Positive Decimal Values

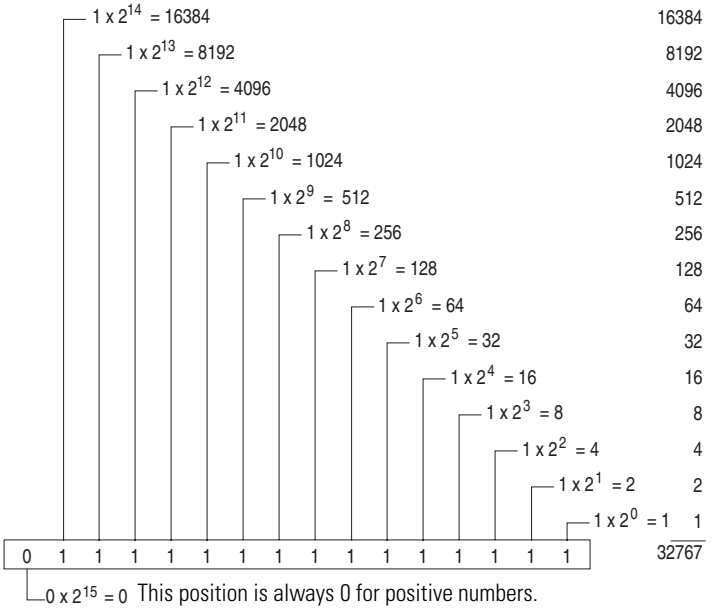

EXAMPLE

0000 1001 0000 1110 = $2^{11}+2^8+2^3+2^2+2^1$ = 2048+256+8+4+2 = 2318

0010 0011 0010 1000 = $2^{13}+2^9+2^8+2^5+2^3$ = 8192+512+256+32+8 = 9000

Negative Decimal Values

In two's complement notation, the far left position is always 1 for negative values. The equivalent decimal value of the binary number is obtained by subtracting the value of the far left position, 32768, from the sum of the values of the other positions. In Figure E.2 all positions are 1 and the value is 32767 - 32768 = -1.

Figure E.2 Negative Decimal Values

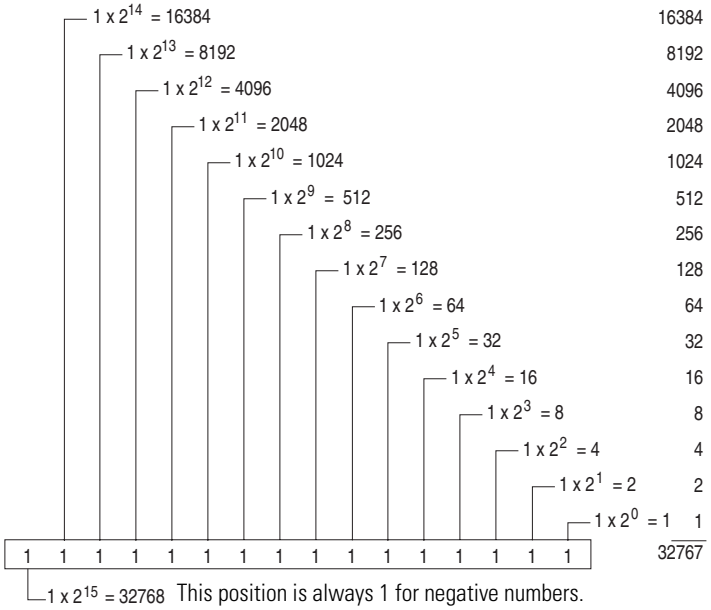

EXAMPLE

1111 1000 0010 0011 = $(2^{14}+2^{13}+2^{12}+2^{11}+2^{5}+2^{1}+2^{0}) - 2^{15}$ =
(16384+8192+4096+2048+32+2+1) - 32768 =
30755 - 32768 = -2013

The following terms and abbreviations are used throughout this manual. For definitions of terms not listed here refer to *Allen-Bradley's Industrial Automation Glossary*, Publication AG-7.1.

A/D Converter– Refers to the analog to digital converter inherent to the module. The converter produces a digital value whose magnitude is proportional to the magnitude of an analog input signal.

alternate last state – A configuration selection that instructs the module to convert a user-specified value from the channel fault or program/idle word to the output value when the module enters the fault or program mode.

analog input module – A module that contains circuits that convert analog voltage or current input signals to digital values that can be manipulated by the processor.

attenuation – The reduction in the magnitude of a signal as it passes through a system.

bus connector – A 16-pin male and female connector that provides electrical interconnection between the modules.

channel – Refers to analog input or output interfaces available on the module's terminal block. Each channel is configured for connection to a variable voltage or current input or output device, and has its own data and diagnostic status words.

channel update time – The time required for the module to sample and convert the input signals of one enabled input channel and update the channel data word.

common mode rejection – For analog inputs, the maximum level to which a common mode input voltage appears in the numerical value read by the processor, expressed in dB.

common mode rejection ratio – The ratio of a device's differential voltage gain to common mode voltage gain. Expressed in dB, CMRR is a comparative measure of a device's ability to reject interference caused by a voltage common to its input terminals relative to ground. $CMRR=20\ Log_{10\ (V1/V2)}$

common mode voltage – For analog inputs, the voltage difference between the negative terminal and analog common during normal differential operation.

common mode voltage range – For analog inputs, the largest voltage difference allowed between either the positive or negative terminal and analog common during normal differential operation.

configuration word – Contains the channel configuration information needed by the module to configure and operate each channel.

D/A Converter– Refers to the digital to analog converter inherent to the output module. The converter produces an analog dc voltage or current signal whose instantaneous magnitude is proportional to the magnitude of a digital value.

dB – (decibel) A logarithmic measure of the ratio of two signal levels.

data echo – The analog value currently being converted by the D/A converter and shown in words 2 and 3 of the output module's input data file. Under normal operating conditions, the data echo value is the same value that is being sent from the bus master to the output module.

data word – A 16-bit integer that represents the value of the analog input or output channel. The channel data word is valid only when the channel is enabled and there are no channel errors. When the channel is disabled the channel data word is cleared (0).

differential operation – The difference in voltage between a channel's positive terminal and negative terminal.

digital filter – A low-pass filter incorporated into the A/D converter. The digital filter provides very steep roll-off above it's cut-off frequency, which provides high frequency noise rejection.

filter – A device that passes a signal or range of signals and eliminates all others.

filter frequency – (-3 dB frequency) The user-selectable frequency.

full scale – The magnitude of voltage or current over which normal operation is permitted.

full scale error – (gain error) The difference in slope between the actual and ideal analog transfer functions.

full scale range – (FSR) The difference between the maximum and minimum specified analog input values.

hold last state – A configuration selection that instructs the module to keep the outputs at the last converted value prior to the condition that caused the control system to enter the fault or program mode.

input image – The input from the module to the controller. The input image contains the module data words and status bits.

LSB – (Least Significant Bit) The bit that represents the smallest value within a string of bits. For analog modules, 16-bit, two's complement binary codes are used in the I/O image in the card.

For analog inputs, the LSB is defined as the rightmost bit, bit 0, of the 16-bit field. For analog outputs, the three rightmost bits are not significant, and the LSB is defined as the third bit from the right, bit 2, of the 16-bit field.

linearity error – An analog input or output is composed of a series of voltage or current values corresponding to digital codes. For an ideal analog input or output, the values lie in a straight line spaced by a voltage or current corresponding to 1 LSB. Any deviation of the converted input or actual output from this line is the linearity error of the input or output. The linearity is expressed in percent of full scale input or output. See the variation from the straight line due to linearity error (exaggerated) in the example below.

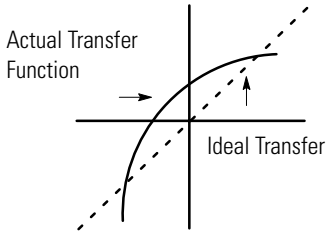

number of significant bits – The power of two that represents the total number of completely different digital codes an analog signal can be converted into or generated from.

module scan time – same as *module update time*

module update time – For input modules, the time required for the module to sample and convert the input signals of all enabled input channels and make the resulting data values available to the processor. For output modules, the time required for the module to receive the digital code from the processor, convert it to the analog output signal, and send it to the output channel.

multiplexer – An switching system that allows several signals to share a common A/D or D/A converter.

normal mode rejection – (differential mode rejection) A logarithmic measure, in dB, of a device's ability to reject noise signals between or among circuit signal conductors.

normal operating range – Input or output signals are within the configured range. See page 1-2 for a list of input and output types/ranges.

overall accuracy – The worst-case deviation of the output voltage or current from the ideal over the full output range is the overall accuracy. For inputs, the worst-case deviation of the digital representation of the input signal from the ideal over the full input range is the overall accuracy. this is expressed in percent of full scale.

Gain error, offset error, and linearity error all contribute to input and output channel accuracy.

output accuracy – The difference between the actual analog output value and what is expected, when a given digital code is applied to the d/a converter. Expressed as a ± percent of full scale. The error will include gain, offset and drift elements, and is defined at 25°C, and also over the full operating temperature range (0 to 60°C).

output image – The output from the controller to the output module. The output image contains the analog output data.

analog output module – An I/O module that contains circuits that output an analog dc voltage or current signal proportional to a digital value transferred to the module from the processor.

repeatability – The closeness of agreement among repeated measurements of the same variable under the same conditions.

resolution – The smallest detectable change in a measurement, typically expressed in engineering units (e.g. 1 mV) or as a number of bits. For example a 12-bit system has 4096 possible output states. It can therefore measure 1 part in 4096.

status word – Contains status information about the channel's current configuration and operational state. You can use this information in your ladder program to determine whether the channel data word is valid.

step response time – For inputs, this is the time required for the channel data word signal to reach a specified percentage of its expected final value, given a large step change in the input signal.

update time – see "module update time"

Numerics

1769-ADN
configuration example D-1–D-10
user manual Preface-2
-3 dB frequency 3-7, 3-24

A

A/D
converter 1-7
definition 1-1
abbreviations 1-1
alarm deadband 3-31
alarms
process alarm 3-30
analog input data 3-3, 3-18
analog input module
definition 1-1
overview 1-1
attenuation
cut-off frequency 3-7
definition 1-1

B

bus connector
definition 1-1
locking 2-6
bus interface 1-5

C

calibration 1-10
1769-IF4 A-3
1769-OF2 A-7
channel
definition 1-1
channel diagnostics 5-3
channel reconfiguration time 3-8, 3-24
channel scan time 3-8, 3-24
channel status LED 1-6
channel step response 3-6, 3-23
channel switching time 3-8, 3-24
channel update time
definition 1-1
CMRR. See common mode rejection ratio
common mode rejection 3-6, 3-23, A-3
definition 1-1
common mode rejection ratio
definition 1-1
common mode voltage
definition 1-1
common mode voltage range
definition 1-1
specification A-3
common mode voltage rating 3-6, 3-23
configuration errors 5-6
configuration word
1769-IF4 3-5, 3-22
1769-OF2 4-6
definition 1-2
contacting Rockwell Automation 5-12
current draw
1769-IF4 2-2, A-3
1769-OF2 2-2, A-3
cut-off frequency 3-7, 3-24

D

D/A converter 1-9
definition 1-2
data echo 4-4, 4-21
definition 1-2
data loopback 4-4, 4-21
See also *data echo.*
data word
definition 1-2
dB
definition 1-2
decibel. See dB.
definition of terms 1-1
DeviceNet adapter
configuration example ??–D-10
user manual publication number Preface-2
diagnostic bits 4-2, 4-20
differential mode rejection. See normal mode rejection.
differential operation
definition 1-2
digital filter 3-6, 3-23
definition 1-2
DIN rail mounting 2-8

E

electrical noise 2-4
EMC Directive 2-1
end cap terminator 2-6
error codes 5-6
error definitions 5-4

errors
configuration 5-6
critical 5-4
extended error information field 5-5
hardware 5-5
module error field 5-5
non-critical 5-4
European Union Directives 2-1
extended error codes 5-6
extended error information field 5-5
external power switch 2-10

F

fault condition
at power-up 1-6
fault mode 4-8
fault value 4-11, 4-31
filter 3-6, 3-23
definition 1-2
filter frequency 3-6, 3-23
and channel step response 3-6, 3-23
and channel update time 3-7, 3-24
definition 1-2
finger-safe terminal block 2-16
frequency
cut-off frequency 3-7, 3-24
response graphs 3-7, 3-24
FSR. See full scale range.
full scale
definition 1-2
full scale error
definition 1-2
full scale range
1769-IF4 specifications A-3
1769-OF2 specifications A-7
definition 1-2

G

gain error. See full scale error.
generic profile
configuration example C-1
grounding 2-10

H

hardware errors 5-5
heat considerations 2-4
hold last state
bits 4-2, 4-21
definition 1-2
fault mode 4-8
program/idle mode 4-9, 4-29, 4-30

I

inhibit function 5-12
input data file 4-2, 4-19
input data formats
engineering units 3-10, 3-28
percent range 3-10, 3-28
raw/proportional data 3-10, 3-27
scaled for PID 3-10, 3-28
valid formats/ranges 3-11, 3-28
input filter selection 3-6, 3-23
input image
definition 1-2
input module
channel configuration 3-5, 3-22
enable channel 3-6, 3-23
input module status
general status bits 3-3, 3-18
over-range flag bits 3-3, 3-19
under-range flag bits 3-3, 3-19
input type/range selection 3-9, 3-27
installation 2-1–2-9
grounding 2-10
heat and noise considerations 2-4

L

least significant bit. See LSB.

M

module error field 5-5
module inhibit function 5-12
module scan time
definition 1-3
module update time 3-8, 3-24
definition 1-3
examples 3-9, 3-26
mounting 2-6–2-8
multiplexer
definition 1-3
multiplexing 1-7

N

negative decimal values E-2
noise rejection 3-6, 3-23
normal mode rejection
definition 1-3
ratio A-3
number of significant bits
definition 1-3

O

open-circuit detection 3-3, 3-19, 5-3
operation
system 1-6
out-of-range detection 5-3
over-range flag bits 3-3, 3-19, 4-3, 4-20
under-range flag bits 3-3, 3-19, 4-3, 4-20
output data file 4-2, 4-18
output data formats
engineering units 4-7
percent full range 4-8
raw/proportional data 4-7
scaled for PID 4-7
valid formats/ranges 4-12, 4-33, 4-34
output image
definition 1-4
output module
channel configuration 4-6, 4-24
configuration data file 4-5, 4-22
enable channel 4-7, 4-25
output module status
diagnostic bits 4-2, 4-20
general status bits 4-3, 4-19
hold last state bits 4-2, 4-21
over-range flag bits 4-3, 4-20
under-range flag bits 4-3, 4-20
output range selection 4-8
overall accuracy
definition 1-4
over-range flag bits 3-3, 3-19, 4-3, 4-20

P

panel mounting 2-7–2-8
positive decimal values E-1
power-up diagnostics 5-3
power-up sequence 1-6
process alarms
1769-IF8 modules 3-30
program alteration 5-2
program/idle mode 4-9, 4-29, 4-30
program/idle to fault enable 4-10, 4-31
program/idle value 4-11, 4-32

R

reconfiguration time 3-8, 3-24
removing terminal block 2-15
replacing a module 2-9
resolution
definition 1-4
input channel 3-13
output channel 4-15
RSLogix 500
configuration example B-1–??
RSLogix 5000
configuration example C-1–??
RSNetworx
configuration example ??–D-10

S

safety circuits 5-2
scan time 3-8, 3-24, 1-3
spacing 2-6
specifications A-1
input
1769-IF8 A-5
output
1769-OF8C A-9
1769-OF8V A-11
status word
definition 1-4
step response 3-6, 3-23
step response time
definition 1-4
switching time 3-8, 3-24
system operation 1-6

T

terminal block
removing 2-15
wiring 2-16
terminal door label 2-18
terminal screw torque 2-16
troubleshooting
safety considerations 5-1
two's complement binary numbers E-1

U

under-range flag bits 3-3, 3-19, 4-3, 4-20
update time. See channel update time.
update time. See module update time.

W

wire size 2-16
wiring 2-1
differential inputs 2-19
input module 2-19–2-21
input terminal layout 2-19
mixed transmitter type 2-21
module 2-16
modules 2-17
ouput terminal layout 2-24
output module 2-24
routing considerations 2-4
single-ended sensor/transmitter types 2-20
terminal block 2-16

How Are We Doing?

Your comments on our technical publications will help us serve you better in the future.
Thank you for taking the time to provide us feedback.

You can complete this form and mail (or fax) it back to us or email us at
RADocumentComments@ra.rockwell.com

Pub. Title/Type Compact I/O Analog Modules

Cat. No. 1769-IF4, -IF8, -OF2, -OF8C, and -OF8V Pub. No. 1769-UM002B-EN-P Pub. Date July 2005 Part No.

Please complete the sections below. Where applicable, rank the feature (1=needs improvement, 2=satisfactory, and 3=outstanding).

Overall Usefulness	1 2 3	How can we make this publication more useful for you?
Completeness (all necessary information is provided)	1 2 3	Can we add more information to help you? procedure/step illustration feature example guideline other explanation definition
Technical Accuracy (all provided information is correct)	1 2 3	Can we be more accurate? text illustration
Clarity (all provided information is easy to understand)	1 2 3	How can we make things clearer?
Other Comments		You can add additional comments on the back of this form.

Your Name

Your Title/Function

Location/Phone

Would you like us to contact you regarding your comments?

____No, there is no need to contact me

____Yes, please call me

____Yes, please email me at _____

____Yes, please contact me via _____

Return this form to: Rockwell Automation Technical Communications, 1 Allen-Bradley Dr., Mayfield Hts., OH 44124-9705

Fax: 440-646-3525 Email: RADocumentComments@ra.rockwell.com

PLEASE FASTEN HERE (DO NOT STAPLE)

Other Comments

PLEASE FOLD HERE

PLEASE REMOVE

NO POSTAGE
NECESSARY
IF MAILED
IN THE
UNITED STATES

BUSINESS REPLY MAIL

FIRST-CLASS MAIL PERMIT NO. 18235 CLEVELAND OH

POSTAGE WILL BE PAID BY THE ADDRESSEE

Rockwell Automation

1 ALLEN-BRADLEY DR
MAYFIELD HEIGHTS OH 44124-9705

www.rockwellautomation.com

Power, Control and Information Solutions Headquarters

Americas: Rockwell Automation, 1201 South Second Street, Milwaukee, WI 53204-2496 USA, Tel: (1) 414.382.2000, Fax: (1) 414.382.4444
Europe/Middle East/Africa: Rockwell Automation, Vorstlaan/Boulevard du Souverain 36, 1170 Brussels, Belgium, Tel: (32) 2 663 0600, Fax: (32) 2 663 0640
Asia Pacific: Rockwell Automation, Level 14, Core F, Cyberport 3, 100 Cyberport Road, Hong Kong, Tel: (852) 2887 4788, Fax: (852) 2508 1846

Publication 1769-UM002B-EN-P - July 2005
Supersedes Publication 1769-UM002A-EN-P - October 2000

Copyright © 2005 Rockwell Automation, Inc. All rights reserved. Printed in the U.S.A.

THIS PAGE WAS INTENTIONALLY LEFT BLANK

THIS PAGE WAS INTENTIONALLY LEFT BLANK

Installation Instructions

Compact™ Individually Isolated AC/DC Relay Output Module

(Catalog Number 1769-OW8I, Series B)

Inside

Module Description 2
Module Installation 3
System Assembly 4
Mounting Expansion I/O 5
Replacing a Single Module within a System 7
Field Wiring Connections 8
I/O Memory Mapping 11
1769-OW8I Configuration File 12
Spare/Replacement Module Parts 13
Specifications 14
Hazardous Location Considerations 17
Environnements dangereux 17
For More Information 18

Publication 1769-IN053A-EN-P - April 2001

Module Description

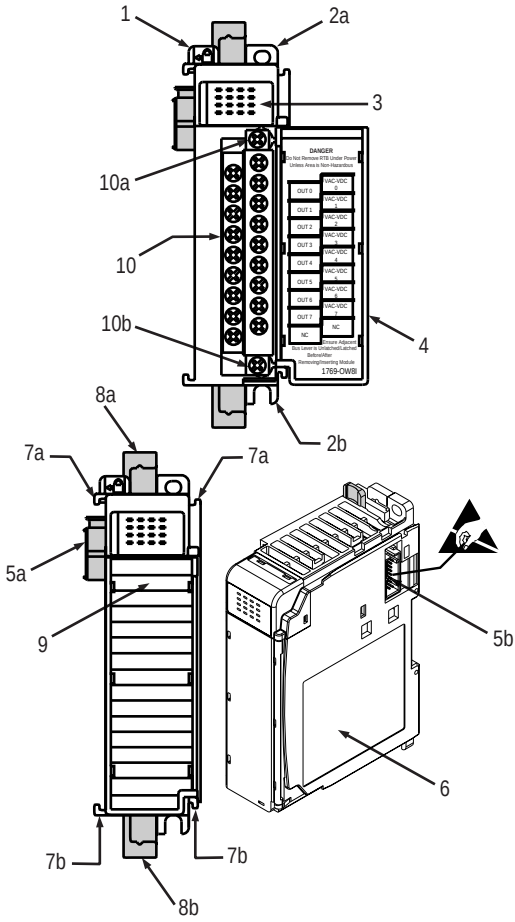

Item	Description
1	bus lever (with locking function)
2a	upper panel mounting tab
2b	lower panel mounting tab
3	I/O diagnostic LEDs
4	module door with terminal identification label
5a	movable bus connector with female pins
5b	stationary bus connector with male pins
6	nameplate label
7a	upper tongue-and-groove slots
7b	lower tongue-and-groove slots
8a	upper DIN rail latch
8b	lower DIN rail latch
9	write-on label (user ID tag)
10	removable terminal block (RTB) with finger-safe cover
10a	RTB upper retaining screw
10b	RTB lower retaining screw

Module Installation

Compact I/O is suitable for use in an industrial environment when installed in accordance with these instructions. Specifically, this equipment is intended for use in clean, dry environments (Pollution degree 2[1]) and to circuits not exceeding Over Voltage Category II[2] (IEC 60664-1).[3]

Prevent Electrostatic Discharge

ATTENTION

Electrostatic discharge can damage integrated circuits or semiconductors if you touch bus connector pins. Follow these guidelines when you handle the module:

- Touch a grounded object to discharge static potential.
- Wear an approved wrist-strap grounding device.
- Do not touch the bus connector or connector pins.
- Do not touch circuit components inside the module.
- If available, use a static-safe work station.
- When not in use, keep the module in its static-shield box.

Remove Power

ATTENTION

Remove power before removing or inserting this module. When you remove or insert a module with power applied, an electrical arc may occur. An electrical arc can cause personal injury or property damage by:

- sending an erroneous signal to your system's field devices, causing unintended machine motion
- causing an explosion in a hazardous environment

Electrical arcing causes excessive wear to contacts on both the module and its mating connector. Worn contacts may create electrical resistance.

(1) Pollution Degree 2 is an environment where, normally, only non-conductive pollution occurs except that occasionally a temporary conductivity caused by condensation shall be expected.
(2) Over Voltage Category II is the load level section of the electrical distribution system. At this level transient voltages are controlled and do not exceed the impulse voltage capability of the product's insulation.
(3) Pollution Degree 2 and Over Voltage Category II are International Electrotechnical Commission (IEC) designations.

System Assembly

The module can be attached to the controller or an adjacent I/O module *before* or *after* mounting. For mounting instructions, see "Panel Mounting" on page 6, or "DIN Rail Mounting" on page 7. To work with a system that is already mounted, see "Replacing a Single Module within a System" on page 7.

The following procedure shows you how to assemble the Compact I/O system.

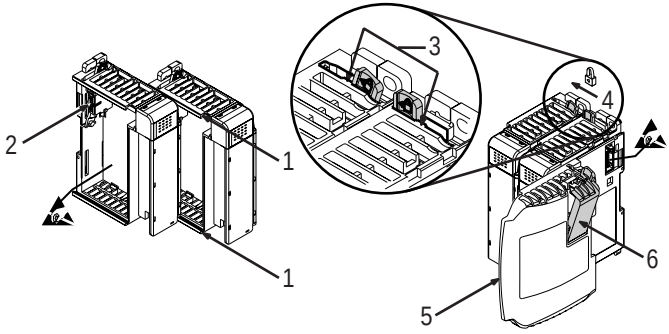

1. Disconnect power.
2. Check that the bus lever of the module to be installed is in the unlocked (fully right) position.
3. Use the upper and lower tongue-and-groove slots (1) to secure the modules together (or to a controller).
4. Move the module back along the tongue-and-groove slots until the bus connectors (2) line up with each other.
5. Push the bus lever back slightly to clear the bus locking tab (3). Use your fingers or a small screwdriver.

6. To allow communication between the controller and module, move the bus lever fully to the left (4) until it clicks. Ensure it locks firmly into the bus locking tab.

ATTENTION

When attaching I/O modules, it is very important that the bus connectors are securely locked together to ensure proper electrical connection.

7. Attach an end cap terminator (5) to the last module in the system by using the tongue-and-groove slots as before.

8. Lock the end cap bus terminator (6).

IMPORTANT

A 1769-ECR or 1769-ECL right or left end cap must be used to terminate the end of the serial communication bus.

Mounting Expansion I/O

ATTENTION

During panel or DIN rail mounting of all devices, be sure that all debris (metal chips, wire strands, etc.) is kept from falling into the module. Debris that falls into the module could cause damage on power up.

Minimum Spacing

Maintain spacing from enclosure walls, wireways, adjacent equipment, etc. Allow 50 mm (2 in.) of space on all sides for adequate ventilation, as shown:

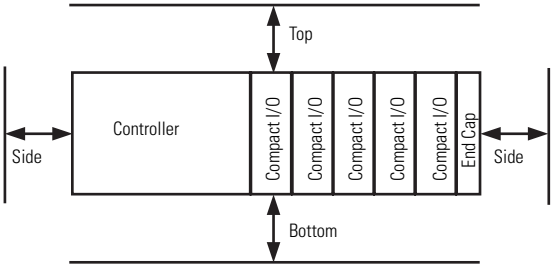

Panel Mounting

Mount the module to a panel using two screws per module. Use M4 or #8 panhead screws. Mounting screws are required on every module.

Panel Mounting Using the Dimensional Template

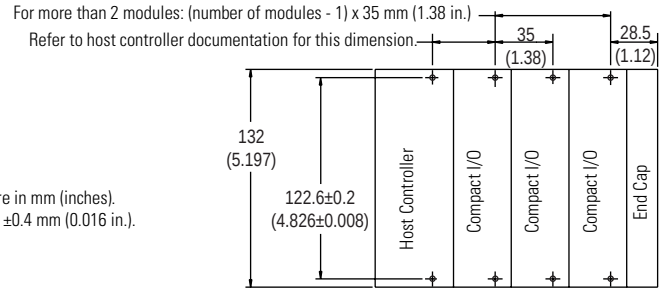

Note: All dimensions are in mm (inches).
Hole spacing tolerance: ±0.4 mm (0.016 in.).

Panel Mounting Procedure Using Modules as a Template

The following procedure allows you to use the assembled modules as a template for drilling holes in the panel. If you have sophisticated panel mounting equipment, you can use the dimensional template provided on page 6. Due to module mounting hole tolerance, it is important to follow these procedures:

1. On a clean work surface, assemble no more than three modules.
2. Using the assembled modules as a template, carefully mark the center of all module-mounting holes on the panel.
3. Return the assembled modules to the clean work surface, including any previously mounted modules.
4. Drill and tap the mounting holes for the recommended M4 or #8 screw.
5. Place the modules back on the panel, and check for proper hole alignment.
6. Attach the modules to the panel using the mounting screws.

TIP

If mounting more modules, mount only the last one of this group and put the others aside. This reduces remounting time during drilling and tapping of the next group.

7. Repeat steps 1 to 6 for any remaining modules.

DIN Rail Mounting

The module can be mounted using the following DIN rails: 35 x 7.5 mm (EN 50 022 - 35 x 7.5) or 35 x 15 mm (EN 50 022 - 35 x 15).

Before mounting the module on a DIN rail, close the DIN rail latches. Press the DIN rail mounting area of the module against the DIN rail. The latches will momentarily open and lock into place.

Replacing a Single Module within a System

The module can be replaced while the system is mounted to a panel (or DIN rail). Follow these steps in order:

1. Remove power. See important note on page 3.
2. On the module to be removed, remove the upper and lower mounting screws from the module (or open the DIN latches using a flat-blade or phillips style screwdriver).
3. Move the bus lever to the right to disconnect (unlock) the bus.
4. On the right-side adjacent module, move its bus lever to the right (unlock) to disconnect it from the module to be removed.
5. Gently slide the disconnected module forward. If you feel excessive resistance, check that the module has been disconnected from the bus, and that both mounting screws have been removed (or DIN latches opened).

TIP

It may be necessary to rock the module slightly from front to back to remove it, or, in a panel-mounted system, to loosen the screws of adjacent modules.

6. Before installing the replacement module, be sure that the bus lever on the module to be installed, and on the right-side adjacent module are in the unlocked (fully right) position.
7. Slide the replacement module into the open slot.
8. Connect the modules together by locking (fully left) the bus levers on the replacement module and the right-side adjacent module.
9. Replace the mounting screws (or snap the module onto the DIN rail).

Field Wiring Connections

Grounding the Module

This product is intended to be mounted to a well-grounded mounting surface such as a metal panel. Additional grounding connections from the module's mounting tabs or DIN rail (if used), are not required unless the mounting surface cannot be grounded. Refer to *Industrial Automation Wiring and Grounding Guidelines*, Allen-Bradley publication 1770-4.1, for additional information.

Output Wiring

Basic wiring(1) of output devices to the 1769-OW8I is shown below.

ATTENTION

Be careful when stripping wires. Wire fragments that fall into a module could cause damage at power up. Once wiring is complete, ensure the module is free of all metal fragments.

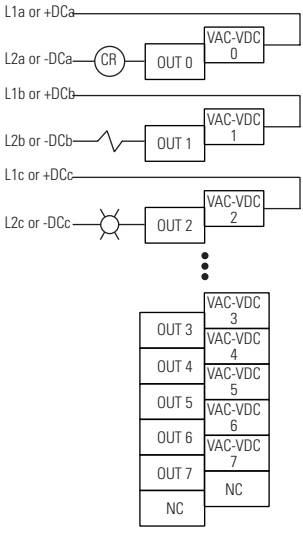

(1) **Surge Suppression** - Connecting surge suppressors across your external inductive load will extend the life of the relay contacts. For additional details, refer to Industrial Automation Wiring and Grounding Guidelines, Allen-Bradley publication 1770-4.1.

A removable, write-on label is provided with the module. Remove the label from the door, mark the identification of each terminal with permanent ink, and slide the label back into the door. Your markings (ID tag) will be visible when the module door is closed.

Removing the Finger-Safe Terminal Block

When wiring field devices to the module, it is not necessary to remove the terminal block. If you remove the terminal block, use the write-on label on the side of the terminal block to identify the module slot lcation and type.

To remove the terminal block, loosen the upper and lower retaining screws. The terminal block will back away from the module as you remove the screws. When replacing the terminal block, torque the retaining screws to 0.46 Nm (4.1 in-lbs).

Wiring the Finger-Safe Terminal Block

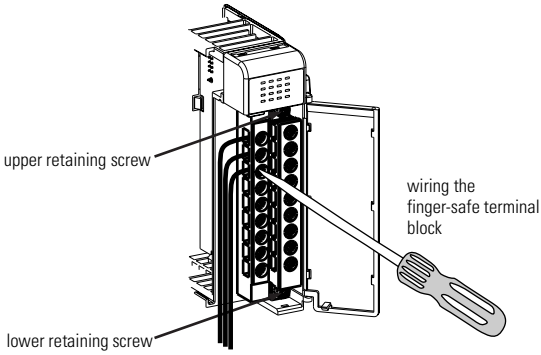

When wiring the terminal block, keep the finger-safe cover in place.

1. Loosen the terminal screws to be wired.

2. Route the wire under the terminal pressure plate. You can use the bare wire or a spade lug. The terminals will accept a 6.35 mm (0.25 in.) spade lug.

TIP

The terminal screws are non-captive. Therefore, it is possible to use a ring lug [maximum 1/4 inch o.d. with a 0.139 inch minimum i.d. (M3.5)] with the module.

3. Tighten the terminal screw making sure the pressure plate secures the wire. Recommended torque when tightening terminal screws is 0.68 Nm (6 in-lbs).

TIP

If you need to remove the finger-safe cover, insert a screwdriver into one of the square, wiring holes and gently pry the cover off. If you wire the terminal block with the finger-safe cover removed, you will not be able to put it back on the terminal block because the wires will be in the way.

Simplified Output Circuit Diagram

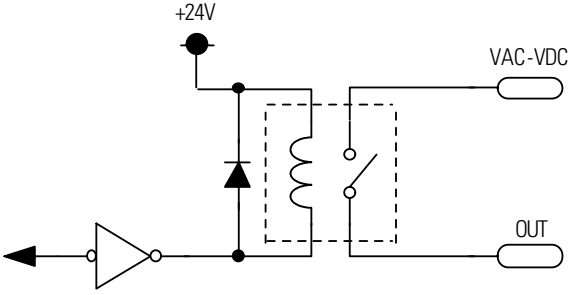

Wire Size and Terminal Screw Torque

Each terminal accepts up to two wires with the following restrictions:

Wire Type		Wire Size	Terminal Screw Torque	Retaining Screw Torque
Solid	Cu-90°C (194°F)	#14 to #22 AWG	0.68 Nm (6 in-lbs)	0.46 Nm (4.1 in-lbs)
Stranded	Cu-90°C (194°F)	#16 to #22 AWG	0.68 Nm (6 in-lbs)	0.46 Nm (4.1 in-lbs)

I/O Memory Mapping

Output Data File

For each module, slot x, word 0 in the output data file contains the control program's directed state of the discrete output points. For the 1769-OW8I, bits 8 to 15 are not used.

Word	Bit Position															
	15	14	13	12	11	10	9	8	7	6	5	4	3	2	1	0
0	0	0	0	0	0	0	0	0	w	w	w	w	w	w	w	w

w = write

Output Module's Input Data File

For each module, slot x, input data file word 0 contains the state of the module's output data (output data echo) file word 0. During normal operation, these input bits represent the logic state that the outputs are directed to by the control program. They are also dependent upon the:

- Program Mode configuration (if supported by the controller)
- The Fault Mode configuration (if supported by the controller)

For the 1769-OW8I, bits 8 to 15 are not used.

Word	Bit Position															
	15	14	13	12	11	10	9	8	7	6	5	4	3	2	1	0
0	0	0	0	0	0	0	0	0	r	r	r	r	r	r	r	r

r = read

IMPORTANT

The output module's input data file reflects the output data echo of the module, not the electrical state of the output terminals. It does not reflect shorted or open outputs.

It is important to use this input word if the controller adapter supports the Program Mode or Fault Mode function, and if it is configured to use them.

1769-OW8I Configuration File

The read/writable configuration data file allows the setup of the hold last state and user-defined safe state conditions.

The manipulation of the bits from this file is normally done with programming software (e.g. RSLogix 500, RSNetworx for DeviceNet, etc.) during initial configuration of the system. In that case, graphical screens are provided via the programmer to simplify configuration. However, some systems (e.g. 1769-ADN DeviceNet Adapter) also allow the bits to be altered as part of the control program using communication rungs. In that case, it is necessary to understand the bit arrangment.

Word	Bit Position															
	15	14	13	12	11	10	9	8	7	6	5	4	3	2	1	0
0	0	0	0	0	0	0	0	0	0	0	0	0	0	0	0	PFE
1	Program State for Output Array Word 0															
2	Program Value for Output Array Word 0															
3	Fault State for Output Array Word 0															
4	Fault Value for Output Array Word 0															

Program State Word

Word 1, the program state word, selects the hold last state or user-defined safe state condition for each individual output on a system transition from Run to Program.

Condition	Bit Setting
User-defined Safe State	0
Hold Last State	1

Program Value Word

The program value word, word 2, is used to program the user-defined safe state value (0=Off, 1=On). Each output is individually configurable for on or off.

Value	Bit Setting
Off	0
On	1

Fault State Word

Word 3, the fault state word, selects the hold last state or user-defined safe state condition for each individual output on a system transition from Run to Fault.

Condition	Bit Setting
User-defined Safe State	0
Hold Last State	1

Fault Value Word

The fault value word, word 4, is used to program the fault state value (0=Off, 1=On). Each output is individually configurable for on or off.

Value	Bit Setting
Off	0
On	1

Program to Fault Enable Bit (PFE)

Word 0, bit 0, allows the selection of which data value, the program or fault value, to apply to the output if a system in Program mode undergoes a system fault, resulting a change to Fault mode.

Value Applied	Bit Setting
Program	0
Fault	1

Module Default Condition

The modules default condition is all zeros, programming the conditions shown below.

Word or Bit Affected		Condition Applied
Word 0, Bit 0:	Program-to-Fault Enable	Program Value
Word 1:	Program State	User-defined Safe State
Word 2:	Program Value	Off
Word 3:	Fault State	User-defined Safe State
Word 4:	Fault Value	Off

Spare/Replacement Module Parts

- Terminal Block: 1769-RTBN18 (1 per kit)
- Door Label: 1769-RL1 (2 per kit)
- Door: 1769-RD (2 per kit)

Specifications

General Specifications

Specification	Value
Dimensions	118 mm (height) x 87 mm (depth) x 35 mm (width) height including mounting tabs is 138 mm 4.65 in. (height) x 3.43 in (depth) x 1.38 in (width) height including mounting tabs is 5.43 in.
Approximate Shipping Weight (with carton)	290g (0.64 lbs.)
Storage Temperature	-40°C to +85°C (-40°F to +185°F)
Operating Temperature	0°C to +60°C (32°F to +140°F)
Operating Humidity	5% to 95% non-condensing
Operating Altitude	2000 meters (6561 feet)(1)
Vibration	Operating: 10 to 500 Hz, 5G, 0.030 inches maximum peak-to-peak Relay Operation: 2G
Shock	Operating: 30G panel mounted (20G DIN rail mounted) Relay Operation: 7.5G panel mounted (5G DIN rail mounted) Non-Operating: 40G panel mounted (30G DIN rail mounted)
Agency Certification	• C-UL certified (under CSA C22.2 No. 142) • UL 508 listed • CE and C-Tick compliant for all applicable directives
Hazardous Environment Class	Class I, Division 2, Hazardous Location, Groups A, B, C, D (UL 1604, C-UL under CSA C22.2 No. 213)
Radiated and Conducted Emissions	EN50081-2 Class A
Electrical /EMC:	*The module has passed testing at the following levels:*
ESD Immunity (IEC61000-4-2)	• 4kV contact, 8kV air, 4kV indirect
Radiated Immunity (IEC61000-4-3)	• 10 V/m, 80 to 1000 MHz, 80% amplitude modulation, +900 MHz keyed carrier
Fast Transient Burst (IEC61000-4-4)	• 2 kV, 5 kHz
Surge Immunity (IEC61000-4-5)	• 2 kV common mode, 1 kV differential mode
Conducted Immunity (IEC61000-4-6)	• 10V, 0.15 to 80 MHz(2)

(1) For operation above 2000 meters, consult the factory.
(2) Conducted Immunity frequency range may be 150 kHz to 30 MHz if the Radiated Immunity frequency range is 30 MHz to 1000 MHz.

Output Specifications

Specification	1769-OW8I
Voltage Category	AC/DC normally open relay
Operating Voltage Range	5 to 265V ac 5 to 125V dc
Number of Outputs	8
Isolated Groups	8 individually isolated outputs
Bus Current Draw (max.)	125 mA at 5V dc (0.625W) 100 mA at 24V dc (2.4W)
Heat Dissipation	2.83 Total Watts *(The Watts per point, plus the minimum Watts, with all points energized.)*
Signal Delay (max.) – resistive load	turn-on = 10 ms turn-off = 10 ms
Off-State Leakage (max.)	0 mA
On-State Current (min.)	10 mA at 5V dc
Continuous Current per Point (max.)	2.5A (Also see "Relay Contact Ratings" on page 16.)
Continuous Current per Common (max.)	2.5A
Continuous Current per Module (max.)	16A
Power Supply Distance Rating	8 (The module may not be more than 8 modules away from the power supply.)
Output Point to Bus Isolation	Verified by one of the following dielectric tests: 1836V ac for 1 sec. or 2596V dc for 1 sec. 265V ac working voltage (IEC Class 2 reinforced insulation)
Isolated Groups	8: Each point individually isolated from the other.
Group to Group Isolation	Verified by one of the following dielectric tests: 1836V ac for 1 sec. or 2596V dc for 1 sec. 265V ac working voltage (basic insulation) 150V ac working voltage (IEC Class 2 reinforced insulation)
Vendor I.D. Code	1
Product Type Code	7
Product Code	87

Relay Contact Ratings

Volts (max.)	Continuous Amps per Point (max.)	Amperes(1)		Voltamperes		NEMA ICS 2-125
		Make	Break	Make	Break	
240V ac	2.5A	7.5A	0.75A	1800 VA	180 VA	C300
120V ac		15A	1.5A			
125V dc	1.0A	0.22A(2)		28 VA		R150
24V dc	2.0A	1.2A(2)		28 VA		—

(1) **Surge Suppression** - Connecting surge suppressors across your external inductive load will extend the life of the relay contacts. For additional details, refer to Industrial Automation Wiring and Grounding Guidelines, Allen-Bradley publication 1770-4.1.

(2) For dc voltage applications, the make/break ampere rating for relay contacts can be determined by dividing 28 VA by the applied dc voltage. For example, 28 VA/48V dc = 0.58A. For dc voltage applications less than 48V, the make/break ratings for relay contacts cannot exceed 2A.

Hazardous Location Considerations

This equipment is suitable for use in Class I, Division 2, Groups A, B, C, D or non-hazardous locations only. The following WARNING statement applies to use in hazardous locations.

WARNING

EXPLOSION HAZARD

- Substitution of components may impair suitability for Class I, Division 2.
- Do not replace components or disconnect equipment unless power has been switched off or the area is known to be non-hazardous.
- Do not connect or disconnect components unless power has been switched off or the area is known to be non-hazardous.
- This product must be installed in an enclosure.
- All wiring must comply with N.E.C. article 501-4(b).

Environnements dangereux

Cet équipement est conçu pour être utilisé dans des environnements de Classe 1, Division 2, Groupes A, B, C, D ou non dangereux. La mise en garde suivante s'applique à une utilisation dans des environnements dangereux.

AVERTISSEMENT

DANGER D'EXPLOSION

- La substitution de composants peut rendre cet équipement impropre à une utilisation en environnement de Classe 1, Division 2.
- Ne pas remplacer de composants ou déconnecter l'équipement sans s'être assuré que l'alimentation est coupée et que l'environnement est classé non dangereux.
- Ne pas connecter ou déconnecter des composants sans s'être assuré que l'alimentation est coupée ou que l'environnement est classé non dangereux.
- Ce produit doit être installé dans une armoire. .

For More Information

For	Refer to this Document	Pub. No.
A more detailed description of how to install and use your Compact™ I/O with MicroLogix™ 1200 & 1500 programmable controller.	MicroLogix 1200 & 1500 Programmable Controllers User Manual	1764-UM001B-US-P
A more detailed description of how to install and use your Compact I/O with the 1769-ADN DeviceNet Adapter.	1769-ADN DeviceNet Adapter User Manual	1769-UM001A-US-P
A more detailed description of how to install and use your Compact I/O with the CompactLogix™ System.	CompactLogix System User Manual	1769-UM007C-EN-P
More information on proper wiring and grounding techniques.	Industrial Automation Wiring and Grounding Guidelines	1770-4.1

If you would like a manual, you can:

- download a free electronic version from the internet: **www.ab.com/micrologix** or **www.theautomationbookstore.com**
- purchase a printed manual by:
  - contacting your local distributor or Rockwell Automation representative
  - visiting **www.theautomationbookstore.com** and placing your order
  - calling 1.800.963.9548 (USA/Canada) or 001.330.725.1574 (Outside USA/Canada)

Compact, MicroLogix, CompactLogix, RSLogix and RSNetworx are trademarks of Rockwell Automation.
DeviceNet is a trademark of Open DeviceNet Vendor Association (ODVA).

Reach us now at www.rockwellautomation.com

Wherever you need us, Rockwell Automation brings together leading brands in industrial automation including Allen-Bradley controls, Reliance Electric power transmission products, Dodge mechanical power transmission components, and Rockwell Software. Rockwell Automation's unique, flexible approach to helping customers achieve a competitive advantage is supported by thousands of authorized partners, distributors and system integrators around the world.

Americas Headquarters, 1201 South Second Street, Milwaukee, WI 53201-2496, USA, Tel: (1) 414 382-2000, Fax: (1) 414-382-4444
European Headquarters SA/NV, Boulevard du Souverain 36, 1170 Brussels, Belgium, Tel: (32) 2 663 0600, Fax: (32) 2 663 0640
Asia Pacific Headquarters, 27/F Citicorp Centre, 18 Whitfield Road, Causeway Bay, Hong Kong, Tel: (852) 2887 4788, Fax: (852) 2508 1846

Rockwell Automation

Publication 1769-IN053A-EN-P - April 2001
Supersedes Publication 1769-IN005C-EN-P - June 2000

PN 40072-116-01 (A)

© 2001 Rockwell International Corporation. Printed in the U.S.A.

THIS PAGE WAS INTENTIONALLY LEFT BLANK

THIS PAGE WAS INTENTIONALLY LEFT BLANK

1606-XLS480E & 1606-XLS240EC 24V, 20A; Single Phase Input

1606-XLS480E
&
1606-XLS480EC

24V,20A Single Phase Input

POWER SUPPLY

- Ultra-small size
- Extra-low inrush current
- Active power factor correction
- Wide range AC/DC input; auto select input
- Superior reserve power (can support 150% rated power for five seconds)
- Superior efficiency and temperature rating
- DC-OK and overload LED

1. GENERAL DESCRIPTION

The most outstanding features of this 1606-XLS power supply are the high efficiency and the small size, which are achieved by a synchronous rectification and further novel design details.

With short-term power capability of 150% and built-in large sized output capacitors, these features help start motors, charge capacitors and absorb reverse energy. A wide range input voltage design and a negligible low input inrush current make installation and usage simple. Diagnostics are easy due to the DC-ok relay, a green DC-ok and a red overload LED.

Unique quick-connect spring-clamp terminals allow a safe and fast installation. Many global approvals make this unit suitable for nearly every situation.

2. SPECIFICATION QUICK REFERENCE

Output voltage	DC 24V	
Adjustment range	24-28V	
Output current	20A	continuous, 24V
	30A	for typ. 4s, 24V
Output power	480W	continuous, 24V
	720W	for typ. 4s, 24V
Output ripple	< 100mVpp	20Hz to 20MHz
Input voltage	AC 100-240V	±15%
Line frequency	50-60Hz	±6%
AC Input current	4.56 / 2.48A	at 120 / 230Vac
Power factor	0.95 / 0.90	at 120 / 230Vac
AC Inrush current	typ. 9 / 7A peak	at 120 / 230Vac
DC Input voltage	DC 110-300V	-20%/+25%
DC Input current	4.7 / 1.7A	at 110 / 300Vdc
Efficiency	92.4 / 93.9%	at 120 / 230Vac
Losses	39.6 / 31.4W	at 120 / 230Vac
Temperature range	-25°C to +70°C	operational
Derating	12W/°C	+60 to +70°C
Hold-up time	typ. 32 / 51ms	at 120 / 230Vac
Dimensions	82x124x127mm	WxHxD

3. AGENCY APPROVALS

18WM LISTED IND. CONT. EQ. UL 508	UL 60950-1
Class I Div 2	182790
	N223
EMC, LVD	

4. RELATED PRODUCTS

1606-XLB	Wall mount bracket
1606-XLSRED	Redundancy Module
1606-XLBUFFER	Buffer unit

1606-XLS480E & 1606-XLS240EC 24V, 20A; Single Phase Input

INDEX PAGE

1. General Description 1
2. Specification Quick reference 1
3. Agency Approvals 1
4. Related Products 1
5. AC-Input 3
6. Input Inrush Current 4
7. DC-Input 4
8. Output 5
9. Hold-up Time 7
10. DC-OK Relay Contact 7
11. Efficiency and Power Losses 8
12. Functional Diagram 9
13. Product Face label 9
14. Terminals and Wiring 10
15. Reliability 10
16. EMC 11
17. Environment 12
18. Protection Features 13
19. Safety 13
20. Dielectric Strength 13
21. Approvals 14

INDEX PAGE

22. Fulfilled Standards 14
23. Used Substances 14
24. Physical Dimensions and Weight 15
25. Installation and Operation Instructions 15
26. Accessories 16
27. Application Notes 17
    - 27.1. Repetitive Pulse Loading 17
    - 27.2. Peak Current Capability 18
    - 27.3. Back-feeding Loads 18
    - 27.4. Charging of Batteries 18
    - 27.5. Output Circuit Breakers 19
    - 27.6. External Input Protection 20
    - 27.7. Parallel Use to Increase Output Power 20
    - 27.8. Parallel Use for Redundancy 20
    - 27.9. Daisy-Chaining of Outputs 21
    - 27.10. Series Operation 21
    - 27.11. Inductive and Capacitive Loads 21
    - 27.12. Operation on Two Phases 22
    - 27.13. Use in a Tightly Sealed Enclosure 22
    - 27.14. Mounting Orientations 23

INTENDED USE

Those responsible for the application and use of the products must satisfy themselves that all necessary steps have been taken to assure that each application and use meets all performance and safety requirements, including and applicable laws, regulation , codes, and standards.

TERMINOLOGY AND ABBREVIATIONS

PE and ⏚ symbol	PE is the abbreviation for **P**rotective **E**arth and has the same meaning as the symbol ⏚.
Earth, Ground	This document uses the term “earth” which is the same as the U.S. term “ground”.
T.b.d.	To be defined, value or description will follow later.
AC 230V	A figure displayed with the AC or DC before the value represents a nominal voltage with standard tolerances (usually ±20%) included. E.g.: DC 12V describes a 12V battery disregarding whether it is full (13.7V) or flat (10V) As long as not otherwise stated, AC 100V and AC 230V parameters are valid at 50Hz and AC 120V parameters are valid at 60Hz mains frequency.
230Vac	A figure with the unit (Vac) at the end is a value without any additional tolerances included.
PELV	Protective Extra Low Voltage
SELV	Safety Extra Low Voltage

DISCLAIMER

The information presented in this document is believed to be accurate and reliable and may change without notice.

No part of this document may be reproduced or utilized in any form without permission in writing from the publisher.

1606- XLS480E & 1606-XLS480EC 24V, 20A ;Single Phase Input

5. AC-INPUT

AC input	nom.	AC 100-240V	wide-range input, , see **Fig. 5-1**
AC input range	min.	85-276Vac	continuous operation
	min.	60-85Vac	full power for 200ms, no damage between 0 and 85Vac
	min.	276-300Vac	< 500ms
Input frequency	nom.	50 – 60Hz	±6%
Turn-on voltage	typ.	77Vac	steady-state value, see **Fig. 5-1**
Shut-down voltage	typ.	73Vac	steady-state value, see **Fig. 5-1**
	typ.	53Vac	dynamical value

		AC 100V	**AC 120V**	**AC 230V**	
Input current	typ.	5.47A	4.56A	2.48A	at 24V, 20A, see **Fig. 5-3**
Power factor *	typ.	0.96	0.95	0.90	at 24V, 20A, see **Fig. 5-4**
Crest factor **	typ.	1.6	1.7	2.05	at 24V, 20A
Start-up delay	typ.	640ms	610ms	660ms	see **Fig. 5-2**
Rise time	typ.	80ms	80ms	80ms	0mF, 24V, 20A, see **Fig. 5-2**
	typ.	85ms	85ms	85ms	20mF, 24V, 20A, see **Fig. 5-2**
Turn-on overshoot	max.	50mV	50mV	50mV	see **Fig. 5-2**

* The power factor is the ratio of the true (or real) power to the apparent power in an AC circuit.
** The crest factor is the mathematical ratio of the peak value to RMS value of the input current waveform.

Fig. 5-1 **Input voltage range**

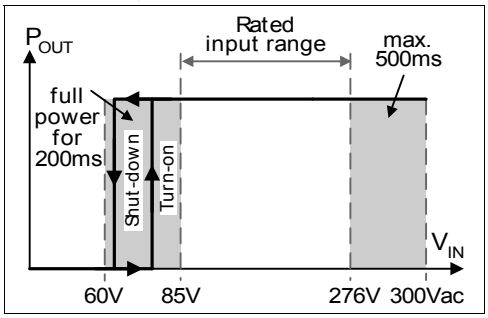

Fig. 5-2 **Turn-on behavior, definitions**

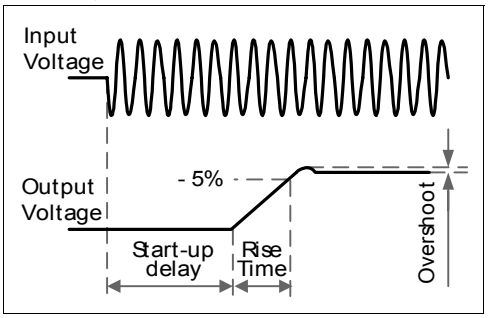

Fig. 5-3 **Input current vs. output load at 24V**

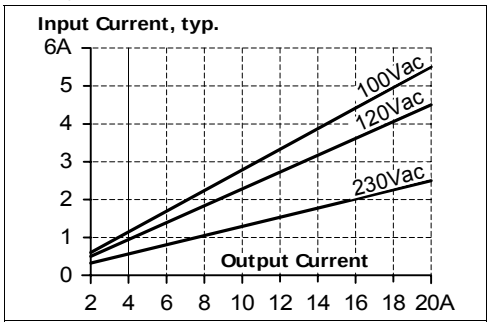

Fig. 5-4 **Power factor vs. output load at 24V**

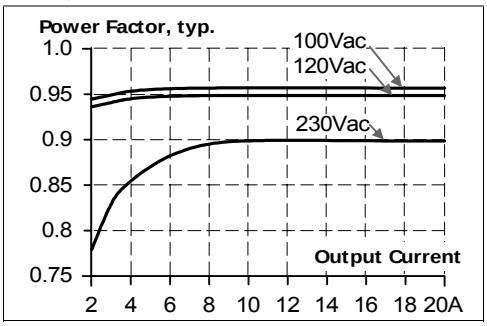

1606- XLS480E & 1606-XLS480EC 24V, 20A ;Single Phase Input

6. Input Inrush Current

An active inrush limitation circuitry limits the input inrush current after turn-on of the input voltage.
The charging current into EMI suppression capacitors is disregarded in the first millisecond after switch-on (EN 61204).

		AC 100V	AC 120V	AC 230V	
Inrush current	max.	$13A_{peak}$	$13A_{peak}$	$13A_{peak}$	-25°C to +70°C, mains interruptions > 750ms
	typ.	$11A_{peak}$	$9A_{peak}$	$7A_{peak}$	-25°C to +70°C, mains interruptions > 750ms
Inrush energy	max.	$5A^2s$	$5A^2s$	$5A^2s$	-25°C to +70°C, mains interruptions > 750ms
Inrush delay	typ.	400ms	400ms	650ms	

Fig. 6-1 **Input inrush current, typical behavior**

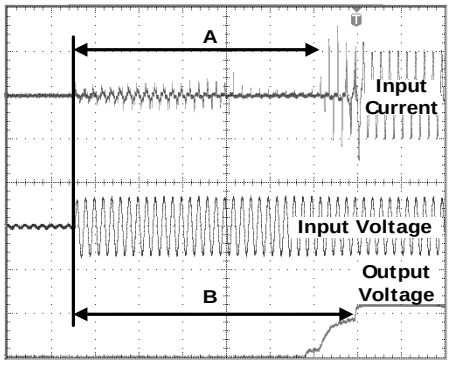

A: Inrush delay
B: Start-up delay

Input: 230Vac
Output: 24V, 20A
Ambient: 25°C

Upper curve: Input current 5A / DIV
Medium curve: Input voltage 500V / DIV
Lower curve: Output voltage 20V / DIV
Time basis: 100ms / DIV

7. DC-Input

DC input	nom.	DC 110-300V	
DC input range	min.	88-375Vdc	continuous operation
DC input current	typ.	4.7A / 1.7A	110Vdc / 300Vdc, 24V, 20A
Turn-on voltage	typ.	74Vdc	steady state value
Shut-down voltage	typ.	69Vdc	steady state value

Fig. 7-1 **Wiring for DC Input**

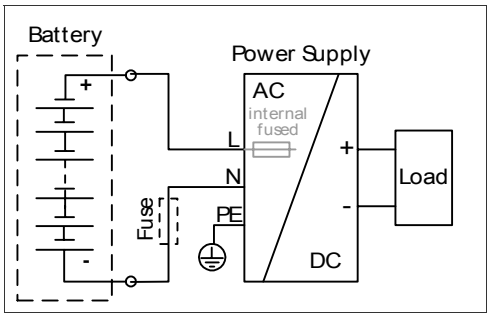

Instructions for DC use:

a) Use a battery or similar DC source.
b) Connect +pole to L and –pole to N.
c) Connect the PE terminal to an earth wire or to the machine ground.

When the –pole of the battery is not connected to earth, use an appropriate fuse to protect the N terminal.

1606- XLS480E & 1606-XLS480EC 24V, 20A ;Single Phase Input

8. OUTPUT

Output voltage	nom.	24V	
Adjustment range	min.	24-28V	guaranteed, multi turn potentiometer
	max.	30V	at clockwise end position of potentiometer
Factory setting		24.1V	±0.2%, at full load, cold unit
Line regulation	max.	10mV	60 to 300Vac
Load regulation	max.	100mV	static value, 0A → 20A → 0A
Ripple and noise voltage	max.	100mVpp	20Hz to 20MHz, 50Ohm
Output capacitance	typ.	8 500µF	

Continuous power capability

Output current	nom.	20A	at 24V, see Fig. 8-1
	nom.	17A	at 28V, see Fig. 8-1
Output power	nom.	480W	24V, continuous
	nom.	480W	28V, continuous
Short-circuit current	min.	30A	load impedance 50mOhm, up to 4s before hiccup mode starts, see Fig 8-1 and Fig. 8-3
	max.	40A	

Power-Boost, short term power capability (up to typ. 4s)

The power supply is designed to support loads with a higher short-term power requirement without damage or shutdown. The short-term duration is hardware controlled by an output power manager. This Power-Boost is repeatedly available. Detailed information can be found in chapter 27.1. If the power supply is loaded longer with the Power-Boost than shown in the Power-Boost time diagram (see Fig 8-2), the max. output power is automatically reduced to 480W.

If the power requirement is continuously above 480W and the voltage falls below approx. 20V (due to the current regulating mode at overload), the unit shuts-off and makes periodical restart attempts. This behavior is called hiccup mode which is described below. If the voltage is above 20V, the unit continuously delivers current.

Hiccup Mode:

Up to 4s of overloading, the power supply delivers continuous output current. After this, the output power is reduced to nearly zero for approx. 17s before a new start attempt is automatically performed. If the overload has been cleared, the device will operate normally. If the overload still exists, the output current will be delivered for 2 to 4s (depending on the overload) again followed by a17 s rest time. This cycle is repeated as long as the overload exists. See Fig. 8-3. During the off-period a small rest voltage and rest current is present on the output.

Output current	nom.	30A	at 24V, see Fig. 8-1
	nom.	26A	at 28V, see Fig. 8-1
Output power	nom.	720W	24V, short term
	nom.	720W	28V, short term
Short-circuit current	min.	30A	load impedance 50mOhm, up to 4s, see Fig. 8-1
	max.	40A	load impedance 50mOhm, up to 4s, see Fig. 8-1
Power-Boost time	typ.	4s	at 24V, 30A, duration until the output voltage dips,
	min	3.5s	see Fig. 8-2
	max.	4.5s	

1606- XLS480E & 1606-XLS480EC 24V, 20A ;Single Phase Input

Fig. 8-1 **Output voltage vs. output current, typ.**

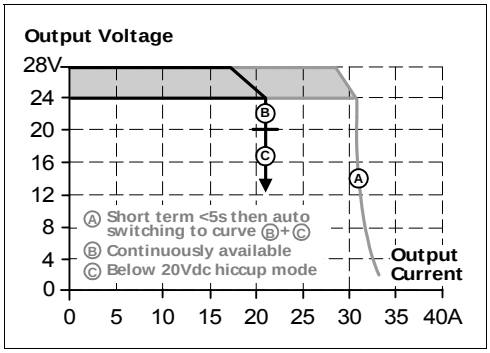

Fig. 8-2 **Power-Boost time vs. output power**

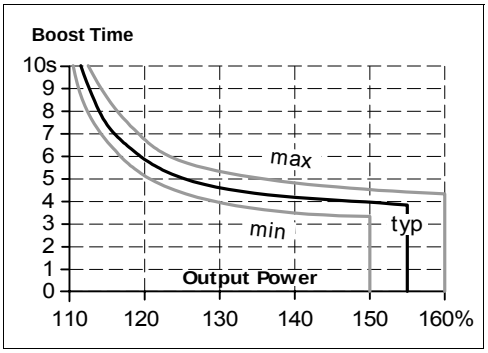

Fig. 8-3 **Short-circuit on output, hiccup mode, typical behavior**

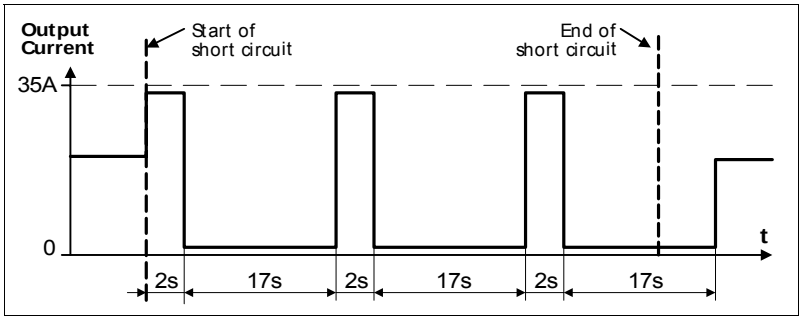

The Power-Boost is available as soon as power comes on and immediately after the end of an output short circuit or output overload.

Fig. 8-4 **Power-Boost after input turn-on**

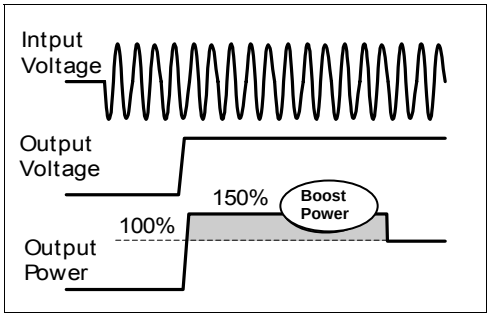

Fig. 8-5 **Power-Boost after output short**

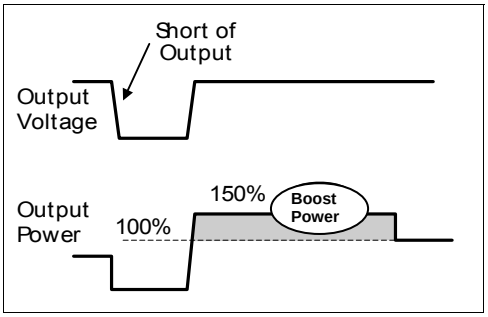

Peak current capability (up to several ms)

The power supply can deliver a peak current which is higher than the specified short term current. This helps to start current demanding loads or to safely operate subsequent circuit breakers.

The extra current is supplied by the output capacitors inside the power supply. During this event, the capacitors will be discharged and causes a voltage dip on the output. Detailed curves can be found in chapter 27.2.

Peak current voltage dips	typ.	from 24V to 19V	at 40A for 20ms
	typ.	from 24V to 18V	at 80A for 2ms
	typ.	from 24V to 17.5V	at 80A for 5ms

1606- XLS480E & 1606-XLS480EC 24V, 20A ;Single Phase Input

9. HOLD-UP TIME

		AC 100V	AC 120V	AC 230V	
Hold-up Time	typ.	32ms	32ms	51ms	20A, 24V, see **Fig. 9-1**
	typ.	64ms	64ms	99ms	10A, 24V, see **Fig. 9-1**

Fig. 9-1 **Hold-up time vs. input voltage**

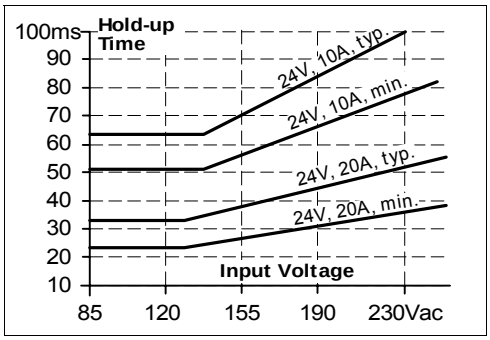

Fig. 9-2 **Shut-down behavior, definitions**

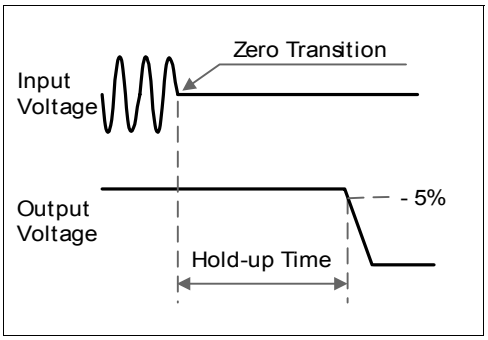

10. DC-OK RELAY CONTACT

This feature monitors the output voltage, which is produced by the power supply itself. It is independent of a back-fed voltage from a unit which is connected in parallel to the power supply output.

Contact closes	As soon as the output voltage reaches the adjusted output voltage.		
Contact opens	As soon as the output voltage dips more than 10% below the adjusted output voltage. Short dips will be extended to a signal length of 250ms. Dips shorter than 1ms will be ignored.		
Contact re-closes	As soon as the output voltage exceeds 90% of the adjusted voltage.		
Contact ratings	max	60Vdc 0.3A, 30Vdc 1A, 30Vac 0.5A	resistive load
	min	1mA at 5Vdc	min. permissible load
Isolation voltage	See dielectric strength table in section 20		

Fig. 10-1 **DC-ok relay contact behavior**

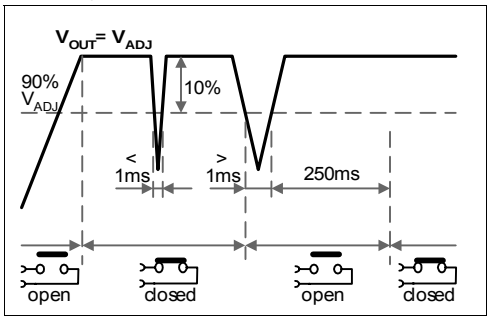

Note:
The DC-ok feature requires that the output voltage reaches the nominal (=adjusted) level after turn-on in order to function according to specification. If this level cannot be achieved, the overload LED will be on and the DC-ok contact will be open. The overload signal will only shut off as soon as the adjusted voltage is reached. This is an important condition to consider particularly, if the load is a battery, the power supply is used in parallel or the power supply is used for N+1 redundant systems.

Restrictions apply when using the DC-OK contact in a Haz-Loc environment:

The DC-OK contact is intended to be used for a separately investigated nonincendive field wiring and/or field wiring apparatus. The apparatus may be located in a Class I, Division 2 (Group A, B, C or D) hazardous (classified) location.

Non associated nonincendive field wiring apparatus shall not be connected in parallel unless this is permitted by the associated nonincendive field wiring apparatus approval.

1606- XLS480E & 1606-XLS480EC 24V, 20A ;Single Phase Input

Selected barriers must have entity parameters such that Voc < V max, Isc < I max, Ca > Ci + Ccable, La > Li + Lcable.

For Ccable and Lcable, if the capacitance per foot or the inductance per foot is not known, then the following values shall be used: Ccable = 60pF/foot and Lcable = 0.2uH/foot.

Fig. 10-2 **DC-ok control drawing for use in Haz-Loc environments**

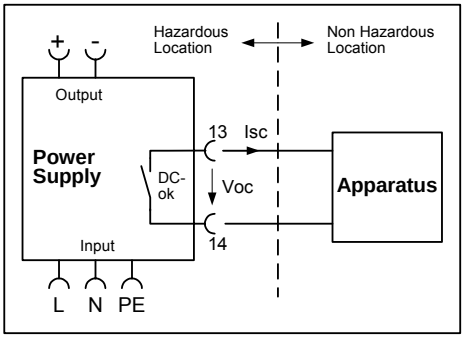

Contact current: I max = 50mA,
Contact voltage: V max. = 35V (DC or AC)
Max. associated circuit capacitance Ca = 100nF
Max. associated circuit inductance La = 20mH
No polarity requirement

11. Efficiency and Power Losses

		AC 100V	AC 120V	AC 230V	
Efficiency	typ.	91.6%	92.4%	93.9%	20A, 24V
Power losses	typ.	44.0W	39.6W	31.4W	20A, 24V
	typ.	9.0W	9.2W	10.0W	0A

Fig. 11-1 **Efficiency vs. output current at 24V**

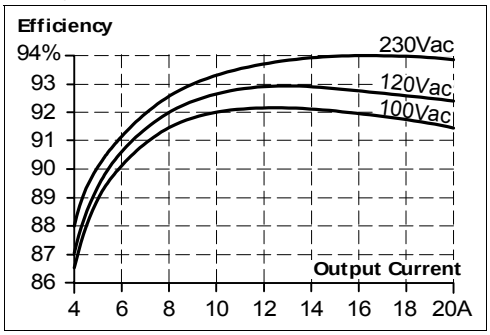

Fig. 11-2 **Losses vs. output current at 24V**

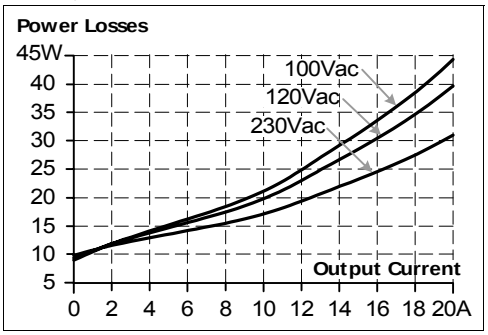

Fig. 11-3 **Efficiency vs. input voltage, 24V, 20A**

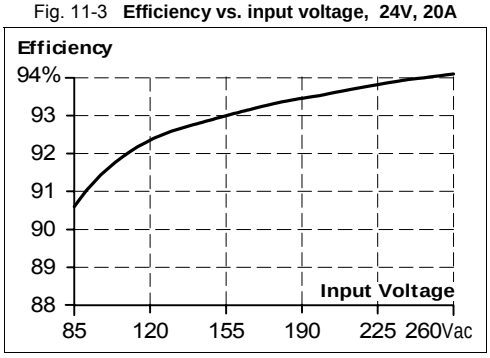

Fig. 11-4 **Losses vs. input voltage, 24V, 20A**

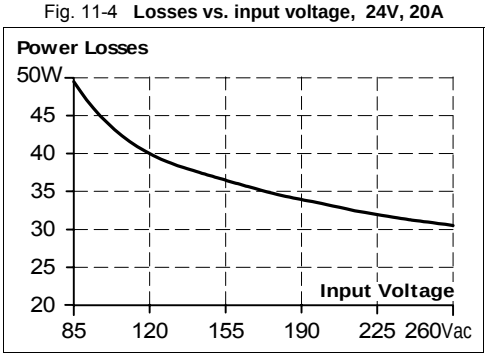

1606- XLS480E & 1606-XLS480EC 24V, 20A ;Single Phase Input

12. Functional Diagram

Fig. 12-1 **Functional diagram**

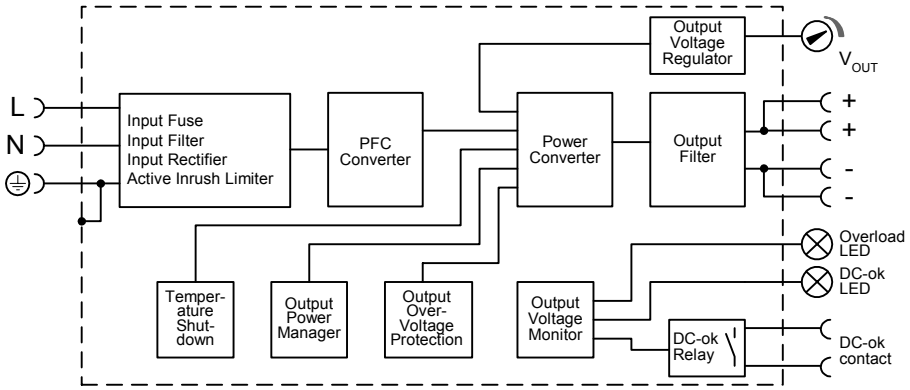

13. Product Face Label

Fig. 13-1 Front side

Output Terminals
Quick-connect spring-clamp terminals, no tools required
+ Positive output pole
- Negative output pole
Dual pins per pole

DC ok Relay contact (NO-contact)

480W Continuous power / 720W Peak power

Input Terminals
Quick-connect spring-clamp terminals, no tools required
N … Neutral input
L … Line (hot) input
⏚ ... PE (Protective Earth)
See chapter 14 "Terminals and Wiring" to choose appropriate wire gauges

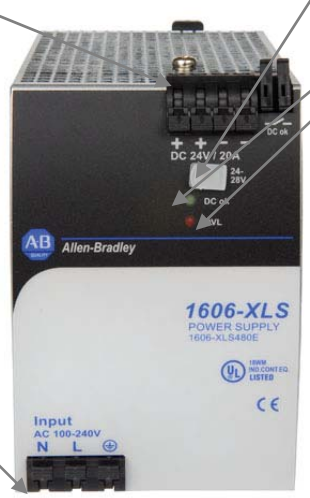

Output voltage potentiometer
(multi turn potentiometer)
Open the flap to tune the output voltage.
Factory setting: 24.1V

DC-ok LED (green)
Overload LED (red)

	Overload LED	DC-ok LED	DC-ok contact
Normal mode	OFF	ON	Closed
Power-Boost mode	OFF	ON	Closed
Overload (V_{OUT} > 90%)	OFF	ON	Closed
Overload (V_{OUT} < 90%)	*)	OFF	Open
Short-circuit (V_{OUT} = ca. 0V)	*)	OFF	Open
Over- temperature	*)	OFF	Open
No input power	OFF	OFF	Open

DC-ok LED and DC-ok contact function synchronized

*) Up to 4s of overloading, the power supply delivers continuous output current. After this, the output power is reduced to nearly zero for approx. 17s before a new start attempt is automatically performed. If the overload has been cleared, the device will operate normally. If the overload still exists, the output current will be delivered for 2 to 4s (depending on the overload) again followed by a 17s rest time. This cycle is repeated as long as the overload exists.

The red overload LED is permanently on when the overload current is continuously flowing. During the 17s rest period, the red LED is flashing with a frequency of approx. 1.3Hz.

1606- XLS480E & 1606-XLS480EC 24V, 20A ;Single Phase Input

14. Terminals and Wiring

Type	Bi-stable, quick-connect spring clamp terminals. IP20 Finger safe construction. Suitable for field- and factory installation. Shipped in open position.
Ferrules	allowed, but not required
Pull-out force	10AWG:80N, 12AWG:60N, 14AWG:50N, 16AWG:40N (according to UL486E)

	Power terminals	**DC-OK-Signal terminals**
Solid wire	0.5-6mm^2	0.3-4mm^2
Stranded wire	0.5-4mm^2	0.3-2.5mm^2
American wire gauge	20-10 AWG	26-12 AWG
Wire stripping length	10mm / 0.4inch	6mm / 0.25inch

Fig. 14-1 **Connecting a wire**

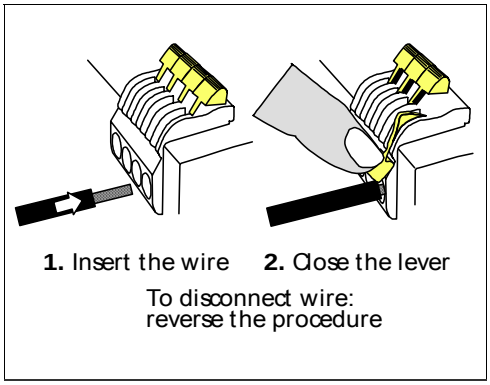

Instructions:

a) Use appropriate copper cables that are designed for an operating temperature of:
60°C for ambient up to 45°C and
75°C for ambient up to 60°C minimum.

b) Follow national installation codes and installation regulations!

c) Ensure that all strands of a stranded wire enter the terminal connection!

d) Up to two stranded wires with the same cross section are permitted in one connection point (except PE wire).

e) Do not use the unit without PE connection.

15. Reliability

		AC 100V	**AC 120V**	**AC 230V**	
Lifetime expectancy	min.	54 000h	59 000h	71 000h	40°C, 24V, 20A
	min.	135 000h	143 000h	164 000h	40°C, 24V, 10A
	min.	153 000h	165 000h	15 years	25°C, 24V, 20A
MTBF SN 29500, IEC 61709		407 000h	441 000h	469 000h	40°C, 24V, 20A
		749 000h	799 000h	840 000h	25°C, 24V, 20A
MTBF MIL HDBK 217F		204 000h	215 000h	229 000h	40°C, 24V, 20A, Ground Benign GB40
		273 000h	288 000h	308 000h	25°C, 24V, 20A, Ground Benign GB25

The **Lifetime expectancy** shown in the table indicates the operating hours (service life) and is determined by the lifetime expectancy of the built-in electrolytic capacitors.

Lifetime expectancy is specified in operational hours. Lifetime expectancy is calculated according to the capacitor's manufacturer specification. The prediction model allows a calculation of up to 15 years from date of shipment.

MTBF stands for **M**ean **T**ime **B**etween **F**ailure, which is calculated according to statistical device failures, and indicates reliability of a device. It is the statistical representation of the likelihood of the unit to fail and does not necessarily represent the life of a product.

1606- XLS480E & 1606-XLS480EC 24V, 20A ;Single Phase Input

16. EMC

The power supply is suitable for applications in industrial environment as well as in residential, commercial and light industry environment without any restrictions. The CE mark indicates conformance with EMC directive 89/336/EC, 93/68/EC and 2004/108/EC and the low-voltage directive (LVD) 73/23/EC, 93/68/EC, 2006/95/EC.

EMC Immunity	EN 61000-6-1 EN 61000-6-2		Generic standards	
Electrostatic discharge	EN 61000-4-2	Contact discharge Air discharge	8kV 15kV	Criterion A Criterion A
Electromagnetic RF field	EN 61000-4-3	80MHz-1GHz	10V/m	Criterion A
Fast transients (Burst)	EN 61000-4-4	Input lines Output lines	4kV 2kV	Criterion A Criterion A
Surge voltage on input	EN 61000-4-5	L → N N / L → PE	2kV 4kV	Criterion A Criterion A
Surge voltage on output	EN 61000-4-5	+ → - + / - → PE	500V 500V	Criterion A Criterion A
Conducted disturbance	EN 61000-4-6	0.15-80MHz	10V	Criterion A
Mains voltage dips	EN 61000-4-11	0% of 100Vac 40% of 100Vac 70% of 100Vac	0Vac, 20ms 40Vac, 200ms 70Vac, 500ms	Criterion A Criterion C Criterion C
Voltage interruptions	EN 61000-4-11		0Vac, 5000ms	Criterion C
Voltage sags	SEMI F47 0200		96Vac, 1000ms 84Vac, 500ms 60Vac, 200ms	Criterion A Criterion A Criterion A
Input voltage swells	RA internal standard		300Vac, 500ms	Criterion A
Powerful transients	VDE 0160	over entire load range	750V, 1.3ms	Criterion C

Criterions:
A: Power supply shows normal operation behavior within the defined limits.
C: Temporary loss of function is possible. Power supply might shut-down and restarts by itself. No damages or hazards for the power supply occur.

EMC Emission	Generic standards: EN 61000-6-3 and EN 61000-6-4	
Conducted emission	EN 55011, EN 55022, FCC Part 15, CISPR 11, CISPR 22	Class B, input lines
	EN 55022	Class B, output lines
Radiated emission	EN 55011, EN 55022	Class B
Harmonic input current	EN 61000-3-2	Fulfilled, active PFC
Voltage fluctuations, flicker	EN 61000-3-3	Fulfilled

This device complies with FCC Part 15 rules.
Operation is subjected to following two conditions: (1) this device may not cause harmful interference, and (2) this device must accept any interference received, including interference that may cause undesired operation.

Switching Frequencies	The power supply has four converters with four different switching frequencies included. One is nearly constant. The others are input voltage and load dependent.	
Switching frequency 1	100kHz	Resonant converter, nearly constant
Switching frequency 2	110kHz to 500kHz	Boost converter, input voltage and load dependent
Switching frequency 3	73kHz to 114kHz	PFC converter, input voltage and load dependent
Switching frequency 4	35-45kHz	Aux. Converter, input voltage and load dependent

1606- XLS480E & 1606-XLS480EC 24V, 20A ;Single Phase Input

17. ENVIRONMENT

Operational temperature	-25°C to +70°C (-13°F to 158°F)	reduce output power above +60°C
Output de-rating	12W/°C	60-70°C (140°F to 158°F), see **Fig. 17-1**
Storage temperature	-40 to +85°C (-40°F to 185°F)	storage and transportation
Humidity	5 to 95% r.H.	IEC 60068-2-30 Do not energize while condensation is present
Vibration sinusoidal	2-17.8Hz: ±1.6mm; 17.8-500Hz: 2g 2 hours / axis	IEC 60068-2-6
Vibration random	$0.5m^2(s^3)$ 2 hours / axis	IEC 60068-2-64
Shock	30g 6ms, 20g 11ms 3 bumps / direction, 18 bumps in total	IEC 60068-2-27
Altitude	0 to 6000m (0 to 20 000ft)	Reduce output power or ambient temperature above 2000m sea level.
Output de-rating (for altitude)	30W/1000m or 5°C/1000m	above 2000m (6500ft), see **Fig. 17-2**
Over-voltage category	III II	EN 50178, altitudes up to 2000m Altitudes from 2000m to 6000m
Degree of pollution	2	EN 50178, not conductive

Fig. 17-1 **Output current vs. ambient temp.,**

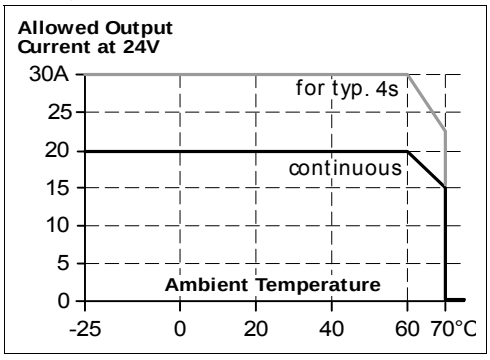

Fig. 17-2 **Output current vs. altitude**

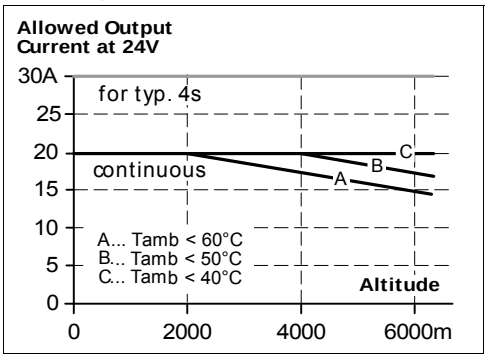

The ambient temperature is defined as the air temperature 2cm below the unit.

1606- XLS480E & 1606-XLS480EC 24V, 20A ;Single Phase Input

18. Protection Features

Output protection	Electronically protected against overload, no-load and short-circuits	
Output over-voltage protection	typ. 32Vdc max. 37Vdc	In case of an internal power supply defect, a redundant circuitry limits the maximum output voltage. The output shuts down and automatically attempts to restart.
Output over-current protection	Electronically limited	See Fig 8-1
Degree of protection	IP 20	EN/IEC 60529
Penetration protection	> 3.5mm / >5mm	top side / bottom side, e.g. screws, small parts
Over-temperature protection	yes	output shut-down with automatic restart
Input transient protection	MOV (Metal Oxide Varistor)	
Internal input fuse	T10A H.B.C.	not user replaceable

Note: In case of a protection event, audible noise may occur.

19. Safety

Input / output separation	SELV PELV double or reinforced insulation	IEC/EN 60950-1 EN 60204-1, EN 50178, IEC 60364-4-41
Class of protection	I	PE (Protective Earth) connection required
Isolation resistance	> 5MOhm	input to output, 500Vdc
PE resistance	< 0.1Ohm	between housing and PE terminal
Touch current (leakage current)	typ. 0.23mA typ. 0.34mA typ. 0.58mA < 0.31mA < 0.45mA < 0.80mA	100Vac, 50Hz, TN mains 120Vac, 60Hz, TN mains 230Vac, 50Hz, TN mains 110Vac, 50Hz, TN mains 132Vac, 60Hz, TN mains 264Vac, 50Hz, TN mains

20. Dielectric Strength

⚠WARNING

To fulfill the PELV requirements according to EN60204-1 § 6.4.1, we recommend that either the + pole, the – pole or any other part of the output circuit shall be connected to the protective earth system. This helps to avoid situations in which a load starts unexpectedly or can not be switched off any more when unnoticed earth faults occur.

Fig. 20-1 **Dielectric strength**

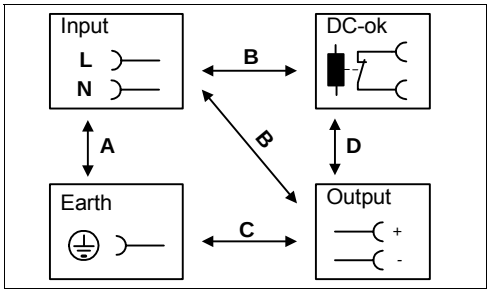

		A	B	C	D
Type test	60s	2500Vac	3000Vac	500Vac	500Vac
Factory test	5s	2500Vac	2500Vac	500Vac	500Vac
Field test	5s	2000Vac	2000Vac	500Vac	500Vac

Type tests and factory tests:
Conducted by the manufacturer. Do not repeat test in field!
Rules for field test:
Use appropriate test equipment which applies the voltage with a slow ramp! Connect L and N together as well as all output poles.

The output voltage is floating and has no ohmic connection to ground.

1606- XLS480E & 1606-XLS480EC 24V, 20A ;Single Phase Input

21. APPROVALS

IEC 60950-1	IECEE CB SCHEME	CB Scheme, Information Technology Equipment
UL 508	c UL US LISTED IND. CONT. EQ.	LISTED E198865 listed for use in U.S.A. (UL 508) and Canada (C22.2 No. 14-95) Industrial Control Equipment
UL 60950-1	c UL us	RECOGNIZED E137006 recognized for the use in U.S.A. (UL 60950-1) and Canada (C22.2 No. 60950) Information Technology Equipment, Level 5
UL 1604	c UL us	RECOGNIZED E246877 recognized for use in U.S.A. (UL 1604) and Canada (C22.2 No. 213-M1987) Hazardous Location Class I Div 2 T4 Groups A,B,C,D and Class I Zone 2 Groups IIA, IIB and IIC
	The unit is suitable for use in Class I Division 2 Groups A, B, C, D locations as well as for Class I Zone 2 Groups IIA, IIB and IIC locations. Substitution of components may impair suitability for Class I Division 2 environment. Do not disconnect equipment unless power has been switched off. Wiring must be in accordance with Class I, Division 2 wiring methods of the National Electrical Code, NFPA 70, and in accordance with other local or national codes.	
SEMI F47	SEMI F47 PEAC	SEMI F47-0200 Power Quality Star Ride-through compliance for semiconductor industry. Full SEMI range compliance (Input: 120Vac or 208Vac, output: 240W)

22. FULFILLED STANDARDS

EN 61558-2-17	Safety of Power Transformers
EN/IEC 60204-1	Safety of Electrical Equipment of Machines
EN/IEC 61131-2	Programmable Controllers
EN 50178, IEC 62103	Electronic Equipment in Power Installations

23. USED SUBSTANCES

The unit does not release any silicone and is suitable for the use in paint shops.

The unit conforms to the RoHS directive 2002/96/EC

Electrolytic capacitors included in this unit do not use electrolytes such as Quaternary Ammonium Salt Systems.

Plastic housings and other molded plastic materials are free of halogens.

The production material within our production does not include following toxic chemicals:
Polychlorized Biphenyl (PCB), Polychlorized Terphenyl (PCT), Pentachlorophenol (PCP), Polychlorinated naphthalene (PCN), Polybrom Biphenyll (PBB), Polybrom Bipheny-oxyd (PBO), Polybrominated Diphenylether (PBDE), Polychlorinated Diphenylether (PCDE), Polydibromphenyl Oxyd (PBDO), Cadmium, Asbest, Mercury, Silicia

1606- XLS480E & 1606-XLS480EC 24V, 20A ;Single Phase Input

24. Physical Dimensions and Weight

Weight	1200g / 2.65lb
DIN-Rail	Use 35mm DIN-rails according to EN 60715 or EN 50022 with a height of 7.5 or 15mm. The DIN-rail height must be added to the depth (127mm) to calculate the total required installation depth.

Fig. 24-1 **Front view**

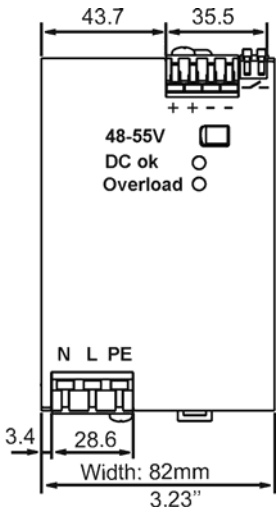

Fig. 24-2 **Side view**

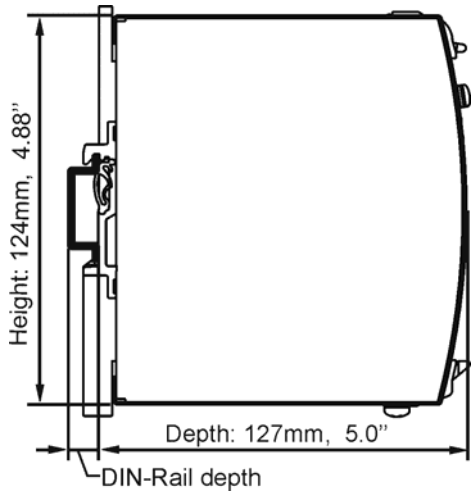

25. Installation and Operation Instructions

⚠WARNING

Hazardous voltage inside device. Risk of electric shock, severe burns, or death.

- Do not use the unit without proper earth connection (Protective Earth). Use the pin on the terminal block for earth connection and not one of the screws on the housing.
- Turn power off before working on the power supply. Protect against inadvertent re-powering.
- Make sure the wiring is correct by following all local and national codes.
- Do not open, modify or repair the unit.
- Use caution to prevent any foreign objects from entering into the housing.
- Do not use in wet locations or in areas where moisture or condensation can be expected.

Mounting and installation:
Output terminal must be located on top and input terminal on the bottom. For other orientations see section 27.14. An appropriate electrical and fire end-product enclosure needs to be considered in the end use application.

Cooling:
Convection cooled, no forced cooling required. Do not cover ventilation grid (e.g. cable conduits) by more than 30%!

Installation clearances:
40mm on top, 20mm on the bottom, 5mm on the left and right side are recommended when loaded permanently with full power. In case the adjacent device is a heat source, 15mm clearance is recommended.

Service parts:
The unit does not contain any serviceable parts. The tripping of an internal fuse is caused by an internal defect.

1606- XLS480E & 1606-XLS480EC 24V, 20A ;Single Phase Input

26. ACCESSORIES

1606-XLB Wall mounting bracket

This bracket is used to mount Dimension units onto a flat surface without utilizing a DIN-Rail. The two aluminum brackets and the black plastic slider of the unit have to be detached, so that the two steel brackets can be mounted.

Fig. 26-1 **1606-XLB Wall Mounting Bracket**

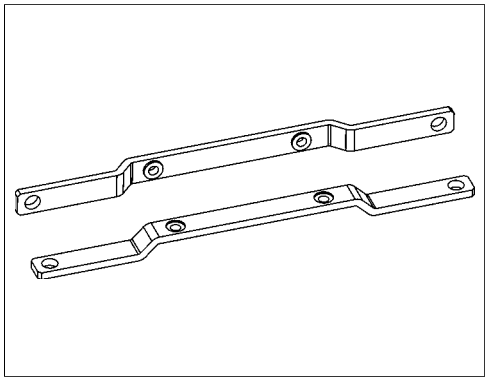

Fig. 26-2 **Assembled Wall Mounting Bracket**

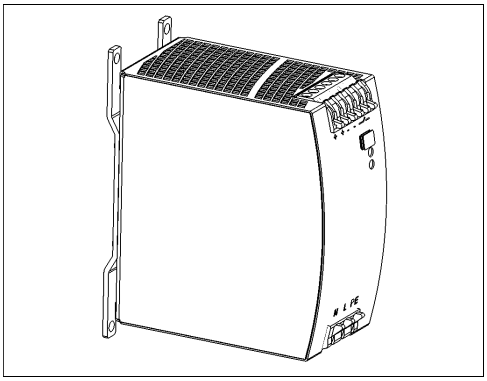

Please note: Symbolic drawing, picture show a different model

27. Application Notes

27.1. Repetitive Pulse Loading

Typically, a load current is not constant. It varies over time. For pulse load compatibility, following rules must be met:

a) The pulse power demand must be below 150% of the nominal power.
b) The duration of the pulse power must be shorter than the allowed Power-Boost Time. (see output section)
c) The average (R.M.S.) output current must be below the specified continuous output current.
If the R.M.S. current is higher, the unit will respond with a thermal shut-down after a while. Use the max. duty cycle curve (Fig. 27-2) to check if the average output current is below the nominal current.
d) For altitudes higher than 2000m reduce the pulse loading (30W/1000m) or the ambient temperature (5°C/1000m)

Fig. 27-1 **Repetitive pulse loads, definitions**

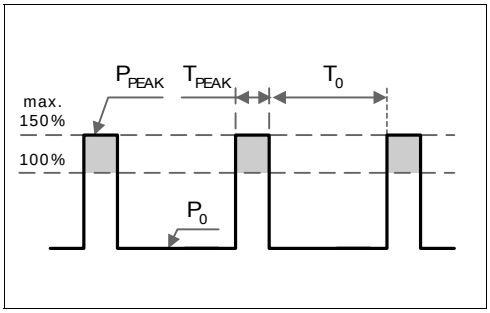

Fig. 27-2 Max. Duty Cycle Curve

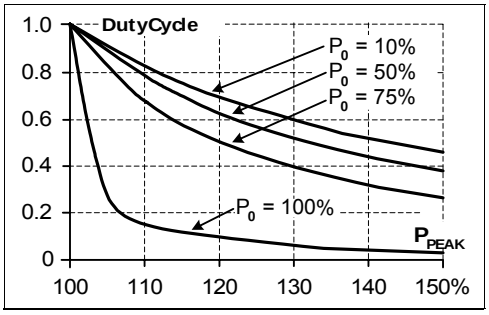

P_0 Base load (W)
P_{PEAK} Pulse load (above 100%)
T_0 Duration between pulses (s)
T_{PEAK} Pulse duration (s)

$$\text{DutyCycle} = \frac{T_{peak}}{T_{peak} + T_0}$$

$$T_0 = \frac{T_{peak} - (\text{DutyCycle} \times T_{peak})}{\text{DutyCycle}}$$

Utilizing the Max. Duty Cycle Curve:

Example to determine the repetition rate of pulses without dipping of the output voltage:

Parameters of application:

Pulse length is T_{PEAK} = 1s

Steady state load P_0=120W (= 50% of I_{RATED})

Peak load P_{PEAK} = 360W (= 150% of I_{RATED})

Determining the repetition rate:

1) make a vertical line at P_{PEAK} = 150%
2) make a horizontal line where the vertical line crosses the P_0 = 50% curve
3) Read the Max. Duty Cycle from the Duty Cycle-axis (= 0.37)
4) Calculate the min. pause (base load) length T_0 :

$$T_0 = \frac{T_{peak} - (\text{DutyCycle} \times T_{peak})}{\text{DutyCycle}} = \frac{1s - (0.37 \times 1s)}{0.37} = \underline{\mathbf{1.7s}}$$

5) Pulse length = 1s, min. pause length = 1.7s
6) Max. repetition rate = pulse length +pause length = **2.7s**

More examples for pulse load compatibility:

P_{PEAK}	P_0	T_{PEAK}	T_0
720W	480W	1s	>25s
720W	0W	1s	>1.3s
600W	240W	1s	> 0.75s

P_{PEAK}	P_0	T_{PEAK}	T_0
720W	240W	0.1s	>0.16s
720W	240W	1s	>1.6s
720W	240W	3s	>4.9s

1606- XLS480E & 1606-XLS480EC 24V, 20A ;Single Phase Input

27.2. Peak Current Capability

Solenoids, contactors and pneumatic modules often have a steady state coil and a pick-up coil. The inrush current demand of the pick-up coil is several times higher than the steady state current and usually exceeds the nominal output current (including the Power-Boost) The same situation applies, when starting a capacitive load.

Branch circuits are often protected with circuit breakers or fuses. In case of a short or an overload in the branch circuit, the fuse needs a certain amount of over-current to trip or to blow. The peak current capability ensures the safe operation of subsequent circuit breakers.

Assuming the input voltage is turned on before such an event, the built-in large sized output capacitors inside the power supply can deliver extra current. Discharging this capacitor causes a voltage dip on the output. The following two examples show typical voltage dips:

Fig. 27-3 **Peak load 40A for 50ms, typ.**

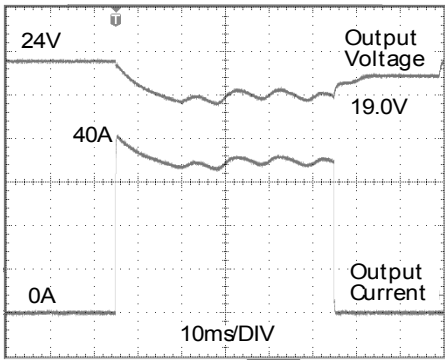

Peak load 40A (resistive) for 50ms
Output voltage dips from 24V to 19.0V.

Fig. 27-4 **Peak load 80A for 5ms, typ.**

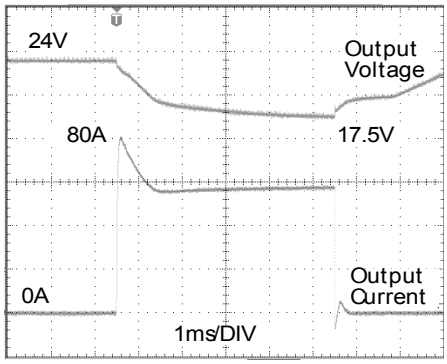

Peak load 80A (nearly resistive) for 5ms
Output voltage dips from 24V to 17.5V.

Please note: The DC-OK relay triggers when the voltage dips more than 10% for longer than 1ms.

27.3. Back-feeding Loads

Loads such as decelerating motors and inductors can feed voltage back to the power supply. This feature is also called return voltage immunity or resistance against Back- E.M.F. (Electro Magnetic Force).

This power supply is resistant and does not show malfunctioning when a load feeds back voltage to the power supply. It does not matter, whether the power supply is on or off.

The maximum allowed feed back voltage is 34Vdc. The absorbing energy can be calculated according to the built-in large sized output capacitor which is specified in chapter 8. If the feed back voltage gets higher than 34Vdc, the power supply responds with a shut-down and a subsequent start-up attempt.

27.4. Charging of Batteries

The power supply can be used for float-charging of lead-acid or maintenance free 24V VRLA batteries.

Instructions for charging batteries:

a) Set the output voltage, at disconnected load, very precisely to the end-of-charge voltage according to the expected battery temperature.

End-of-charge voltage	27.8V	27.5V	27.15V	26.8V
Battery temperature	10°C	20°C	30°C	40°C

b) Use a 25A circuit breaker (or blocking diode) between the power supply and the battery.

c) Ensure that the output current of the power supply is below the allowed charging current of the battery.

d) Use only matched batteries when putting 12V types in series.

e) The return current to the power supply is typ. 9mA at 25Vdc when the power supply is switched off.

1606- XLS480E & 1606-XLS480EC 24V, 20A ;Single Phase Input

27.5. Output Circuit Breakers

Standard miniature circuit breakers (MCBs) can be used for branch protection. Ensure that the MCB is rated for DC voltage, too. The following tests show which circuit breakers the power supply typically trips.

Circuit breakers have huge tolerances in their tripping behavior. Therefore, these typical tests can only be used as a recommendation or for comparing two different power supplies. Furthermore, the loop impedance has a major influence on whether a breaker trips or not. Two tests were performed, representing typical situations:

Test 1: Short circuit with S1 on the power supply end of the cable (loop impedance approx. 20mOhm)

Fig. 27-5 **Branch protectors, test circuit 1**

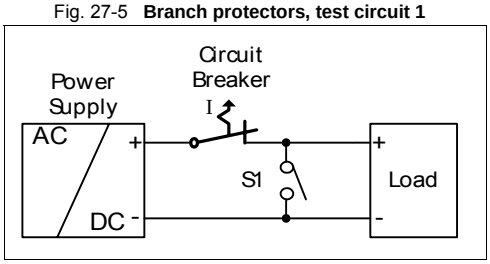

Parameters:

Input voltage: 230Vac, load current: 0A
Tripping time shorter than 5s.

The following circuit breaker tripped during the test:

A- or **Z**- Characteristic:: equal or smaller 25A *)
B- Characteristic: equal or smaller 20A *)
C- Characteristic: equal or smaller 13A *)

Test 2: Short circuit with S1 on the load end (additional impedance included; represents longer load wire length).

Fig. 27-6 **Branch protectors, test circuit 2**

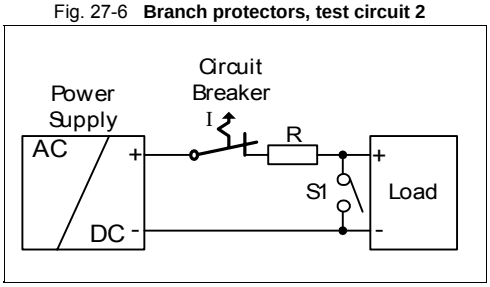

Parameters:

Input voltage: 230Vac, load current: 0A
Tripping time shorter than 5s.

The following circuit breaker tripped during the test:

A- or **Z**- Characteristic:: ≤ 20A and R< 82mOhm *)
B- Characteristic: ≤ 13A and R< 120mOhm *)
C- Characteristic: ≤ 8A and R< 150mOhm *)

What does this resistance mean in wire length?

	0.5mm²	0.7mm²	1.0mm²	1.5mm²	2.5mm²	4.0mm²
82mOhm	2.3m	3.2m	4.6m	6.9m	11.4m	18.3m
120mOhm	3.3m	4.7m	6.7m	10.0m	16.7m	26.7m
150mOhm	4.2m	5.9m	8.4m	12.5m	20.9m	33.4m

*) A list of the circuit breakers under test is available on request.

Example:
Which wire gauge must be used to trip a C-Characteristic circuit breaker with a rating of 8A? The load wire length is 19m.

Answer: A 8A C-Characteristic circuit breaker requires a loop impedance of less than 150mOhm (test results). The wire length table shows that up to 20.9m wire with a cross section of 2.5mm² are below 150mOhm. A wire not smaller than 2.5mm² shall be used.

1606- XLS480E & 1606-XLS480EC 24V, 20A ;Single Phase Input

27.6. External Input Protection

The unit is tested and approved for branch circuits up to 20A. External protection is only required, if the supplying branch has an ampacity greater than this. In some countries local regulations might apply. Check also local codes and local requirements.

If an external fuse is necessary or utilized, a minimum value is required to avoid undesired tripping of the fuse.

		B-Characteristic	C-Characteristic
Ampacity	max.	20A	20A
	min.	10A	10A

27.7. Parallel Use to Increase Output Power

Power supplies can be paralleled to increase the output power.

Fig. 27-7 **Schematic for parallel operation**

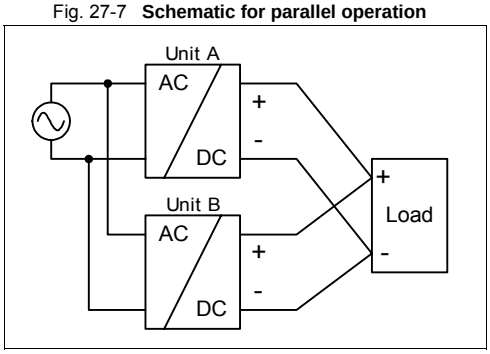

Instructions for parallel use:

a) Use only power supplies from the same series (XLS).
b) Adjust the output voltages of all power supplies to approximately the same value (±500mV).
Otherwise, the DC-ok signal might not work properly.
c) A fuse (or diode) on the output is only required if more than three units are connected in parallel.
d) Do not continuously load the terminals with more than 25A. Follow wiring instructions according to chapter 27.9
e) Keep an installation clearance of 15mm (left/right) between two power supplies and avoid installing the power supplies on top of each other.

27.8. Parallel Use for Redundancy

Power supplies can be paralleled for redundancy to gain a higher system availability. Redundant systems require a certain amount of extra power to support the load in case one power supply unit fails. The simplest way is to put two XLS power supplies in parallel. This is called a 1+1 redundancy. In case one power supply unit fails, the other one is automatically able to support the load current without any interruption. Redundant systems for a higher power demand are usually built in a N+1 method. E.g. Five power supplies, each rated for 10A are paralleled to build a 40A redundant system.

Please note: This simple way to build a redundant system does not cover failures such as an internal short circuit in the secondary side of the power supply. In such a - virtually nearly impossible - case, the defect unit becomes a load for the other power supplies and the output voltage can not be maintained any more. This can only be avoided by utilizing decoupling diodes which are included in the redundancy module 1606-XLSRED. (One Diode module per power supply)

Recommendations for building redundant power systems:

a) Use separate input fuses for each power supply.
b) Monitor the individual power supply units. A DC-ok LED and a DC-ok contact is already included in the units. This feature reports a faulty unit.
c) When possible, connect each power supply to different phases or circuits.
d) It is desirable to set the output voltages of all power supplies to the same value to avoid a false DC-ok signal.

1606- XLS480E & 1606-XLS480EC 24V, 20A ;Single Phase Input

27.9. Daisy-Chaining of Outputs

Daisy chaining (jumping from one power supply output to the next) is allowed as long as the max. current through one terminal pin does not continuously exceed 20A. If the current is higher, use a separate distribution terminal.

Fig. 27-8 **Daisy chaining of outputs**

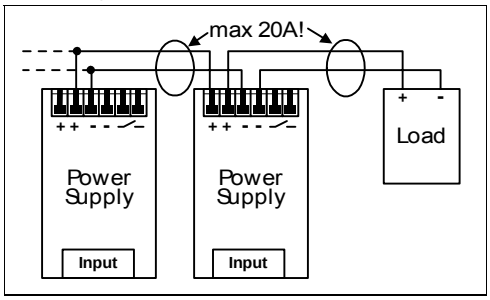

Fig. 27-9 **Using distribution terminals**

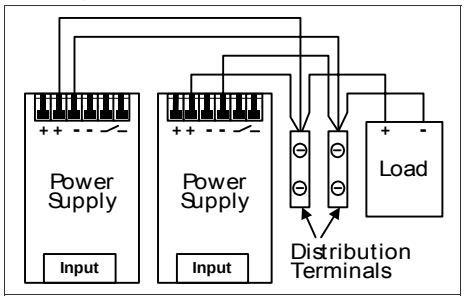

27.10. Series Operation

The power supply can be put in series to increase the output voltage.

Fig. 27-10 **Schematic for series operation**

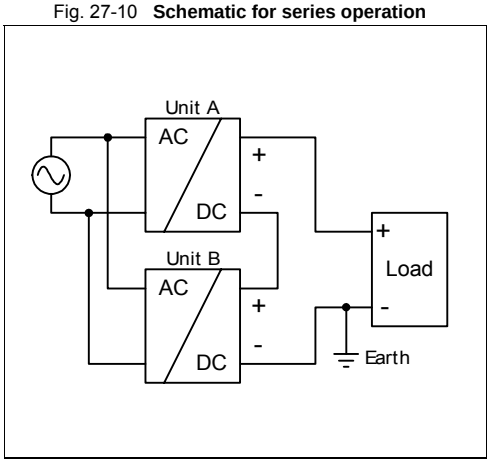

Instructions for use in series:

a) It is possible to connect as many units in series as needed, providing the sum of the output voltage does not exceed 150Vdc.

b) **Warning !** Voltages with a potential above 60Vdc are not SELV any more and can be dangerous. Such voltages must be installed with a protection against touching.

c) For serial operation use power supplies of the same type.

d) Earthing of the output is required when the sum of the output voltage is above 60Vdc.

e) Keep an installation clearance of 15mm (left/right) between two power supplies and avoid installing the power supplies on top of each other.

Note: Avoid return voltage (e.g. from a decelerating motor or battery) which is applied to the output terminals.

27.11. Inductive and Capacitive Loads

The unit is designed to supply any kind of load, including unlimited capacitive and inductive loads.

1606- XLS480E & 1606-XLS480EC 24V, 20A ;Single Phase Input

27.12. Operation on Two Phases

Fig. 27-11 **Schematic for two phase operation**

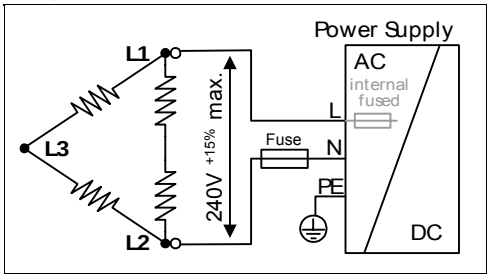

Instructions for two phase operation:

a) A phase to phase connection is allowed as long as the supplying voltage is below 240V(15%).

b) Use a fuse or a circuit breaker to protect the N input. The N input is internally not protected and is in this case connected to a hot wire.

Appropriate fuses or circuit breakers are specified in section 27.6 “External Input Protection”.

27.13. Use in a Tightly Sealed Enclosure

When the power supply is installed in a tightly sealed enclosure, the temperature inside the enclosure will be higher than outside. The inside temperature defines the ambient temperature for the power supply.

Results from such an installation:

Power supply is placed in the middle of the box, no other heat producer inside the box

Enclosure:	Type IP66 Box PK 9522 100, plastic, 254x180x165mm
Load:	24V, 16A; (=80%) load is placed outside the box
Input:	230Vac
Temperature inside enclosure:	49.2°C (in the middle of the right side of the power supply with a distance of 2cm)
Temperature outside enclosure:	24.4°C
Temperature rise:	24.8°C

1606- XLS480E & 1606-XLS480EC 24V, 20A ;Single Phase Input

27.14. MOUNTING ORIENTATIONS

Mounting orientations other than input terminals on the bottom and output on the top require a reduction in continuous output power or a limitation in the max. allowed ambient temperature. The amount of reduction influences the lifetime expectancy of the power supply. Therefore, two different derating curves for continuous operation can be found below:

Curve A1 Recommended output current.
Curve A2 Max allowed output current (results approx. in half the lifetime expectancy of A1).

Fig. 27-12
Mounting Orientation A
Standard Orientation

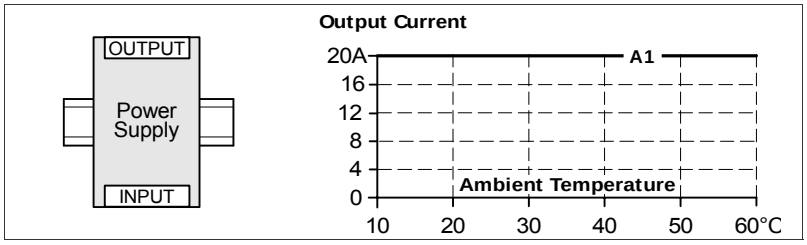

Fig. 27-13
Mounting Orientation B
(Upside down)

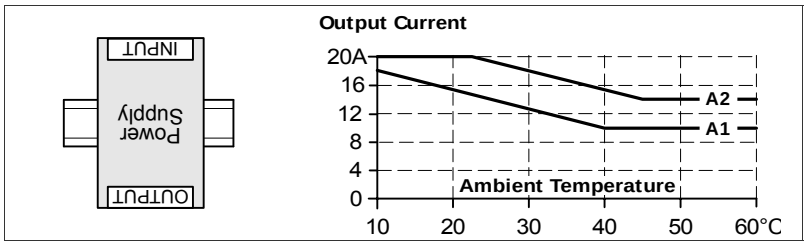

Fig. 27-14
Mounting Orientation C
(Table-top mounting)

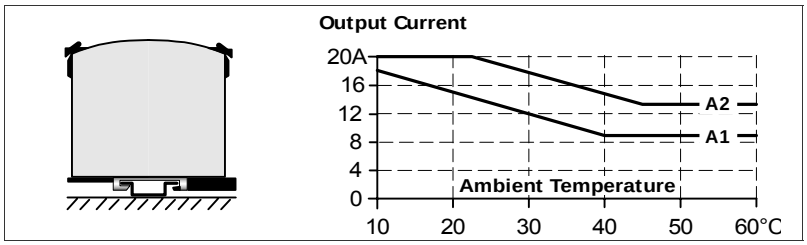

Fig. 27-15
Mounting Orientation D
(Horizontal cw)

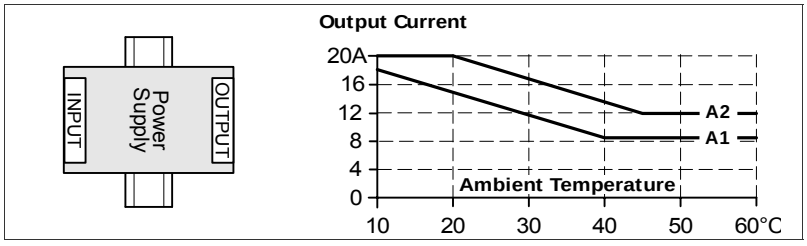

Fig. 27-16
Mounting Orientation E
(Horizontal ccw)

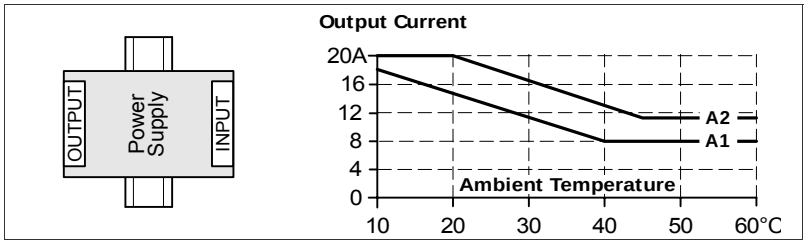

THIS PAGE WAS INTENTIONALLY LEFT BLANK